SOT-227 Power Module
Single Switch - Power MOSFET, 270 A

SOT-227

PRIMARY CHARACTERISTICS	
V_{DSS}	200 V
$R_{DS(on)}$	3.3 mΩ
I_D	219 A at 90 °C
Type	Modules - MOSFET
Package	SOT-227

FEATURES

- I_D = 287 A, T_C = 25 °C
- ThunderFET power MOSFET
- Reduced switching and conduction losses
- Maximum 175 °C junction temperature
- UL approved file E78996
- Material categorization: for definitions of compliance please see www.vishay.com/doc?99912

Pb-free
RoHS COMPLIANT

APPLICATIONS

- DC/DC conversions
- Motor drives switch
- DC/AC inverter
- Power supplies
  - Uninterruptible power supplies
  - AC/DC switchmode power supplies
  - Solar micro inverter

ABSOLUTE MAXIMUM RATINGS				
PARAMETER	**SYMBOL**	**TEST CONDITIONS**	**MAX.**	**UNITS**
MOSFET				
Drain to source voltage	V_{DSS}		200	V
Continuous drain current, V_{GS} at 10 V	I_D	T_C = 25 °C	287	A
		T_C = 90 °C	219	
Pulsed drain current	I_{DM} (1)		680	
Power dissipation	P_D	T_C = 25 °C	937	W
Gate to source voltage	V_{GS}		± 20	V
Single pulse avalanche energy (2)	E_{AS}	T_C = 25 °C, L = 0.1 mH, V_{GS} = 10 V	650	mJ
Avalanche current	I_{AS}		180	A
MODULE				
Operating junction temperature range	T_J		-55 to +175	°C
Operating storage temperature range	T_{Stg}		-40 to +150	
Insulation voltage (RMS)	V_{ISOL}	Any terminal to case, t = 1 min	2500	V

Notes

(1) Limited at max. junction temperature
(2) Duty cycle ≤ 1 %

For technical questions within your region: DiodesAmericas@vishay.com, DiodesAsia@vishay.com, DiodesEurope@vishay.com
THIS DOCUMENT IS SUBJECT TO CHANGE WITHOUT NOTICE. THE PRODUCTS DESCRIBED HEREIN AND THIS DOCUMENT ARE SUBJECT TO SPECIFIC DISCLAIMERS, SET FORTH AT www.vishay.com/doc?91000

THERMAL - MECHANICAL SPECIFICATIONS							
PARAMETER		**SYMBOL**	**TEST CONDITIONS**	**MIN.**	**TYP.**	**MAX.**	**UNITS**
Operating junction temperature range		T_J		-55	-	175	°C
Operating storage temperature range		T_{Stg}		-40	-	150	
Junction to case	MOSFET	R_{thJC}		-	-	0.16	°C/W
Case to heatsink	Module	R_{thCS}	Flat, greased surface	-	0.1	-	
Weight				-	30	-	g
Mounting torque			Torque to terminal	-	-	1.1 (9.7)	Nm (lbf. in)
			Torque to heatsink	-	-	1.8 (15.9)	Nm (lbf. in)
Case style				SOT-227			

ELECTRICAL CHARACTERISTICS (T_J = 25 °C unless otherwise specified)						
PARAMETER	**SYMBOL**	**TEST CONDITIONS**	**MIN.**	**TYP.**	**MAX.**	**UNITS**
Drain to source breakdown voltage	$V_{(BR)DSS}$	V_{GS} = 0 V, I_D = 1.0 mA	200	-	-	V
Breakdown voltage temperature coefficient	$\Delta V_{(BR)DSS}/\Delta T_J$	Reference to 25 °C, I_D = 1.0 mA	-	0.16	-	V/°C
Static drain to source on-resistance	$R_{DS(on)}$	V_{GS} = 10 V, I_D = 200 A	-	3.3	4.7	mΩ
Gate threshold voltage	$V_{GS(th)}$	V_{DS} = V_{GS}, I_D = 1.0 mA	1.8	3.16	4.3	V
Forward transconductance	g_{fs}	V_{DS} = 15 V, I_D = 100 A, V_{GS} = 10 V	-	270	-	S
Drain to source leakage current	I_{DSS}	V_{DS} = 200 V, V_{GS} = 0 V	-	0.5	10	μA
		V_{DS} = 200 V, V_{GS} = 0 V, T_J = 150 °C	-	160	-	
Gate to source leakage	I_{GSS}	V_{GS} = ± 20 V	-	-	± 200	nA
Total gate charge	Q_g	I_D = 120 A V_{DS} = 100 V V_{GS} = 10 V	-	250	-	nC
Gate to source charge	Q_{gs}		-	68	-	
Gate to drain ("Miller") charge	Q_{gd}		-	70	-	
Turn-on delay time	$t_{d(on)}$	V_{DD} = 100 V I_D = 100 A R_g = 1 Ω V_{GS} = 10 V	-	76	-	ns
Rise time	t_r		-	212	-	
Turn-off delay time	$t_{d(off)}$		-	134	-	
Fall time	t_f		-	118	-	
Input capacitance	C_{iss}	V_{GS} = 0 V V_{DS} = 100 V f = 1 MHz	-	16.5	-	nF
Output capacitance	C_{oss}		-	1.0	-	
Reverse transfer capacitance	C_{rss}		-	0.8	-	
Temperature coefficient of threshold voltage	$\Delta V_{GE(th)}/\Delta T_J$	V_{DS} = V_{GS}, I_D = 1.0 mA (25 °C to 125 °C)	-	9.2	-	mV/°

SOURCE-DRAIN RATINGS AND CHARACTERISTICS (T_J = 25 °C unless otherwise specified)						
PARAMETER	**SYMBOL**	**TEST CONDITIONS**	**MIN.**	**TYP.**	**MAX.**	**UNITS**
Continuous source current (body diode)	I_S	MOSFET symbol showing the integral reverse p-n junction diode 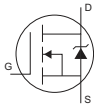	-	-	287	A
Pulsed source current (body diode)	I_{SM}		-	-	680	
Diode forward voltage	V_{SD}	I_S = 200 A, V_{GS} = 0 V	-	0.93	1.23	V
Reverse recovery time	t_{rr}	T_J = 25 °C, I_F = I_S = 50 A, dI/dt = 100 A/μs, V_R = 100 V	-	210	-	ns
Reverse recovery charge	Q_{rr}		-	1646	-	nC
Reverse recovery current	I_{RM}		-	15.7	-	A

For technical questions within your region: DiodesAmericas@vishay.com, DiodesAsia@vishay.com, DiodesEurope@vishay.com
THIS DOCUMENT IS SUBJECT TO CHANGE WITHOUT NOTICE. THE PRODUCTS DESCRIBED HEREIN AND THIS DOCUMENT ARE SUBJECT TO SPECIFIC DISCLAIMERS, SET FORTH AT www.vishay.com/doc?91000

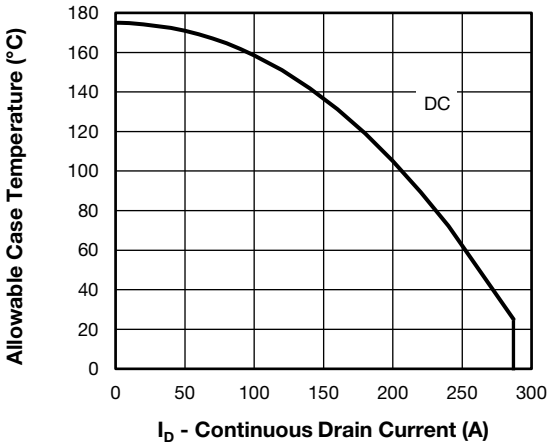

Fig. 1 - Maximum Continuous Drain Current vs. Case Temperature

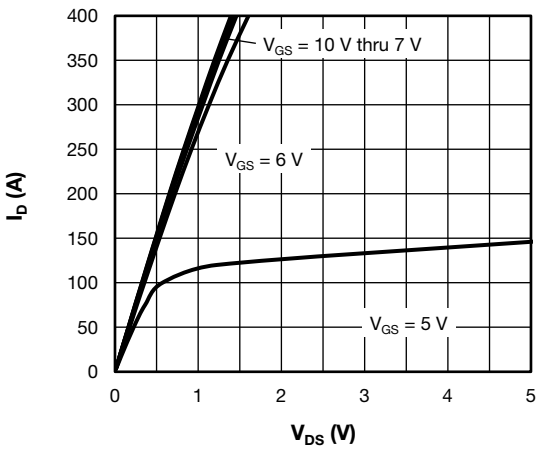

Fig. 2 - Typical Drain to Source Current Output Characteristics at T_J = 125°C

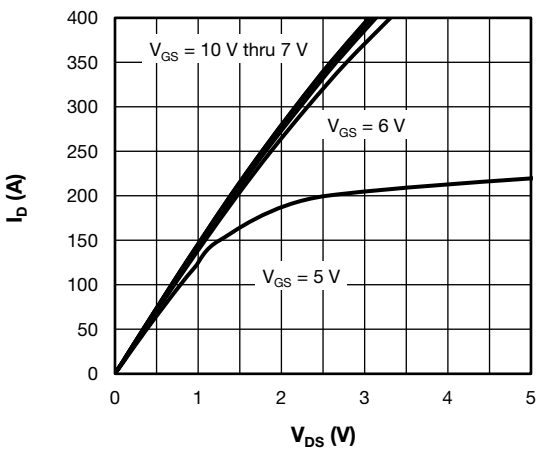

Fig. 3 - Typical Drain to Source Current Output Characteristics at T_J = 125°C

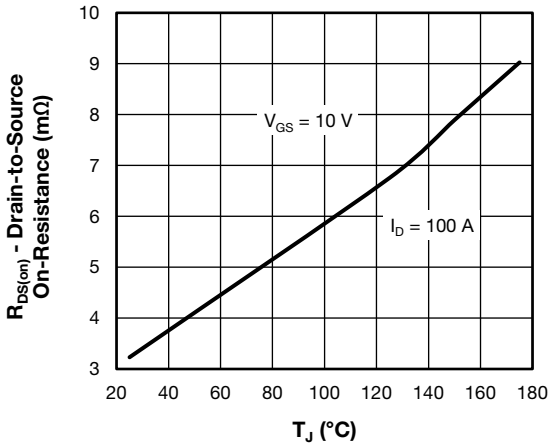

Fig. 4 - Typical Drain-to-Source On-Resistance vs. Temperature

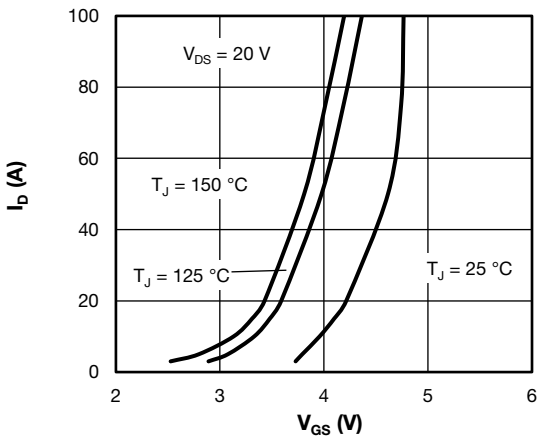

Fig. 5 - Typical Transfer Characteristics

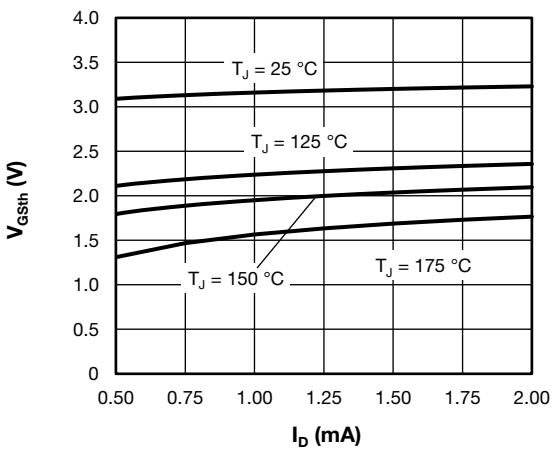

Fig. 6 - Typical Gate Threshold Voltage Characteristics

For technical questions within your region: DiodesAmericas@vishay.com, DiodesAsia@vishay.com, DiodesEurope@vishay.com
THIS DOCUMENT IS SUBJECT TO CHANGE WITHOUT NOTICE. THE PRODUCTS DESCRIBED HEREIN AND THIS DOCUMENT ARE SUBJECT TO SPECIFIC DISCLAIMERS, SET FORTH AT www.vishay.com/doc?91000

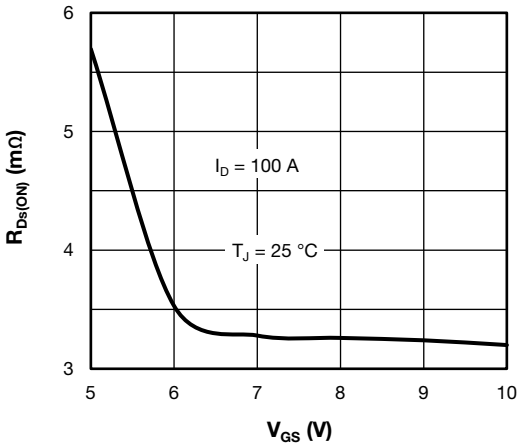

Fig. 7 - Typical Drain - State Resistance vs. Gate to Source Voltage

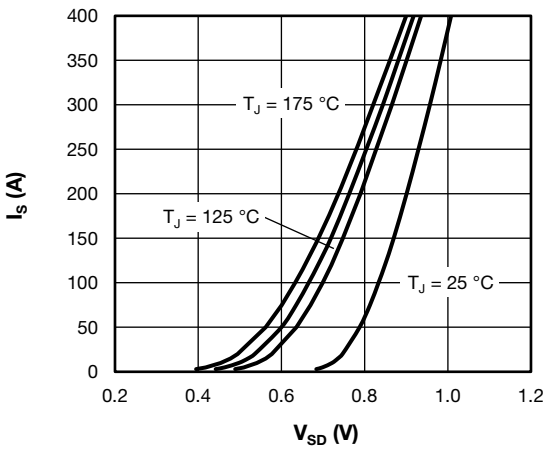

Fig. 8 - Typical Body Diode Source-to-Drain Current Characteristics

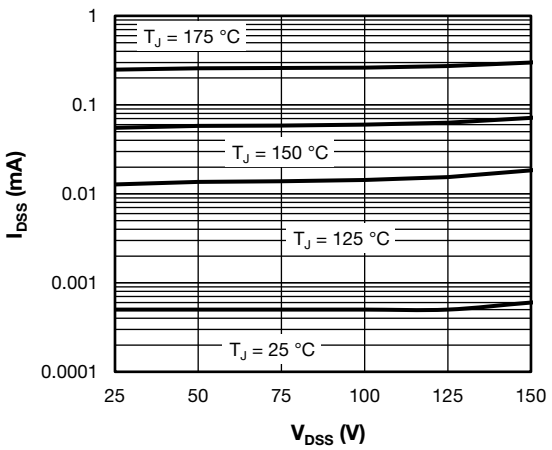

Fig. 9 - Typical Zero Gate Voltage Drain Current

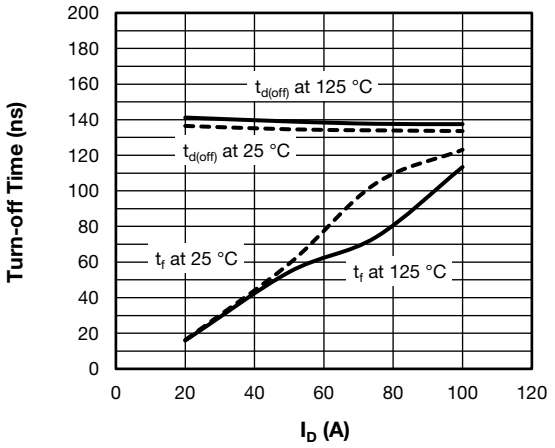

Fig. 10 - Typical Turn-Off Switching Time vs. I_D, V_{DD} = 100 V, R_g = 1.0 Ω, V_{GS} = ± 10 V, L = 500 μH

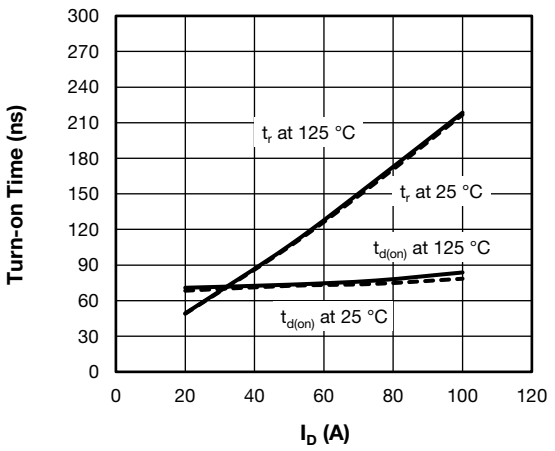

Fig. 11 - Typical Turn-On Switching Time vs. I_D, V_{DD} = 100 V, R_g = 1.0 Ω, V_{GS} = ± 10 V, L = 500 μH

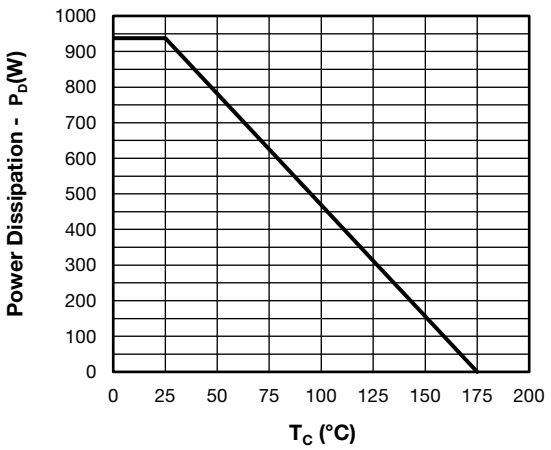

Fig. 12 - Power Dissipation Curve

For technical questions within your region: DiodesAmericas@vishay.com, DiodesAsia@vishay.com, DiodesEurope@vishay.com
THIS DOCUMENT IS SUBJECT TO CHANGE WITHOUT NOTICE. THE PRODUCTS DESCRIBED HEREIN AND THIS DOCUMENT ARE SUBJECT TO SPECIFIC DISCLAIMERS, SET FORTH AT www.vishay.com/doc?91000

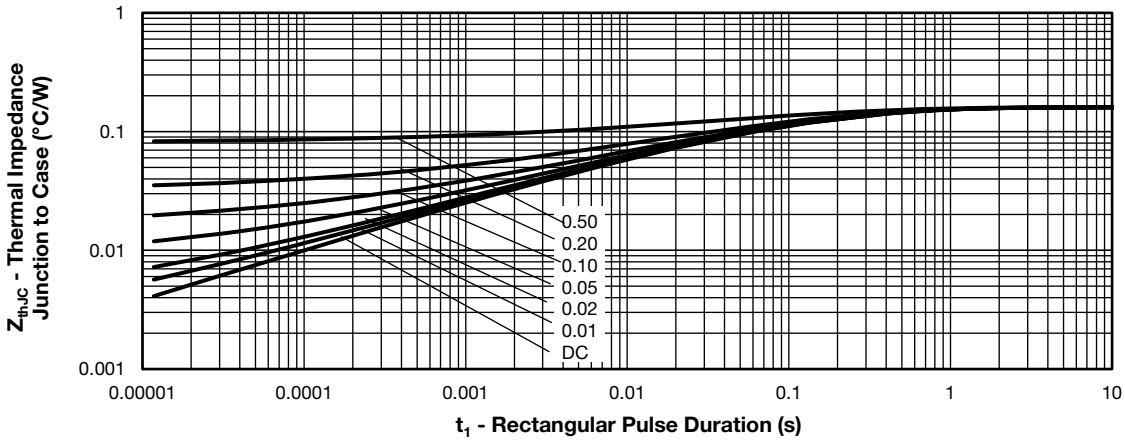

Fig. 13 - Maximum Thermal Impedance Junction-to-Case Characteristics

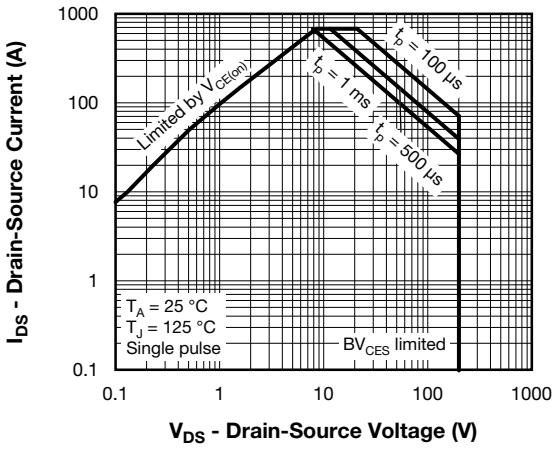

Fig. 14 - Safe Operating Area

ORDERING INFORMATION TABLE

Device code	VS-	F	C	270	S	A	20
	1	2	3	4	5	6	7

1	-	Vishay Semiconductors product
2	-	MOSFET module
3	-	MOSFET die generation
4	-	Current rating (270 = 270 A)
5	-	Circuit configuration (S = single switch)
6	-	Package indicator (SOT-227)
7	-	Voltage rating (20 = 200 V)

For technical questions within your region: DiodesAmericas@vishay.com, DiodesAsia@vishay.com, DiodesEurope@vishay.com
THIS DOCUMENT IS SUBJECT TO CHANGE WITHOUT NOTICE. THE PRODUCTS DESCRIBED HEREIN AND THIS DOCUMENT ARE SUBJECT TO SPECIFIC DISCLAIMERS, SET FORTH AT www.vishay.com/doc?91000

CIRCUIT CONFIGURATION		
CIRCUIT	CIRCUIT CONFIGURATION CODE	CIRCUIT DRAWING
Single switch	S	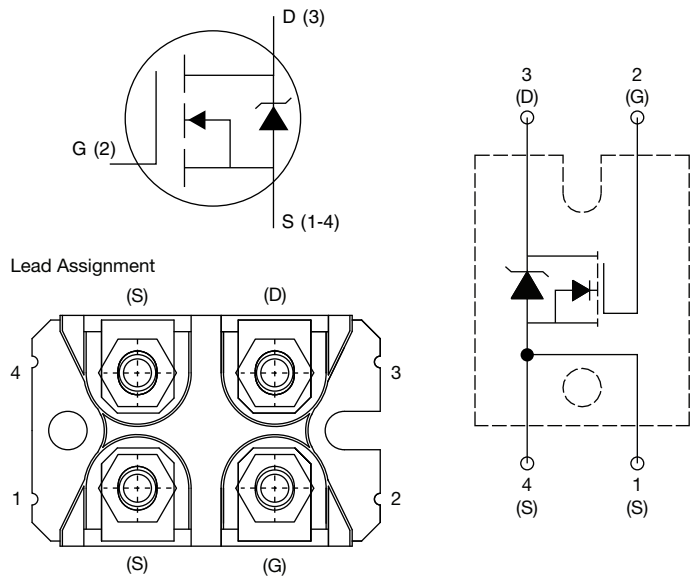

DIMENSIONS in millimeters

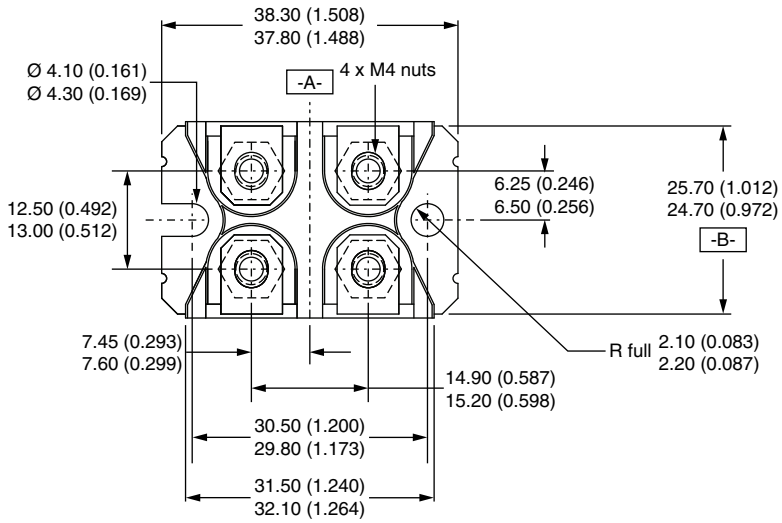

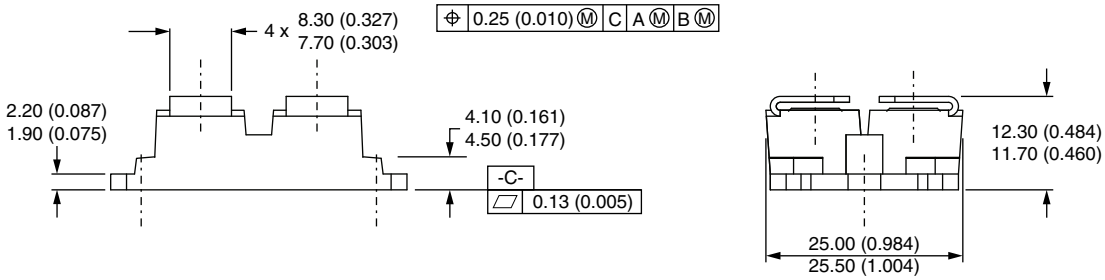

For technical questions within your region: DiodesAmericas@vishay.com, DiodesAsia@vishay.com, DiodesEurope@vishay.com
THIS DOCUMENT IS SUBJECT TO CHANGE WITHOUT NOTICE. THE PRODUCTS DESCRIBED HEREIN AND THIS DOCUMENT ARE SUBJECT TO SPECIFIC DISCLAIMERS, SET FORTH AT www.vishay.com/doc?91000

SOT-227 Generation 2

DIMENSIONS in millimeters (inches)

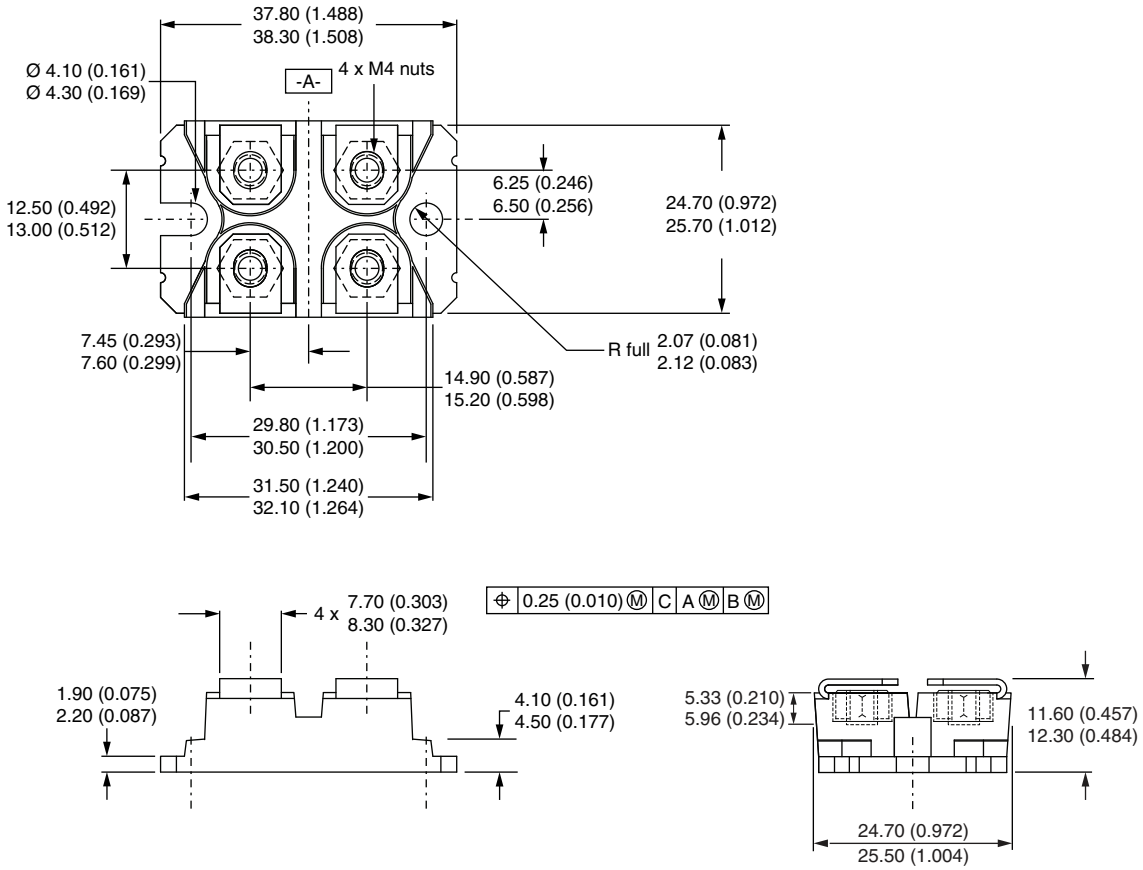

Note

- Controlling dimension: millimeter

For technical questions, contact: DiodesAmericas@vishay.com

THIS DOCUMENT IS SUBJECT TO CHANGE WITHOUT NOTICE. THE PRODUCTS DESCRIBED HEREIN AND THIS DOCUMENT ARE SUBJECT TO SPECIFIC DISCLAIMERS, SET FORTH AT www.vishay.com/doc?91000

Disclaimer

ALL PRODUCT, PRODUCT SPECIFICATIONS AND DATA ARE SUBJECT TO CHANGE WITHOUT NOTICE TO IMPROVE RELIABILITY, FUNCTION OR DESIGN OR OTHERWISE.

Vishay Intertechnology, Inc., its affiliates, agents, and employees, and all persons acting on its or their behalf (collectively, “Vishay”), disclaim any and all liability for any errors, inaccuracies or incompleteness contained in any datasheet or in any other disclosure relating to any product.

Vishay makes no warranty, representation or guarantee regarding the suitability of the products for any particular purpose or the continuing production of any product. To the maximum extent permitted by applicable law, Vishay disclaims (i) any and all liability arising out of the application or use of any product, (ii) any and all liability, including without limitation special, consequential or incidental damages, and (iii) any and all implied warranties, including warranties of fitness for particular purpose, non-infringement and merchantability.

Statements regarding the suitability of products for certain types of applications are based on Vishay's knowledge of typical requirements that are often placed on Vishay products in generic applications. Such statements are not binding statements about the suitability of products for a particular application. It is the customer's responsibility to validate that a particular product with the properties described in the product specification is suitable for use in a particular application. Parameters provided in datasheets and / or specifications may vary in different applications and performance may vary over time. All operating parameters, including typical parameters, must be validated for each customer application by the customer's technical experts. Product specifications do not expand or otherwise modify Vishay's terms and conditions of purchase, including but not limited to the warranty expressed therein.

Hyperlinks included in this datasheet may direct users to third-party websites. These links are provided as a convenience and for informational purposes only. Inclusion of these hyperlinks does not constitute an endorsement or an approval by Vishay of any of the products, services or opinions of the corporation, organization or individual associated with the third-party website. Vishay disclaims any and all liability and bears no responsibility for the accuracy, legality or content of the third-party website or for that of subsequent links.

Except as expressly indicated in writing, Vishay products are not designed for use in medical, life-saving, or life-sustaining applications or for any other application in which the failure of the Vishay product could result in personal injury or death. Customers using or selling Vishay products not expressly indicated for use in such applications do so at their own risk. Please contact authorized Vishay personnel to obtain written terms and conditions regarding products designed for such applications.

No license, express or implied, by estoppel or otherwise, to any intellectual property rights is granted by this document or by any conduct of Vishay. Product names and markings noted herein may be trademarks of their respective owners.

© 2023 VISHAY INTERTECHNOLOGY, INC. ALL RIGHTS RESERVED