Insulated Gate Bipolar Transistor (Trench IGBT), 180 A

SOT-227

PRIMARY CHARACTERISTICS	
V_{CES}	1200 V
$I_{C(DC)}$	185 A at 90 °C
$V_{CE(on)}$ typical at 100 A, 25 °C	1.55 V
$I_{F(DC)}$	32 A at 90 °C
Speed	8 kHz to 30 kHz
Package	SOT-227
Circuit configuration	Single switch with AP diode

FEATURES

- 1200 V trench and field stop technology
- Low switching losses
- Positive temperature coefficient
- Easy paralleling
- Square RBSOA
- 10 µs short circuit capability
- HEXFRED® antiparallel diodes with ultrasoft reverse recovery
- T_J maximum = 150 °C
- Fully isolated package
- Very low internal inductance (≤ 5 nH typical)
- Industry standard outline
- UL approved file E78996
- Material categorization: for definitions of compliance please see www.vishay.com/doc?99912

Pb-free
RoHS COMPLIANT

BENEFITS

- Designed for increased operating efficiency in power conversion: UPS, SMPS, welding, induction heating
- Easy to assemble and parallel
- Direct mounting to heatsink
- Plug-in compatible with other SOT-227 packages
- Very low $V_{CE(on)}$
- Low EMI, requires less snubbing

ABSOLUTE MAXIMUM RATINGS

PARAMETER	SYMBOL	TEST CONDITIONS	MAX.	UNITS
Collector to emitter voltage	V_{CES}		1200	V
Continuous collector current	I_C	T_C = 25 °C	281	A
		T_C = 90 °C	185	
Pulsed collector current	I_{CM}		390	
Clamped inductive load current	I_{LM}		450	
Gate to emitter voltage	V_{GE}		± 20	V
Diode continuous forward current	I_F	T_C = 25 °C	51	A
		T_C = 90 °C	32	
Single pulse forward current	I_{FSM}	10 ms sine or 6 ms rectangular pulse, T_J = 25 °C	185	
Power dissipation, IGBT	P_D	T_C = 25 °C	1087	W
		T_C = 90 °C	522	
Power dissipation, diode	P_D	T_C = 25 °C	216	
		T_C = 90 °C	103	
Isolation voltage	V_{ISOL}	Any terminal to case, t = 1 min	2500	V

For technical questions within your region: DiodesAmericas@vishay.com, DiodesAsia@vishay.com, DiodesEurope@vishay.com
THIS DOCUMENT IS SUBJECT TO CHANGE WITHOUT NOTICE. THE PRODUCTS DESCRIBED HEREIN AND THIS DOCUMENT ARE SUBJECT TO SPECIFIC DISCLAIMERS, SET FORTH AT www.vishay.com/doc?91000

ELECTRICAL SPECIFICATIONS (T_J = 25 °C unless otherwise specified)						
PARAMETER	**SYMBOL**	**TEST CONDITIONS**	**MIN.**	**TYP.**	**MAX.**	**UNITS**
Collector to emitter breakdown voltage	$V_{BR(CES)}$	V_{GE} = 0 V, I_C = 5.7 mA	1200	-	-	V
Collector to emitter voltage	$V_{CE(on)}$	V_{GE} = 15 V, I_C = 100 A	-	1.55	2.05	
		V_{GE} = 15 V, I_C = 100 A, T_J = 125 °C	-	1.71	-	
		V_{GE} = 15 V, I_C = 100 A, T_J = 150 °C	-	1.76	-	
Gate threshold voltage	$V_{GE(th)}$	V_{CE} = V_{GE}, I_C = 5.7 mA	4.75	5.8	7.0	
		V_{CE} = V_{GE}, I_C = 5.7 mA, T_J = 125 °C	-	4.7	-	
Temperature coefficient of threshold voltage	$\Delta V_{GE(th)}/\Delta T_J$	V_{CE} = V_{GE}, I_C = 5.7 mA (25 °C to 125 °C)	-	-11.4	-	mV/°C
Transfer characteristics	V_{GE}	V_{DS} = 20 V, I_D = 100 A	-	8.5	-	V
Collector to emitter leakage current	I_{CES}	V_{GE} = 0 V, V_{CE} = 1200 V	-	0.6	100	μA
		V_{GE} = 0 V, V_{CE} = 1200 V, T_J = 125 °C	-	0.4	-	mA
		V_{GE} = 0 V, V_{CE} = 1200 V, T_J = 150 °C	-	1.6	-	
Forward voltage drop, diode	V_{FM}	I_F = 40 A, V_{GE} = 0 V	-	3.0	3.5	V
		I_F = 40 A, V_{GE} = 0 V, T_J = 125 °C	-	3.2	-	
		I_F = 40 A, V_{GE} = 0 V, T_J = 150 °C	-	3.2	-	
Gate to emitter leakage current	I_{GES}	V_{GE} = ± 20 V	-	-	± 220	nA

SWITCHING CHARACTERISTICS (T_J = 25 °C unless otherwise specified)							
PARAMETER	**SYMBOL**	**TEST CONDITIONS**		**MIN.**	**TYP.**	**MAX.**	**UNITS**
Input capacitance	C_{ies}	V_{CE} = 25 V, V_{GE} = 0 V, f = 1 MHz, T_J = 25 °C		-	9350	-	pF
Reverse transfer capacitance	C_{res}			-	350	-	
Turn-on switching loss	E_{on}	I_C = 100 A, V_{CC} = 720 V, V_{GE} = 15 V, R_g = 1.0 Ω, L = 500 μH, T_J = 25 °C	Energy losses include tail and diode recovery	-	4.4	-	mJ
Turn-off switching loss	E_{off}			-	7.3	-	
Total switching loss	E_{tot}			-	11.7	-	
Turn-on delay time	$t_{d(on)}$			-	192	-	ns
Rise time	t_r			-	59	-	
Turn-off delay time	$t_{d(off)}$			-	334	-	
Fall time	t_f			-	137	-	
Turn-on switching loss	E_{on}	I_C = 100 A, V_{CC} = 720 V, V_{GE} = 15 V, R_g = 1.0 Ω, L = 500 μH, T_J = 125 °C		-	5.7	-	mJ
Turn-off switching loss	E_{off}			-	11.6	-	
Total switching loss	E_{tot}			-	17.3	-	
Turn-on delay time	$t_{d(on)}$			-	200	-	ns
Rise time	t_r			-	62	-	
Turn-off delay time	$t_{d(off)}$			-	485	-	
Fall time	t_f			-	138	-	
Reverse bias safe operating area	RBSOA	T_J = 150 °C, I_C = 450 A, R_g = 1.0 Ω, V_{GE} = 15 V to 0 V, V_{CC} = 600 V, V_P = 1200 V, L = 500 μH		Fullsquare			
Diode reverse recovery time	t_{rr}	I_F = 50 A, dI_F/dt = 200 A/μs, V_R = 400 V		-	163	-	ns
Diode peak reverse current	I_{rr}			-	10.4	-	A
Diode recovery charge	Q_{rr}			-	851	-	nC
Diode reverse recovery time	t_{rr}	I_F = 50 A, dI_F/dt = 200 A/μs, V_R = 400 V, T_J = 125 °C		-	225	-	ns
Diode peak reverse current	I_{rr}			-	14.9	-	A
Diode recovery charge	Q_{rr}			-	1698	-	nC
Short circuit safe operating area	SCSOA	T_J = 150 °C, V_{GE} = 15 V to 0 V, V_{CC} = 800 V, V_p = 1200 V		10			μs

For technical questions within your region: DiodesAmericas@vishay.com, DiodesAsia@vishay.com, DiodesEurope@vishay.com
THIS DOCUMENT IS SUBJECT TO CHANGE WITHOUT NOTICE. THE PRODUCTS DESCRIBED HEREIN AND THIS DOCUMENT ARE SUBJECT TO SPECIFIC DISCLAIMERS, SET FORTH AT www.vishay.com/doc?91000

THERMAL AND MECHANICAL SPECIFICATIONS							
PARAMETER		SYMBOL	TEST CONDITIONS	MIN.	TYP.	MAX.	UNITS
Junction and storage temperature range		T_J, T_{Stg}		-40	-	150	°C
Junction to case	IGBT	R_{thJC}		-	-	0.115	°C/W
	Diode			-	-	0.57	
Case to heatsink		R_{thCS}	Flat, greased surface	-	0.05	-	
Weight				-	30	-	g
Mounting torque			Torque to terminal	-	-	1.1 (9.7)	Nm (lbf. in)
			Torque to heatsink	-	-	1.3 (11.5)	Nm (lbf. in)
Case style		SOT-227					

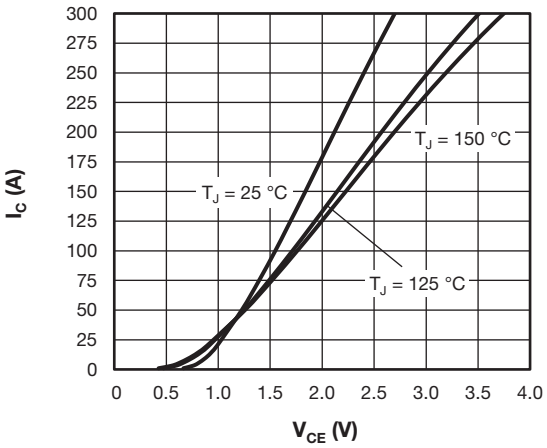

Fig. 1 - Typical IGBT Output Characteristics, V_{GE} = 15 V

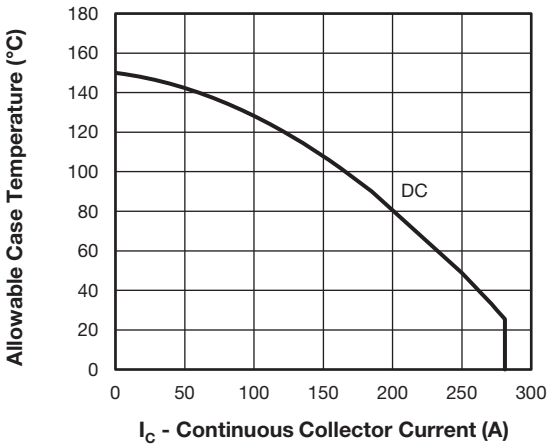

Fig. 3 - Maximum IGBT Continuous Collector Current vs. Case Temperature

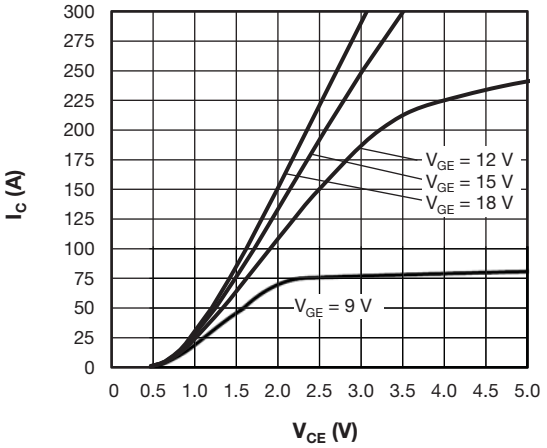

Fig. 2 - Typical IGBT Output Characteristics, T_J = 125 °C

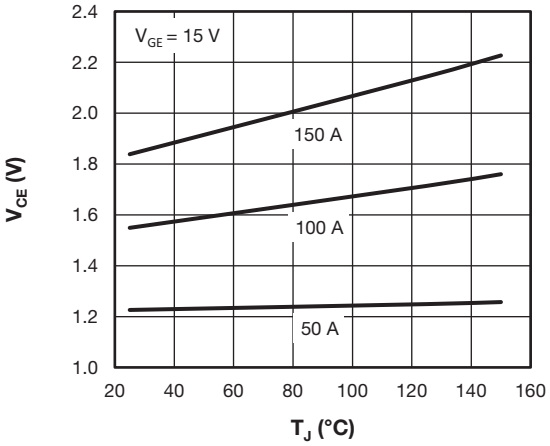

Fig. 4 - Collector to Emitter Voltage vs. Junction Temperature

For technical questions within your region: DiodesAmericas@vishay.com, DiodesAsia@vishay.com, DiodesEurope@vishay.com
THIS DOCUMENT IS SUBJECT TO CHANGE WITHOUT NOTICE. THE PRODUCTS DESCRIBED HEREIN AND THIS DOCUMENT ARE SUBJECT TO SPECIFIC DISCLAIMERS, SET FORTH AT www.vishay.com/doc?91000

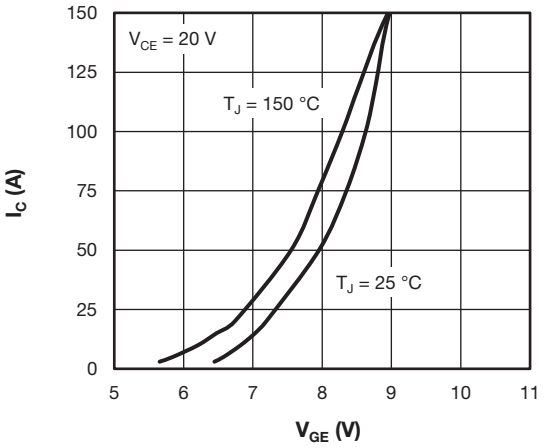

Fig. 5 - Typical IGBT Transfer Characteristics

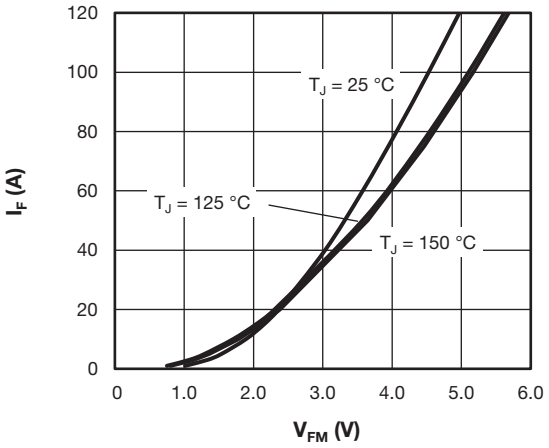

Fig. 8 - Typical Diode Forward Characteristics

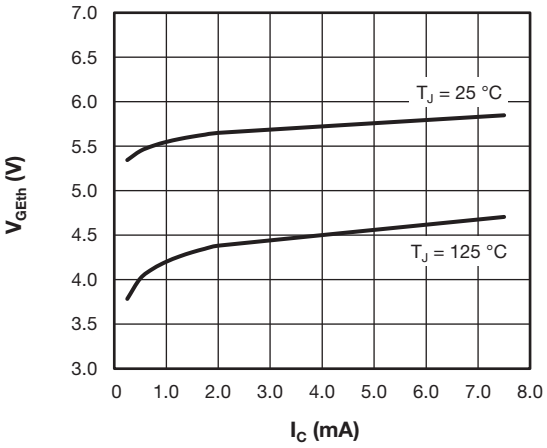

Fig. 6 - Typical IGBT Gate Threshold Voltage

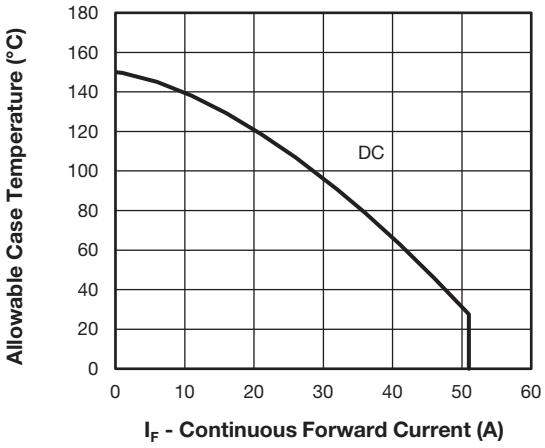

Fig. 9 - Maximum Diode Continuous Forward Current vs. Case Temperature

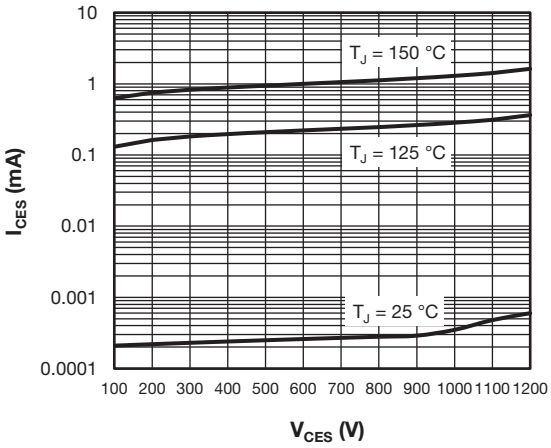

Fig. 7 - Typical IGBT Zero Gate Voltage Collector Current

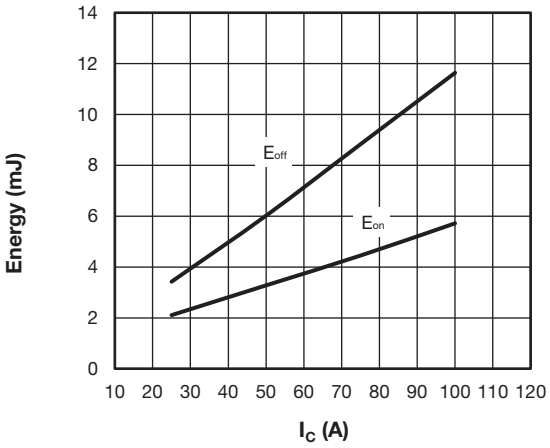

Fig. 10 - Typical IGBT Energy Loss vs. I_C
T_J = 125 °C, V_{CC} = 720 V, R_g = 1.0 Ω, V_{GE} = 15 V, L = 500 μH

For technical questions within your region: DiodesAmericas@vishay.com, DiodesAsia@vishay.com, DiodesEurope@vishay.com
THIS DOCUMENT IS SUBJECT TO CHANGE WITHOUT NOTICE. THE PRODUCTS DESCRIBED HEREIN AND THIS DOCUMENT ARE SUBJECT TO SPECIFIC DISCLAIMERS, SET FORTH AT www.vishay.com/doc?91000

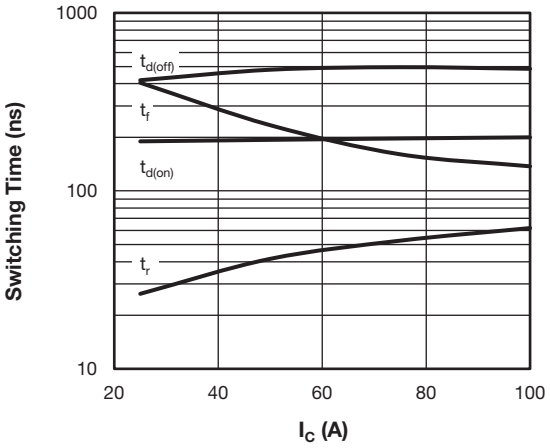

Fig. 11 - Typical IGBT Switching Time vs. I_C
T_J = 125 °C, V_{CC} = 720 V, R_g = 1.0 Ω,, V_{GE} = 15 V, L = 500 μH

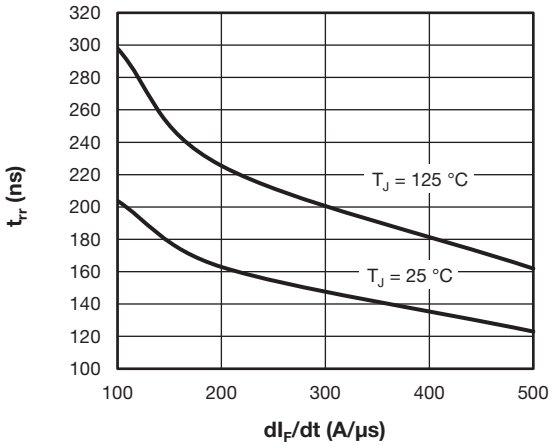

Fig. 14 - Typical Diode Reverse Recovery Time vs. dI_F/dt
V_{rr} = 400 V, I_F = 50 A

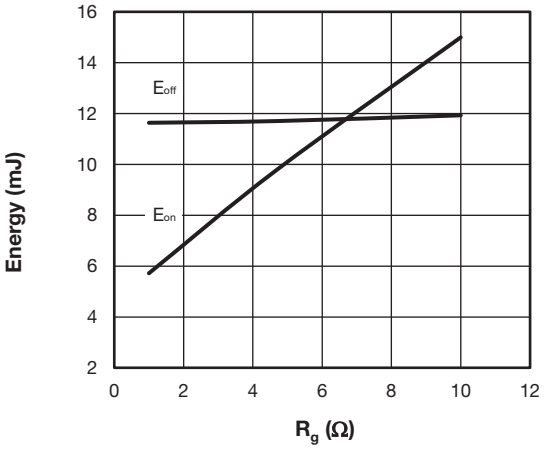

Fig. 12 - Typical IGBT Energy Loss vs. R_g
T_J = 125 °C, V_{CC} = 720 V, I_C = 100 A, V_{GE} = 15 V, L = 500 μH

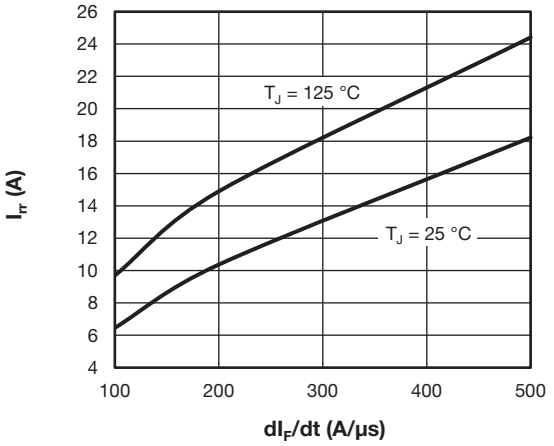

Fig. 15 - Typical Diode Reverse Recovery Current vs. dI_F/dt
V_{rr} = 400 V, I_F = 50 A

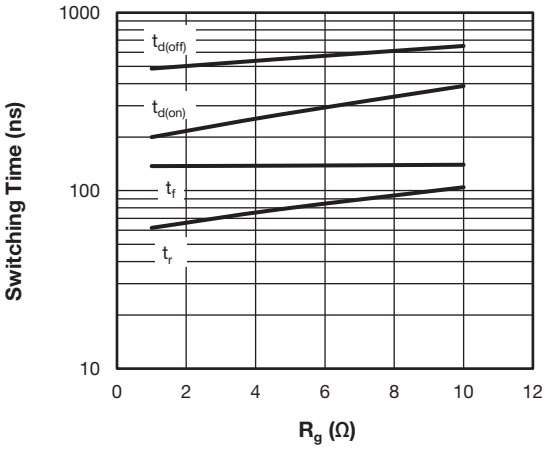

Fig. 13 - Typical IGBT Switching Time vs. R_g
T_J = 125 °C, V_{CC} = 720 V, I_C = 100 A, V_{GE} = 15 V, L = 500 μH

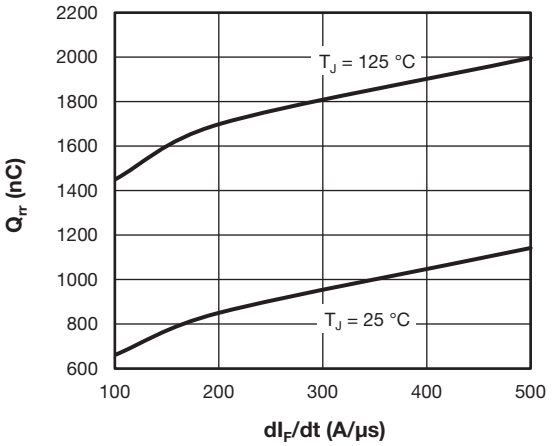

Fig. 16 - Typical Diode Reverse Recovery Charge vs. dI_F/dt
V_{rr} = 400 V, I_F = 50 A

For technical questions within your region: DiodesAmericas@vishay.com, DiodesAsia@vishay.com, DiodesEurope@vishay.com
THIS DOCUMENT IS SUBJECT TO CHANGE WITHOUT NOTICE. THE PRODUCTS DESCRIBED HEREIN AND THIS DOCUMENT ARE SUBJECT TO SPECIFIC DISCLAIMERS, SET FORTH AT www.vishay.com/doc?91000

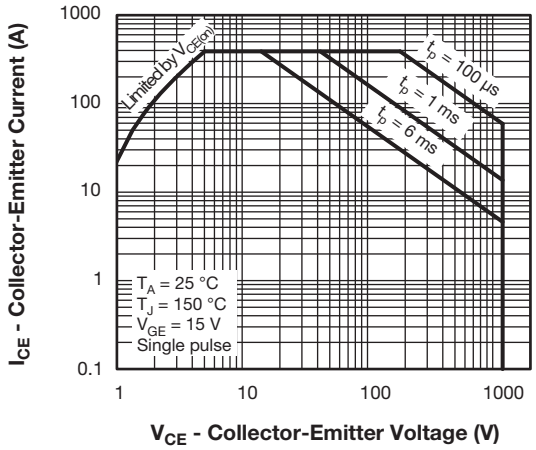

Fig. 17 - IGBT Safe Operating Area

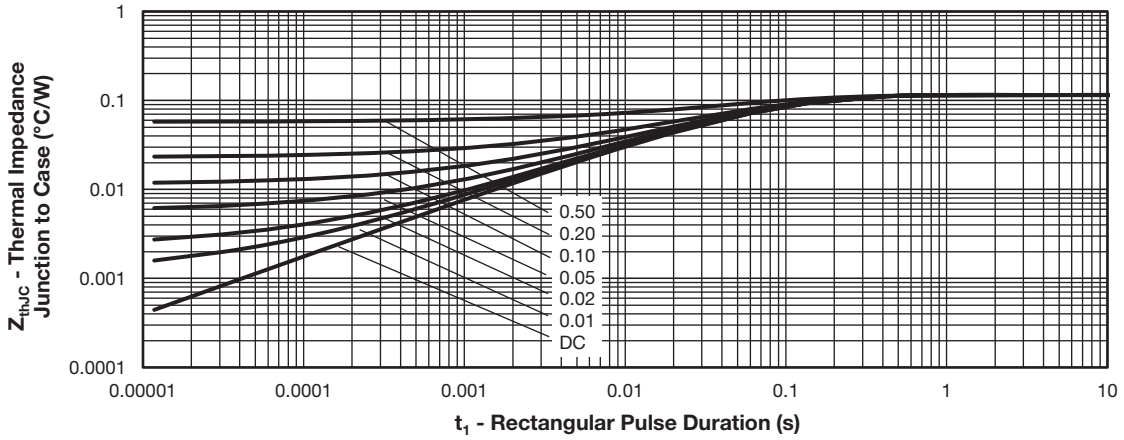

Fig. 18 - Maximum Thermal Impedance Z_{thJC} Characteristics - (IGBT)

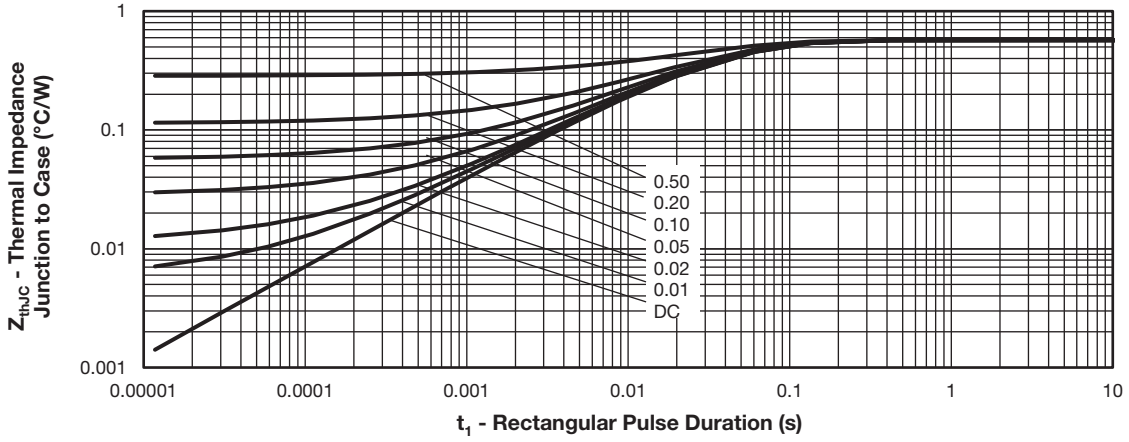

Fig. 19 - Maximum Thermal Impedance Z_{thJC} Characteristics - (Diode)

For technical questions within your region: DiodesAmericas@vishay.com, DiodesAsia@vishay.com, DiodesEurope@vishay.com
THIS DOCUMENT IS SUBJECT TO CHANGE WITHOUT NOTICE. THE PRODUCTS DESCRIBED HEREIN AND THIS DOCUMENT ARE SUBJECT TO SPECIFIC DISCLAIMERS, SET FORTH AT www.vishay.com/doc?91000

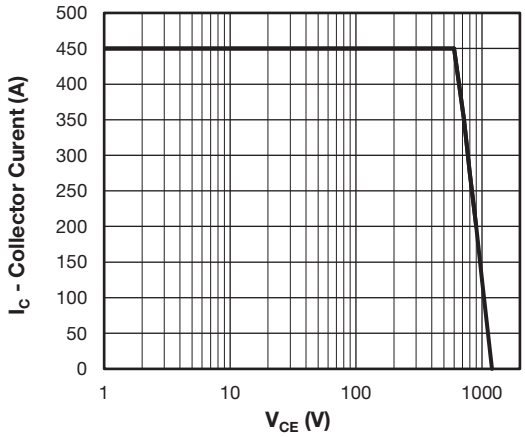

Fig. 20 - IGBT Reverse Bias SOA
V_{GE} = 15 V, T_J = 150 °C

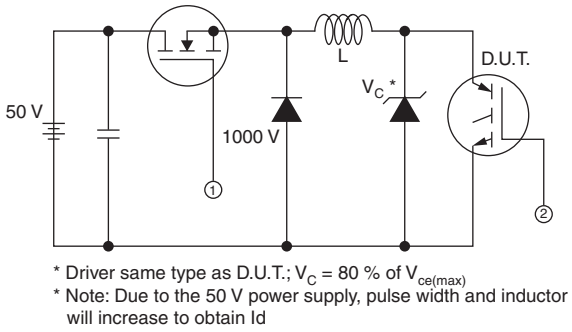

Fig. 21 - Clamped Inductive Load Test Circuit

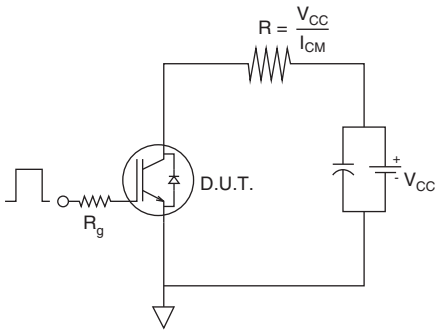

Fig. 22 - Pulsed Collector Current Test Circuit

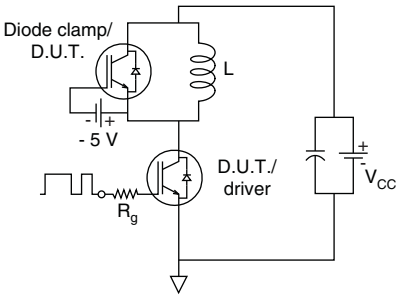

Fig. 23 - Switching Loss Test Circuit

For technical questions within your region: DiodesAmericas@vishay.com, DiodesAsia@vishay.com, DiodesEurope@vishay.com
THIS DOCUMENT IS SUBJECT TO CHANGE WITHOUT NOTICE. THE PRODUCTS DESCRIBED HEREIN AND THIS DOCUMENT ARE SUBJECT TO SPECIFIC DISCLAIMERS, SET FORTH AT www.vishay.com/doc?91000

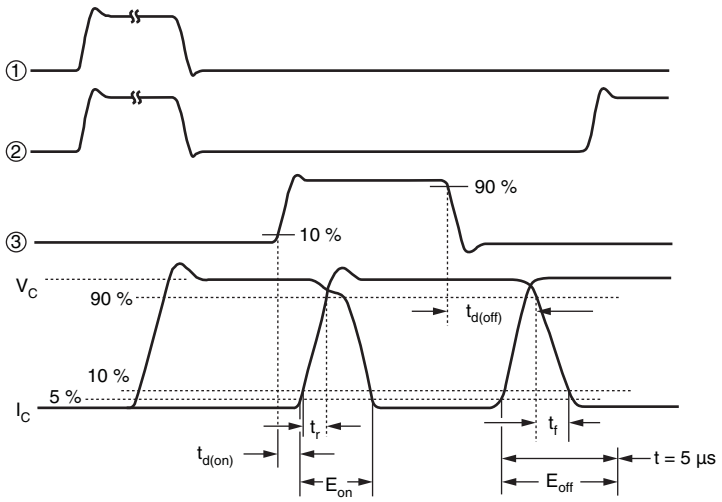

$E_{ts} = (E_{on} + E_{off})$

Fig. 24 - Switching Loss Waveforms Test Circuit

ORDERING INFORMATION TABLE

Device code	VS-	G	T	180	D	A	120	U
	1	2	3	4	5	6	7	8

1 - Vishay Semiconductors product
2 - Insulated gate bipolar transistor (IGBT)
3 - Trench IGBT technology
4 - Current rating (180 = 180 A)
5 - Circuit configuration (D = single switch with antiparallel diode)
6 - Package indicator (A = SOT-227)
7 - Voltage rating (120 = 1200 V)
8 - Speed/type (U = ultrafast)

CIRCUIT CONFIGURATION		
CIRCUIT	**CIRCUIT CONFIGURATION CODE**	**CIRCUIT DRAWING**
Single switch with AP diode	D	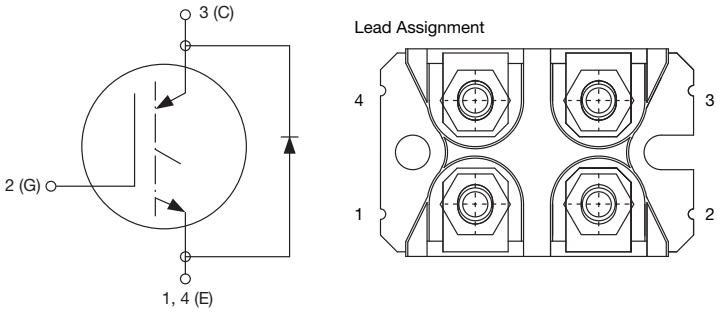

LINKS TO RELATED DOCUMENTS	
Dimensions	www.vishay.com/doc?95423
Packaging information	www.vishay.com/doc?95425

For technical questions within your region: DiodesAmericas@vishay.com, DiodesAsia@vishay.com, DiodesEurope@vishay.com
THIS DOCUMENT IS SUBJECT TO CHANGE WITHOUT NOTICE. THE PRODUCTS DESCRIBED HEREIN AND THIS DOCUMENT ARE SUBJECT TO SPECIFIC DISCLAIMERS, SET FORTH AT www.vishay.com/doc?91000

SOT-227 Generation 2

DIMENSIONS in millimeters (inches)

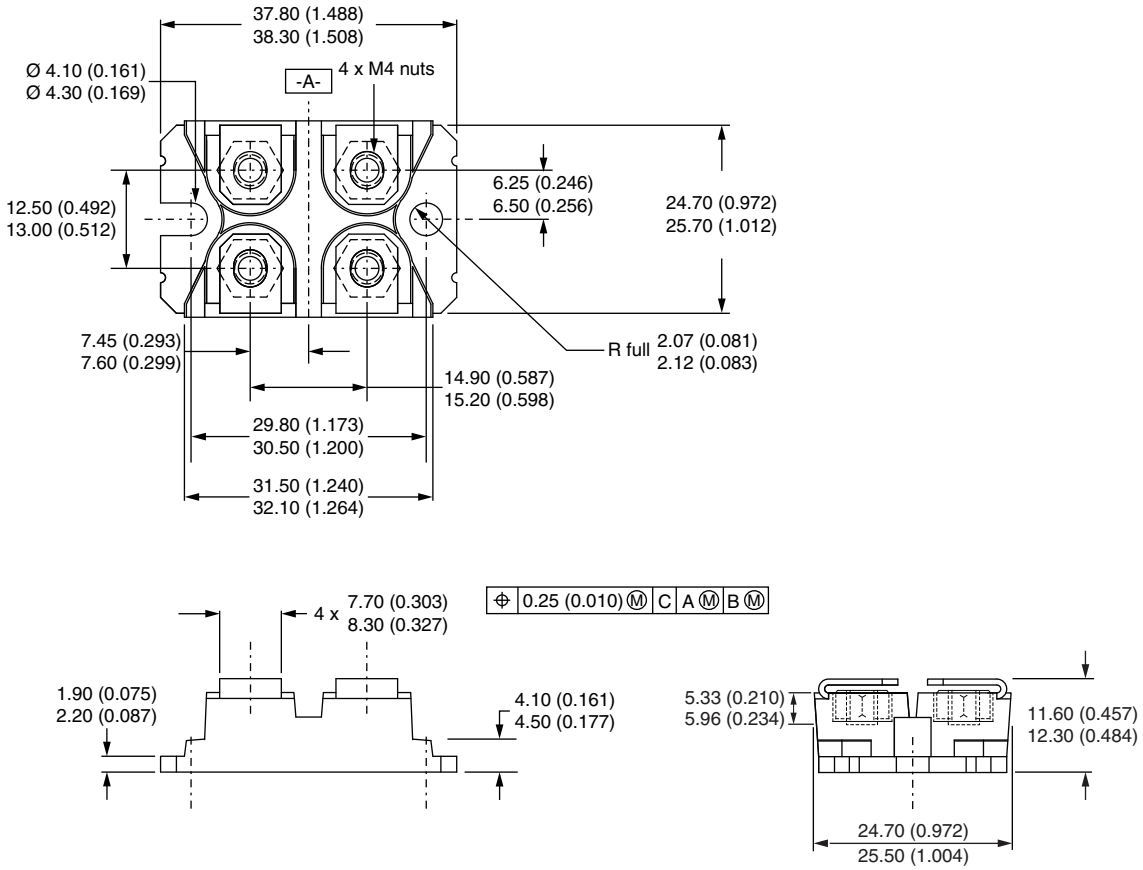

Note

- Controlling dimension: millimeter

For technical questions, contact: DiodesAmericas@vishay.com

THIS DOCUMENT IS SUBJECT TO CHANGE WITHOUT NOTICE. THE PRODUCTS DESCRIBED HEREIN AND THIS DOCUMENT ARE SUBJECT TO SPECIFIC DISCLAIMERS, SET FORTH AT www.vishay.com/doc?91000

Disclaimer

ALL PRODUCT, PRODUCT SPECIFICATIONS AND DATA ARE SUBJECT TO CHANGE WITHOUT NOTICE TO IMPROVE RELIABILITY, FUNCTION OR DESIGN OR OTHERWISE.

Vishay Intertechnology, Inc., its affiliates, agents, and employees, and all persons acting on its or their behalf (collectively, “Vishay”), disclaim any and all liability for any errors, inaccuracies or incompleteness contained in any datasheet or in any other disclosure relating to any product.

Vishay makes no warranty, representation or guarantee regarding the suitability of the products for any particular purpose or the continuing production of any product. To the maximum extent permitted by applicable law, Vishay disclaims (i) any and all liability arising out of the application or use of any product, (ii) any and all liability, including without limitation special, consequential or incidental damages, and (iii) any and all implied warranties, including warranties of fitness for particular purpose, non-infringement and merchantability.

Statements regarding the suitability of products for certain types of applications are based on Vishay's knowledge of typical requirements that are often placed on Vishay products in generic applications. Such statements are not binding statements about the suitability of products for a particular application. It is the customer's responsibility to validate that a particular product with the properties described in the product specification is suitable for use in a particular application. Parameters provided in datasheets and / or specifications may vary in different applications and performance may vary over time. All operating parameters, including typical parameters, must be validated for each customer application by the customer's technical experts. Product specifications do not expand or otherwise modify Vishay's terms and conditions of purchase, including but not limited to the warranty expressed therein.

Hyperlinks included in this datasheet may direct users to third-party websites. These links are provided as a convenience and for informational purposes only. Inclusion of these hyperlinks does not constitute an endorsement or an approval by Vishay of any of the products, services or opinions of the corporation, organization or individual associated with the third-party website. Vishay disclaims any and all liability and bears no responsibility for the accuracy, legality or content of the third-party website or for that of subsequent links.

Except as expressly indicated in writing, Vishay products are not designed for use in medical, life-saving, or life-sustaining applications or for any other application in which the failure of the Vishay product could result in personal injury or death. Customers using or selling Vishay products not expressly indicated for use in such applications do so at their own risk. Please contact authorized Vishay personnel to obtain written terms and conditions regarding products designed for such applications.

No license, express or implied, by estoppel or otherwise, to any intellectual property rights is granted by this document or by any conduct of Vishay. Product names and markings noted herein may be trademarks of their respective owners.

© 2023 VISHAY INTERTECHNOLOGY, INC. ALL RIGHTS RESERVED