Insulated Ultra Fast Rectifier Module, 330 A

SOT-227

FEATURES

- Gen 4 FRED Pt® dices technology
- Two fully independent diodes
- Fully insulated package
- Ultrafast, soft reverse recovery, with high operation junction temperature (T_J max. = 175 °C)
- Low forward voltage drop
- Optimized for power conversion: welding and industrial SMPS applications
- Easy to use and parallel
- Industry standard outline
- UL approved file E78996
- Designed and qualified for industrial level
- Material categorization: for definitions of compliance please see www.vishay.com/doc?99912

Pb-free
RoHS COMPLIANT

PRIMARY CHARACTERISTICS	
V_R	600 V
$I_{F(AV)}$ per module at T_C = 107 °C	330 A
t_{rr}	98 ns
Type	Modules - Diode FRED Pt®
Package	SOT-227
Circuit configuration	Two separate diodes, parallel pin-out

DESCRIPTION / APPLICATIONS

The VS-UFL330FA60 insulated modules integrate two state of the art ultrafast recovery rectifiers in the compact, industry standard SOT-227 package.
Gen 4 FRED technology, state of the art, ultra low V_F, soft switching optimized for IGBT F/W diode.
The minimized conduction loss, optimized storage charge, and low recovery current minimized the switching losses and reduce the over dissipation in the switching element and snubbers.

ABSOLUTE MAXIMUM RATINGS (T_J = 25 °C unless otherwise specified)

PARAMETER	SYMBOL	TEST CONDITIONS	MAX.	UNITS
Cathode to anode voltage	V_R		600	V
Continuous forward current per diode	I_F	T_C = 90 °C	243	A
Single pulse forward current per diode	I_{FSM}	T_C = 25 °C, 10 ms sine or 6 ms rectangular pulse	1130	
Maximum power dissipation per module	P_D	T_C = 90 °C	773	W
RMS isolation voltage	V_{ISOL}	Any terminal to case, t = 1 minute	2500	V
Operating junction and storage temperatures	T_J, T_{Stg}		-55 to +175	°C

For technical questions within your region: DiodesAmericas@vishay.com, DiodesAsia@vishay.com, DiodesEurope@vishay.com
THIS DOCUMENT IS SUBJECT TO CHANGE WITHOUT NOTICE. THE PRODUCTS DESCRIBED HEREIN AND THIS DOCUMENT ARE SUBJECT TO SPECIFIC DISCLAIMERS, SET FORTH AT www.vishay.com/doc?91000

ELECTRICAL SPECIFICATIONS PER DIODE (T_J = 25 °C unless otherwise specified)						
PARAMETER	SYMBOL	TEST CONDITIONS	MIN.	TYP.	MAX.	UNITS
Cathode to anode breakdown voltage	V_{BR}	I_R = 500 µA	600	-	-	V
Forward voltage	V_{FM}	I_F = 200 A	-	1.43	1.65	
		I_F = 200 A, T_J = 125 °C	-	1.29	-	
		I_F = 200 A, T_J = 175 °C	-	1.22	-	
Reverse leakage current	I_{RM}	V_R = 600 V	-	0.3	150	µA
		T_J = 125 °C, V_R = 600 V	-	222	-	
		T_J = 175 °C, V_R = 600 V	-	4.2	-	mA
Junction capacitance	C_T	V_R = 600 V, f = 1 MHz	-	160	-	pF

DYNAMIC RECOVERY CHARACTERISTICS (T_J = 25 °C unless otherwise specified)							
PARAMETER	SYMBOL	TEST CONDITIONS		MIN.	TYP.	MAX.	UNITS
Reverse recovery time	t_{rr}	T_J = 25 °C	I_F = 50 A dI_F/dt = 500 A/µs V_R = 200 V	-	98	-	ns
		T_J = 125 °C		-	163	-	
Peak recovery current	I_{RRM}	T_J = 25 °C		-	17	-	A
		T_J = 125 °C		-	34	-	
Reverse recovery charge	Q_{rr}	T_J = 25 °C		-	825	-	nC
		T_J = 125 °C		-	2788	-	

THERMAL - MECHANICAL SPECIFICATIONS						
PARAMETER	SYMBOL	TEST CONDITIONS	MIN.	TYP.	MAX.	UNITS
Junction to case, single leg conducting	R_{thJC}		-	-	0.22	°C/W
Junction to case, both leg conducting			-	-	0.11	
Case to heatsink	R_{thCS}	Flat, greased surface	-	0.1	-	
Weight			-	30	-	g
Mounting torque		Torque to terminal	-	-	1.1 (9.7)	Nm (lbf.in)
		Torque to heatsink	-	-	1.8 (15.9)	Nm (lbf.in)
Case style			SOT-227			

For technical questions within your region: DiodesAmericas@vishay.com, DiodesAsia@vishay.com, DiodesEurope@vishay.com
THIS DOCUMENT IS SUBJECT TO CHANGE WITHOUT NOTICE. THE PRODUCTS DESCRIBED HEREIN AND THIS DOCUMENT ARE SUBJECT TO SPECIFIC DISCLAIMERS, SET FORTH AT www.vishay.com/doc?91000

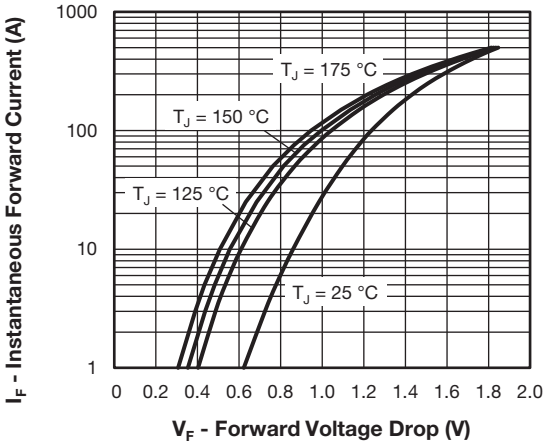

Fig. 1 - Typical Forward Voltage Drop vs. Instantaneous Forward Current (Per Diode)

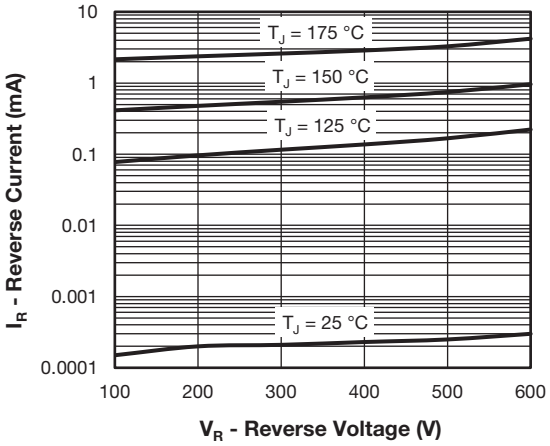

Fig. 2 - Typical Reverse Current vs. Reverse Voltage (Per Diode)

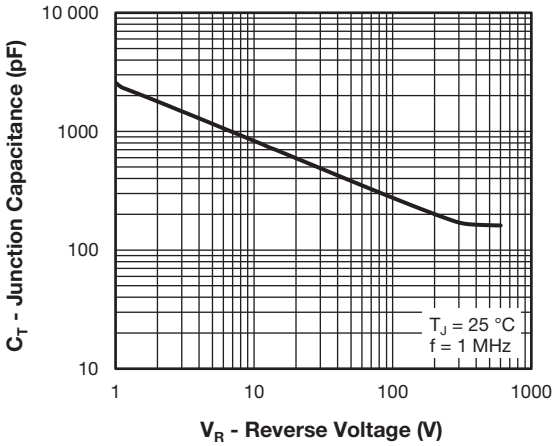

Fig. 3 - Typical Junction Capacitance vs Reverse Voltage (Per Diode)

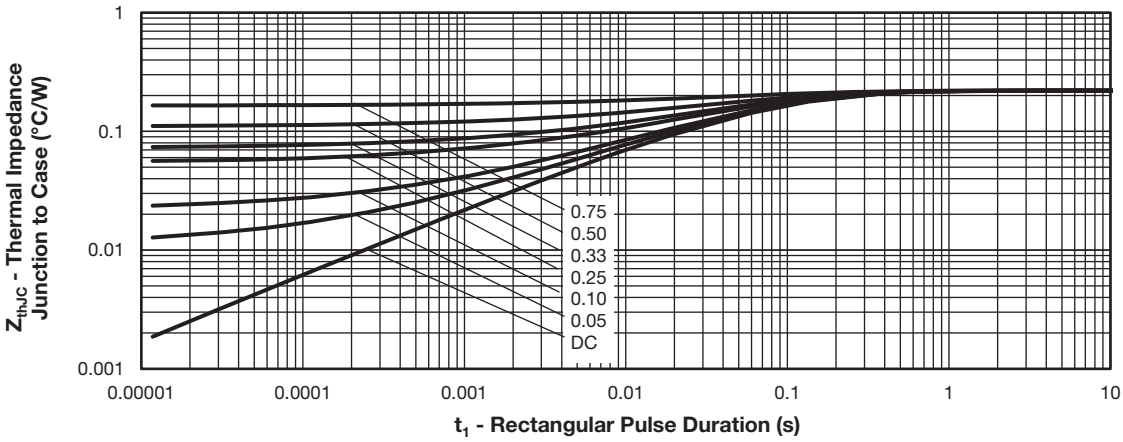

Fig. 4 - Maximum Thermal Impedance Junction-to-Case Characteristics (Per Diode)

For technical questions within your region: DiodesAmericas@vishay.com, DiodesAsia@vishay.com, DiodesEurope@vishay.com
THIS DOCUMENT IS SUBJECT TO CHANGE WITHOUT NOTICE. THE PRODUCTS DESCRIBED HEREIN AND THIS DOCUMENT ARE SUBJECT TO SPECIFIC DISCLAIMERS, SET FORTH AT www.vishay.com/doc?91000

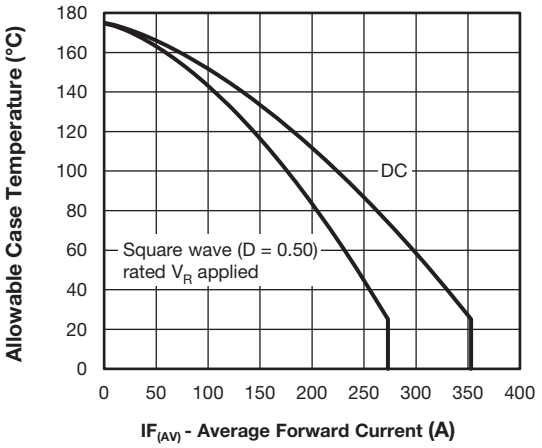

Fig. 5 - Maximum Current Rating Capability (Per Diode)

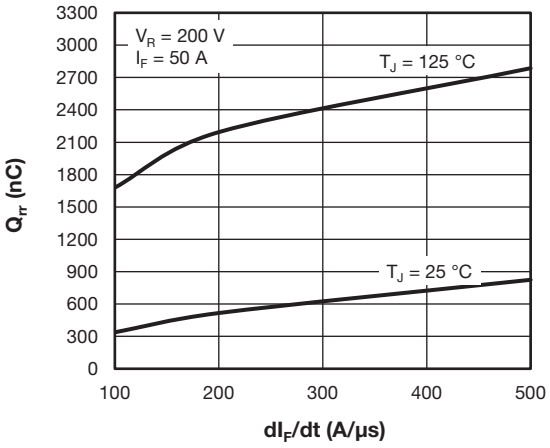

Fig. 7 - Typical Reverse Recovery Charge vs. dI_F/dt (Per Diode)

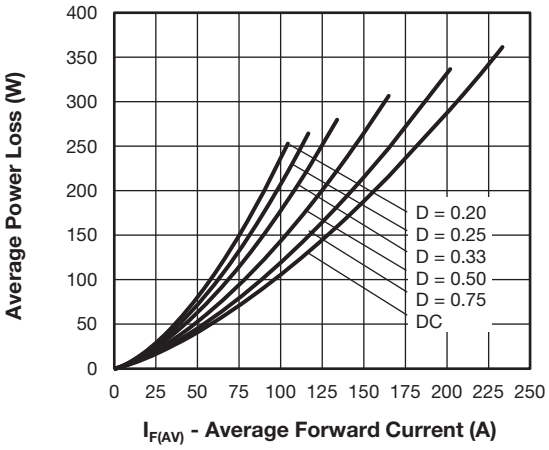

Fig. 6 - Forward Power Loss Characteristics (Per Diode)

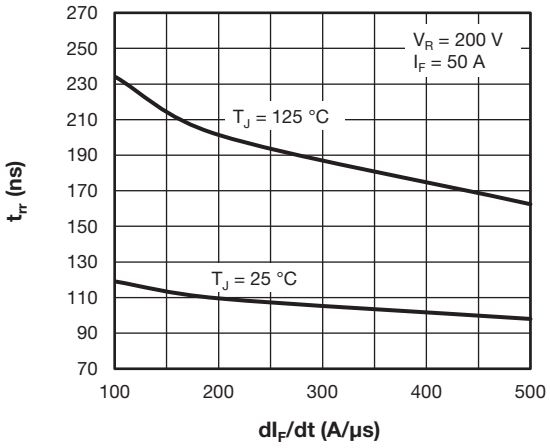

Fig. 8 - Typical Reverse Recovery Time vs. dI_F/dt (Per Diode)

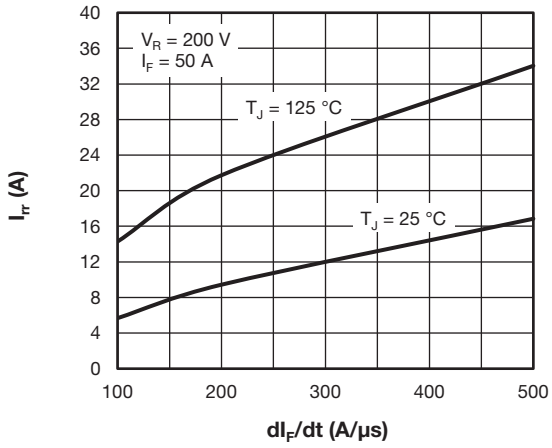

Fig. 9 - Typical Reverse Recovery Current vs. dI_F/dt (Per Diode)

For technical questions within your region: DiodesAmericas@vishay.com, DiodesAsia@vishay.com, DiodesEurope@vishay.com
THIS DOCUMENT IS SUBJECT TO CHANGE WITHOUT NOTICE. THE PRODUCTS DESCRIBED HEREIN AND THIS DOCUMENT ARE SUBJECT TO SPECIFIC DISCLAIMERS, SET FORTH AT www.vishay.com/doc?91000

ORDERING INFORMATION TABLE

Device code	VS-	UF	L	330	F	A	60
	1	2	3	4	5	6	7

1 - Vishay Semiconductors product
2 - Ultrafast rectifier
3 - Ultrafast Pt diffused, low V_F
4 - Current rating (300 = 300 A)
5 - Circuit configuration (2 separate diodes, parallel pin-out)
6 - Package indicator (SOT-227 standard insulated base)
7 - Voltage rating (60 = 600 V)

Quantity per tube is 10 pcs, M4 screw and washer included

CIRCUIT CONFIGURATION		
CIRCUIT	**CIRCUIT CONFIGURATION CODE**	**CIRCUIT DRAWING**
Two separate diodes, parallel pin-out	F	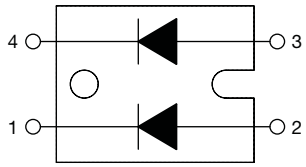 Lead Assignment 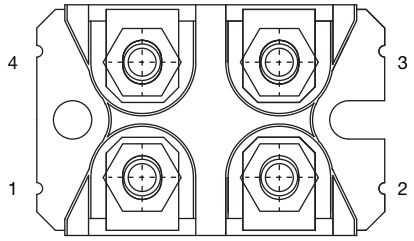

LINKS TO RELATED DOCUMENTS	
Dimensions	www.vishay.com/doc?95423
Packaging information	www.vishay.com/doc?95425

For technical questions within your region: DiodesAmericas@vishay.com, DiodesAsia@vishay.com, DiodesEurope@vishay.com
THIS DOCUMENT IS SUBJECT TO CHANGE WITHOUT NOTICE. THE PRODUCTS DESCRIBED HEREIN AND THIS DOCUMENT ARE SUBJECT TO SPECIFIC DISCLAIMERS, SET FORTH AT www.vishay.com/doc?91000

DIMENSIONS in millimeters (inches)

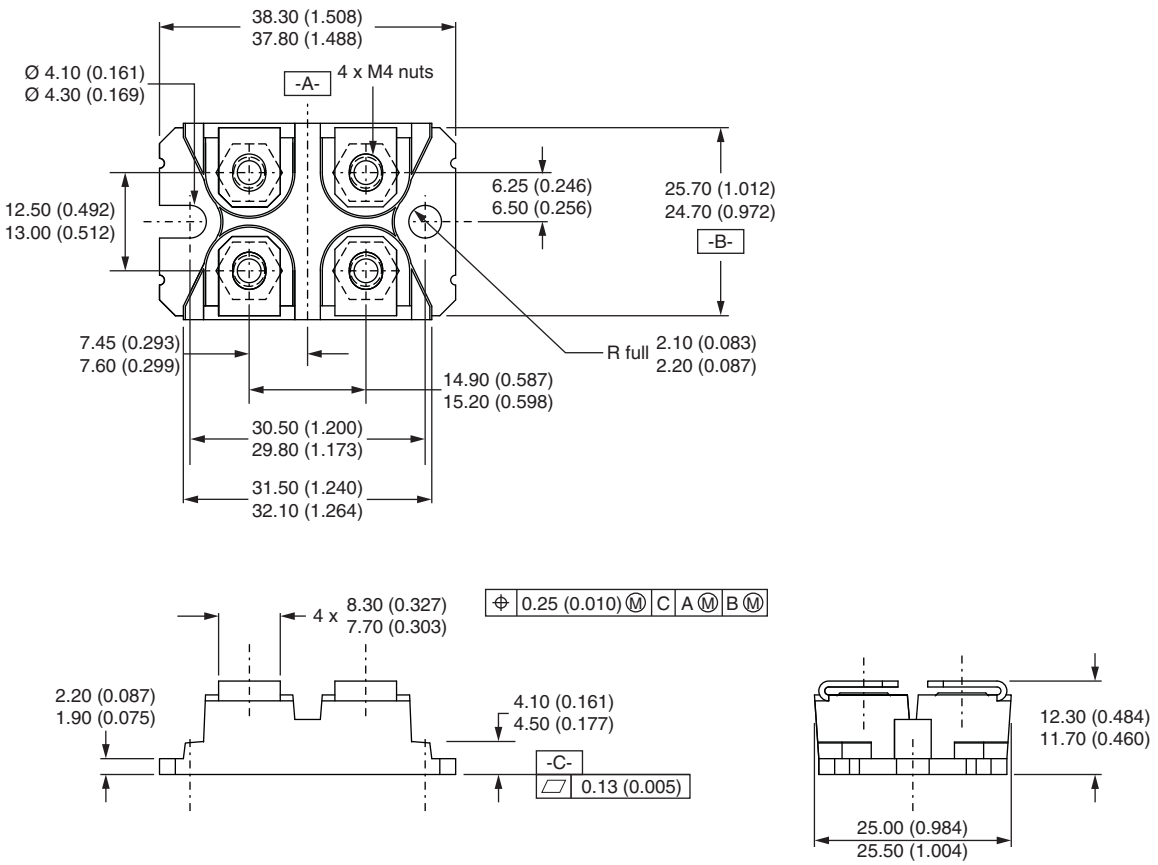

Note

- Controlling dimension: millimeter

For technical questions within your region: DiodesAmericas@vishay.com, DiodesAsia@vishay.com, DiodesEurope@vishay.com
THIS DOCUMENT IS SUBJECT TO CHANGE WITHOUT NOTICE. THE PRODUCTS DESCRIBED HEREIN AND THIS DOCUMENT ARE SUBJECT TO SPECIFIC DISCLAIMERS, SET FORTH AT www.vishay.com/doc?91000

SOT-227 Generation 2

DIMENSIONS in millimeters (inches)

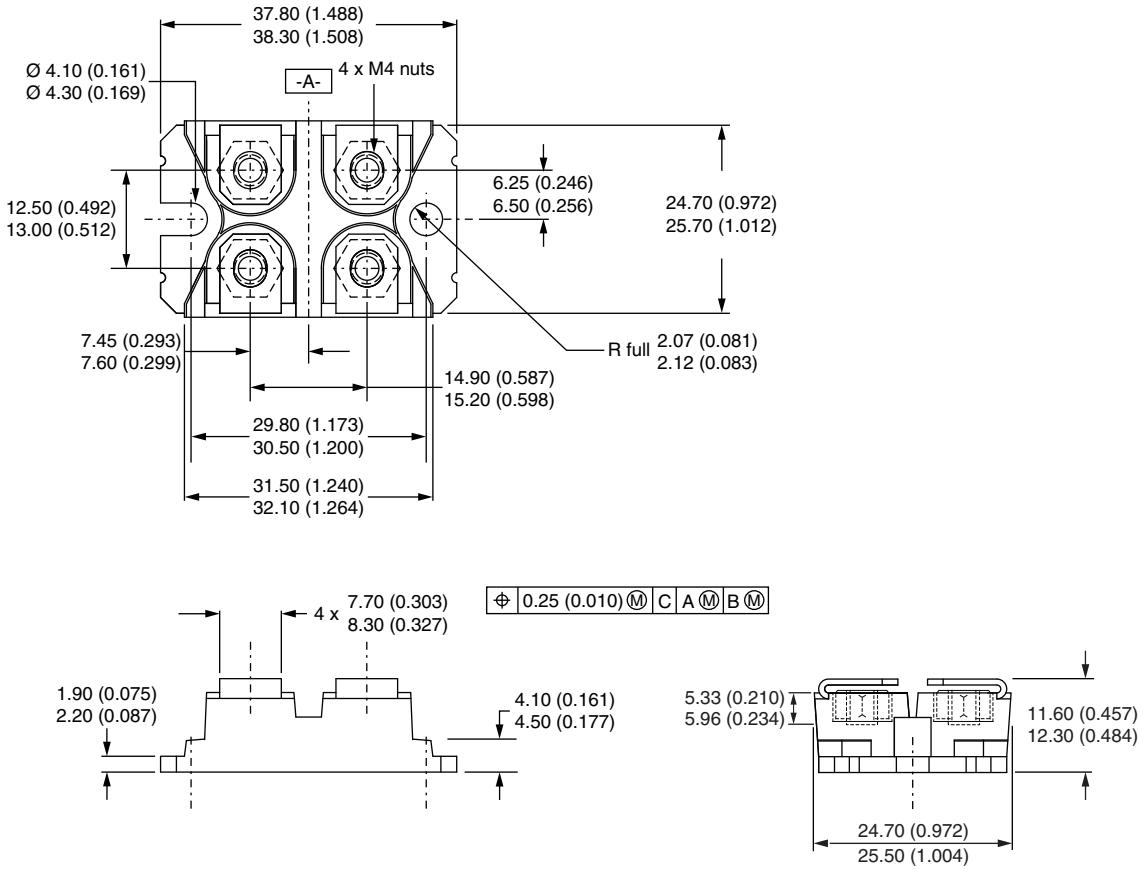

Note

- Controlling dimension: millimeter

For technical questions, contact: DiodesAmericas@vishay.com

THIS DOCUMENT IS SUBJECT TO CHANGE WITHOUT NOTICE. THE PRODUCTS DESCRIBED HEREIN AND THIS DOCUMENT ARE SUBJECT TO SPECIFIC DISCLAIMERS, SET FORTH AT www.vishay.com/doc?91000

Disclaimer

ALL PRODUCT, PRODUCT SPECIFICATIONS AND DATA ARE SUBJECT TO CHANGE WITHOUT NOTICE TO IMPROVE RELIABILITY, FUNCTION OR DESIGN OR OTHERWISE.

Vishay Intertechnology, Inc., its affiliates, agents, and employees, and all persons acting on its or their behalf (collectively, “Vishay”), disclaim any and all liability for any errors, inaccuracies or incompleteness contained in any datasheet or in any other disclosure relating to any product.

Vishay makes no warranty, representation or guarantee regarding the suitability of the products for any particular purpose or the continuing production of any product. To the maximum extent permitted by applicable law, Vishay disclaims (i) any and all liability arising out of the application or use of any product, (ii) any and all liability, including without limitation special, consequential or incidental damages, and (iii) any and all implied warranties, including warranties of fitness for particular purpose, non-infringement and merchantability.

Statements regarding the suitability of products for certain types of applications are based on Vishay's knowledge of typical requirements that are often placed on Vishay products in generic applications. Such statements are not binding statements about the suitability of products for a particular application. It is the customer's responsibility to validate that a particular product with the properties described in the product specification is suitable for use in a particular application. Parameters provided in datasheets and / or specifications may vary in different applications and performance may vary over time. All operating parameters, including typical parameters, must be validated for each customer application by the customer's technical experts. Product specifications do not expand or otherwise modify Vishay's terms and conditions of purchase, including but not limited to the warranty expressed therein.

Hyperlinks included in this datasheet may direct users to third-party websites. These links are provided as a convenience and for informational purposes only. Inclusion of these hyperlinks does not constitute an endorsement or an approval by Vishay of any of the products, services or opinions of the corporation, organization or individual associated with the third-party website. Vishay disclaims any and all liability and bears no responsibility for the accuracy, legality or content of the third-party website or for that of subsequent links.

Except as expressly indicated in writing, Vishay products are not designed for use in medical, life-saving, or life-sustaining applications or for any other application in which the failure of the Vishay product could result in personal injury or death. Customers using or selling Vishay products not expressly indicated for use in such applications do so at their own risk. Please contact authorized Vishay personnel to obtain written terms and conditions regarding products designed for such applications.

No license, express or implied, by estoppel or otherwise, to any intellectual property rights is granted by this document or by any conduct of Vishay. Product names and markings noted herein may be trademarks of their respective owners.

© 2023 VISHAY INTERTECHNOLOGY, INC. ALL RIGHTS RESERVED