# HEXFRED®
# Ultrafast Soft Recovery Diode, 70 A

SOT-227

## FEATURES

- Fast recovery time characteristic
- Electrically isolated base plate
- Antiparallel diodes
- Large creepage distance between terminal
- Simplified mechanical designs, rapid assembly
- Designed and qualified for industrial level
- UL approved file E78996
- Material categorization: for definitions of compliance please see www.vishay.com/doc?99912

Pb-free
RoHS COMPLIANT

| PRIMARY CHARACTERISTICS | |
|---|---|
| $V_R$ | 1200 V |
| $V_F$ (typical) | 2.2 V |
| $t_{rr}$ (typical) | 48 ns |
| $I_{F(DC)}$ at $T_C$, per module | 70 A at 121 °C |
| Package | SOT-227 |

## DESCRIPTION / APPLICATIONS

This SOT-227 modules with HEXFRED® rectifier are in antiparallel configuration. The antiparallel configuration is used for simple series rectifier and high voltage application. The semiconductor in the SOT-227 package is isolated from the copper base plate, allowing for common heatsinks and compact assemblies to be built.
These modules are intended for general applications such as HV power supplies, electronic welders, motor control and inverters.

**ABSOLUTE MAXIMUM RATINGS**

| PARAMETER | SYMBOL | TEST CONDITIONS | MAX. | UNITS |
|---|---|---|---|---|
| Cathode to anode voltage | $V_R$ | | 1200 | V |
| Continuous forward current, per leg | $I_F$ | $T_C$ = 121 °C | 35 | A |
| Single pulse forward current | $I_{FSM}$ | $T_J$ = 25 °C | 350 | |
| Maximum power dissipation, per leg | $P_D$ | $T_C$ = 25 °C | 357 | W |
| | | $T_C$ = 100 °C | 143 | |
| RMS isolation voltage | $V_{ISOL}$ | Any terminal to case, t = 1 minute | 2500 | V |
| Operating junction and storage temperature range | $T_J$, $T_{Stg}$ | | -55 to +150 | °C |

**ELECTRICAL SPECIFICATIONS** ($T_J$ = 25 °C unless otherwise specified)

| PARAMETER | SYMBOL | TEST CONDITIONS | MIN. | TYP. | MAX. | UNITS |
|---|---|---|---|---|---|---|
| Cathode to anode breakdown voltage | $V_{BR}$ | $I_R$ = 100 μA | 1200 | - | - | V |
| Forward voltage, per leg | $V_{FM}$ | $I_F$ = 30 A | - | 2.2 | 3.0 | |
| | | $I_F$ = 60 A | - | 2.8 | 4.0 | |
| | | $I_F$ = 30 A, $T_J$ = 125 °C | - | 2.13 | - | |
| | | $I_F$ = 60 A, $T_J$ = 125 °C | - | 2.70 | - | |
| | | $I_F$ = 30 A, $T_J$ = 150 °C | - | 2.04 | - | |
| | | $I_F$ = 60 A, $T_J$ = 150 °C | - | 2.65 | - | |
| Reverse leakage current, per leg | $I_{RM}$ | $V_R$ = $V_R$ rated | - | 2.0 | 75 | μA |
| | | $T_J$ = 125 °C, $V_R$ = $V_R$ rated | - | 1.6 | 5 | mA |
| | | $T_J$ = 150 °C, $V_R$ = $V_R$ rated | - | 5 | 10 | |


For technical questions within your region: DiodesAmericas@vishay.com, DiodesAsia@vishay.com, DiodesEurope@vishay.com
THIS DOCUMENT IS SUBJECT TO CHANGE WITHOUT NOTICE. THE PRODUCTS DESCRIBED HEREIN AND THIS DOCUMENT ARE SUBJECT TO SPECIFIC DISCLAIMERS, SET FORTH AT www.vishay.com/doc?91000

| **DYNAMIC RECOVERY CHARACTERISTICS** ($T_J$ = 25 °C unless otherwise specified) | | | | | | | |
|---|---|---|---|---|---|---|---|
| **PARAMETER** | **SYMBOL** | **TEST CONDITIONS** | | **MIN.** | **TYP.** | **MAX.** | **UNITS** |
| Reverse recovery time, per leg | $t_{rr}$ | $I_F$ = 1 A; $dI_F/dt$ = 200 A/μs; $V_R$ = 30 V | | - | 48 | - | ns |
| | | $T_J$ = 25 °C | $I_F$ = 50 A<br>$dI_F/dt$ = - 200 A/μs<br>$V_R$ = 200 V | - | 145 | - | |
| | | $T_J$ = 125 °C | | - | 218 | - | |
| Peak recovery current, per leg | $I_{RRM}$ | $T_J$ = 25 °C | | - | 13 | - | A |
| | | $T_J$ = 125 °C | | - | 19 | - | |
| Reverse recovery charge, per leg | $Q_{rr}$ | $T_J$ = 25 °C | | - | 910 | - | nC |
| | | $T_J$ = 125 °C | | - | 1920 | - | |
| Junction capacitance, per leg | $C_T$ | $V_R$ = 1200 V | | - | 27 | - | pF |

| **THERMAL - MECHANICAL SPECIFICATIONS** | | | | | | |
|---|---|---|---|---|---|---|
| **PARAMETER** | **SYMBOL** | **TEST CONDITIONS** | **MIN.** | **TYP.** | **MAX.** | **UNITS** |
| Junction to case, single leg conducting | $R_{thJC}$ | | - | - | 0.35 | °C/W |
| Junction to case, both legs conducting | | | - | - | 0.175 | |
| Case to heatsink | $R_{thCS}$ | Flat, greased surface | - | 0.05 | - | |
| Weight | | | - | 30 | - | g |
| Mounting torque | | Torque to terminal | - | - | 1.1 (9.7) | Nm (lbf.in) |
| | | Torque to heatsink | - | - | 1.8 (15.9) | Nm (lbf.in) |
| Case style | | | SOT-227 | | | |

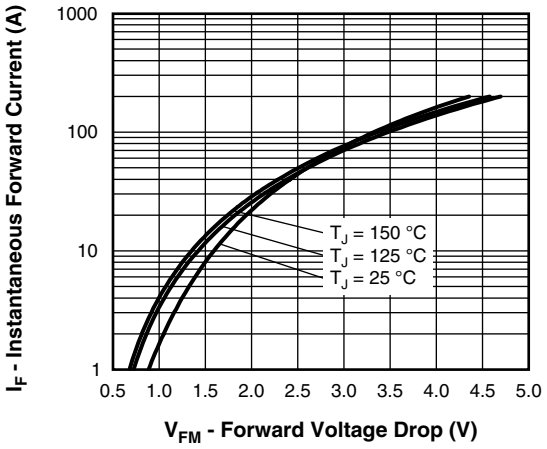


Fig. 1 - Typical Forward Voltage Drop Characteristics

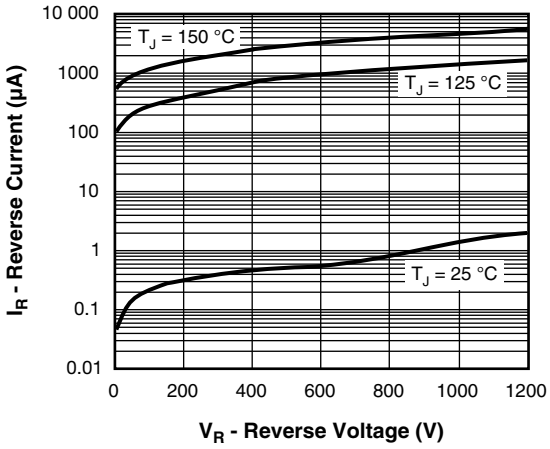


Fig. 2 - Typical Values of Reverse Current vs. Reverse Voltage

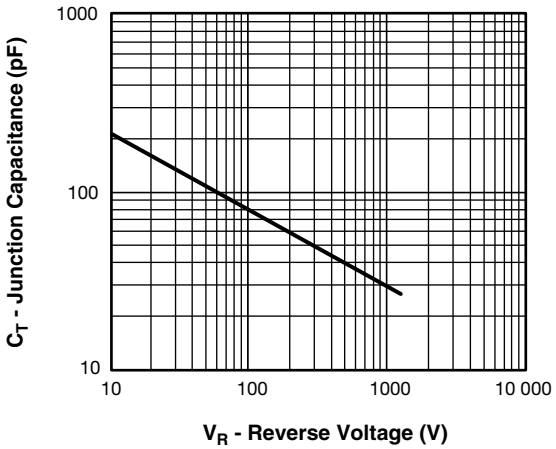


Fig. 3 - Typical Junction Capacitance vs. Reverse Voltage


For technical questions within your region: DiodesAmericas@vishay.com, DiodesAsia@vishay.com, DiodesEurope@vishay.com
THIS DOCUMENT IS SUBJECT TO CHANGE WITHOUT NOTICE. THE PRODUCTS DESCRIBED HEREIN AND THIS DOCUMENT ARE SUBJECT TO SPECIFIC DISCLAIMERS, SET FORTH AT www.vishay.com/doc?91000

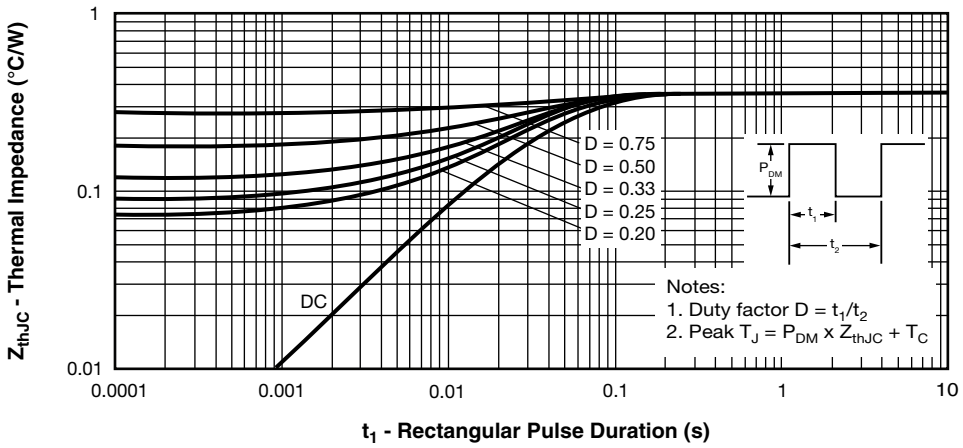


Fig. 4 - Maximum Thermal Impedance $Z_{thJC}$ Characteristics

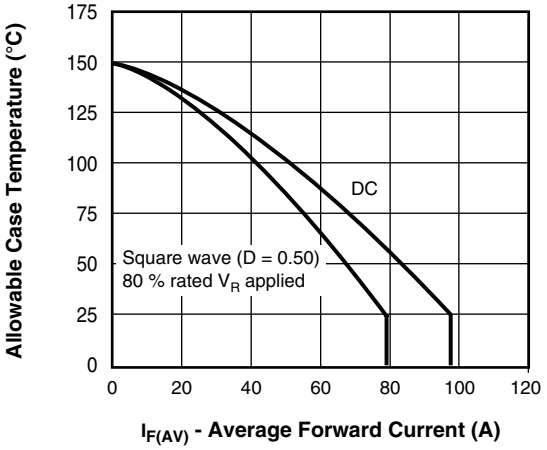


Fig. 5 - Maximum Allowable Case Temperature vs. Average Forward Current

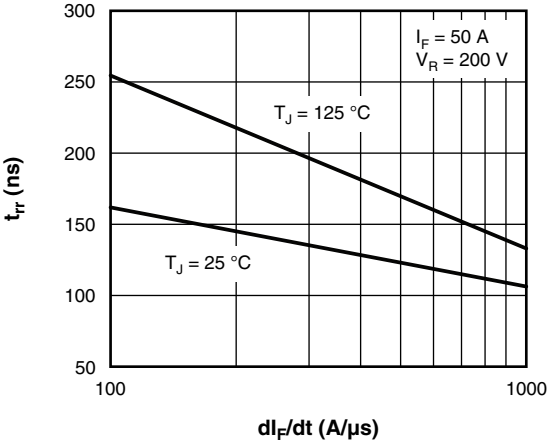


Fig. 7 - Typical Reverse Recovery Time vs. $dI_F/dt$

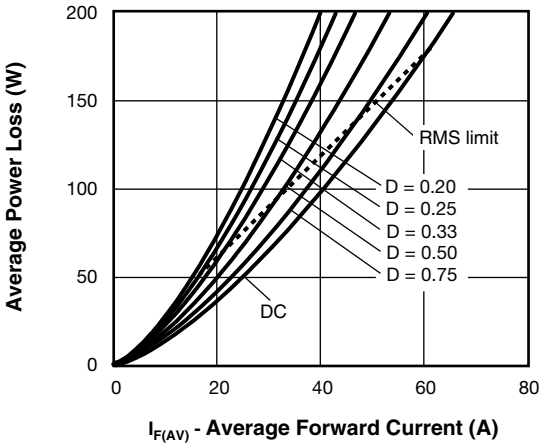


Fig. 6 - Forward Power Loss Characteristics

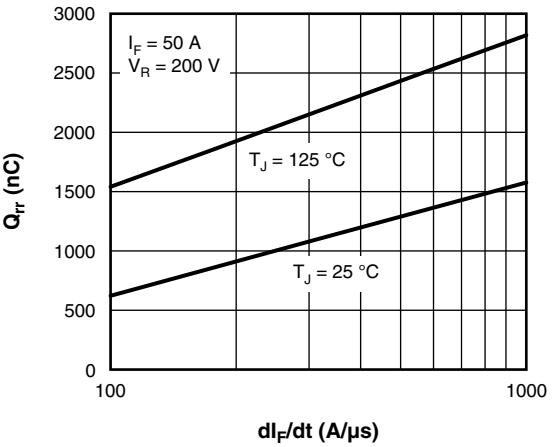


Fig. 8 - Typical Stored Charge vs. $dI_F/dt$

**Note**

(1) Formula used: $T_C = T_J - (Pd + Pd_{REV}) \times R_{thJC}$;
Pd = Forward power loss = $I_{F(AV)} \times V_{FM}$ at $(I_{F(AV)}/D)$ (see fig. 5);
$Pd_{REV}$ = Inverse power loss = $V_{R1} \times I_R (1 - D)$; $I_R$ at $V_{R1}$ = Rated $V_R$


For technical questions within your region: DiodesAmericas@vishay.com, DiodesAsia@vishay.com, DiodesEurope@vishay.com
THIS DOCUMENT IS SUBJECT TO CHANGE WITHOUT NOTICE. THE PRODUCTS DESCRIBED HEREIN AND THIS DOCUMENT ARE SUBJECT TO SPECIFIC DISCLAIMERS, SET FORTH AT www.vishay.com/doc?91000

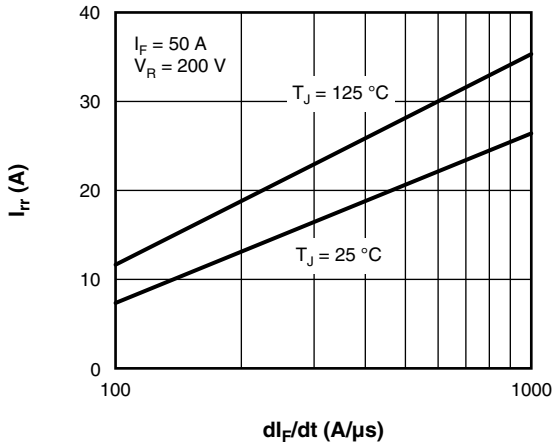


Fig. 9 - Typical Peak Recovery Current vs. $dI_F/dt$

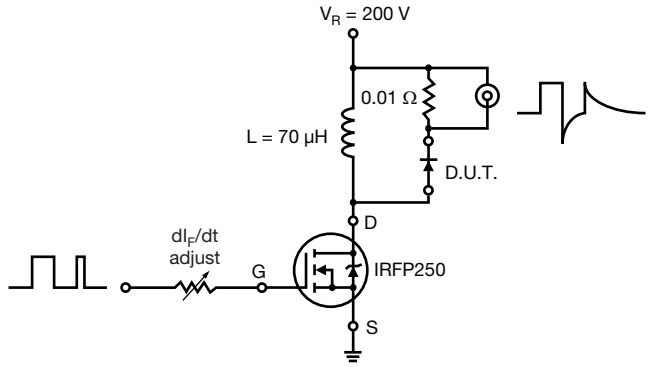


Fig. 10 - Reverse Recovery Parameter Test Circuit

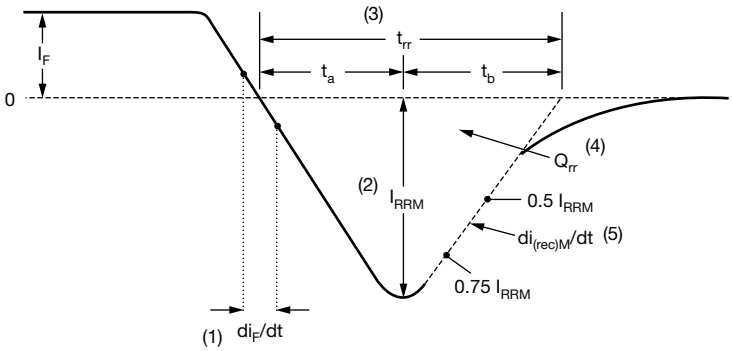


(1) $di_F/dt$ - rate of change of current through zero crossing

(2) $I_{RRM}$ - peak reverse recovery current

(3) $t_{rr}$ - reverse recovery time measured from zero crossing point of negative going $I_F$ to point where a line passing through 0.75 $I_{RRM}$ and 0.50 $I_{RRM}$ extrapolated to zero current.

(4) $Q_{rr}$ - area under curve defined by $t_{rr}$ and $I_{RRM}$

$$Q_{rr} = \frac{t_{rr} \times I_{RRM}}{2}$$

(5) $di_{(rec)M}/dt$ - peak rate of change of current during $t_b$ portion of $t_{rr}$

Fig. 11 - Reverse Recovery Waveform and Definitions


For technical questions within your region: DiodesAmericas@vishay.com, DiodesAsia@vishay.com, DiodesEurope@vishay.com
THIS DOCUMENT IS SUBJECT TO CHANGE WITHOUT NOTICE. THE PRODUCTS DESCRIBED HEREIN AND THIS DOCUMENT ARE SUBJECT TO SPECIFIC DISCLAIMERS, SET FORTH AT www.vishay.com/doc?91000

## ORDERING INFORMATION TABLE

| Device code | VS- | HF | A | 70 | E | A | 120 |
|---|---|---|---|---|---|---|---|
| | 1 | 2 | 3 | 4 | 5 | 6 | 7 |

1 - Vishay Semiconductors product
2 - HEXFRED® family
3 - Process designator (A = electron irradiated)
4 - Average current (70 = 70 A)
5 - Circuit configuration (two separate diodes, antiparallel pin-out)
6 - Package indicator (SOT-227 standard insulated base)
7 - Voltage rating (120 = 1200 V)

| CIRCUIT CONFIGURATION | | |
|---|---|---|
| **CIRCUIT** | **CIRCUIT CONFIGURATION CODE** | **CIRCUIT DRAWING** |
| Two separate diodes, antiparallel pin-out | E | 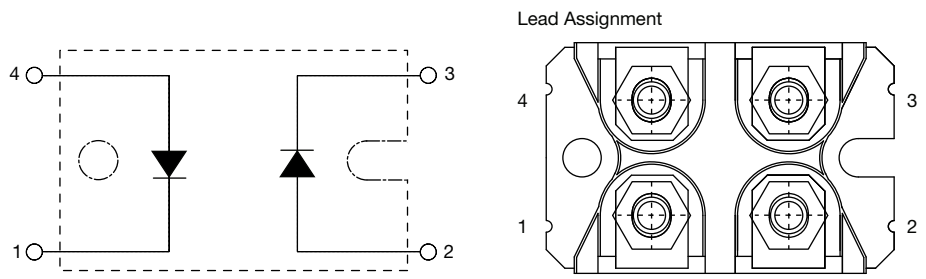  |

| LINKS TO RELATED DOCUMENTS | |
|---|---|
| Dimensions | www.vishay.com/doc?95423 |
| Part marking information | www.vishay.com/doc?95425 |


For technical questions within your region: DiodesAmericas@vishay.com, DiodesAsia@vishay.com, DiodesEurope@vishay.com
THIS DOCUMENT IS SUBJECT TO CHANGE WITHOUT NOTICE. THE PRODUCTS DESCRIBED HEREIN AND THIS DOCUMENT ARE SUBJECT TO SPECIFIC DISCLAIMERS, SET FORTH AT www.vishay.com/doc?91000

# SOT-227 Generation 2

**DIMENSIONS** in millimeters (inches)

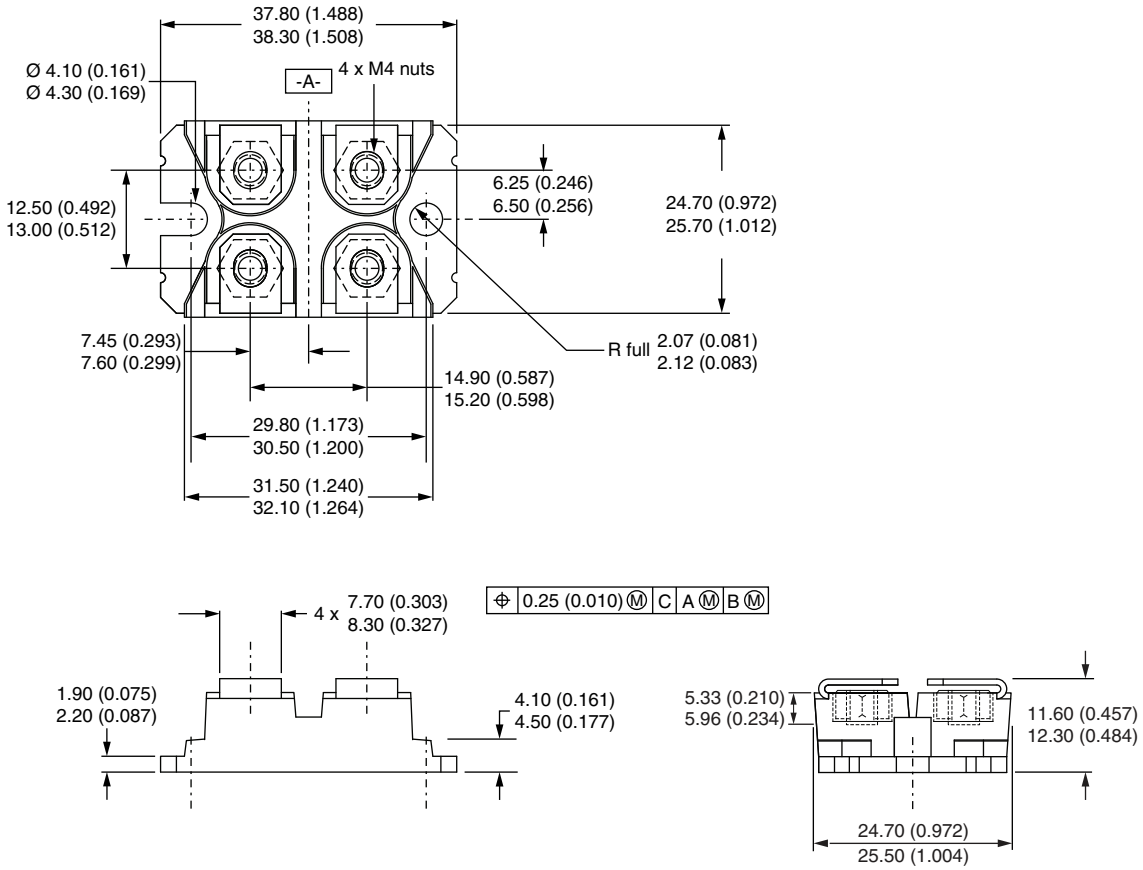


**Note**

- Controlling dimension: millimeter



For technical questions, contact: DiodesAmericas@vishay.com

THIS DOCUMENT IS SUBJECT TO CHANGE WITHOUT NOTICE. THE PRODUCTS DESCRIBED HEREIN AND THIS DOCUMENT ARE SUBJECT TO SPECIFIC DISCLAIMERS, SET FORTH AT www.vishay.com/doc?91000

# Disclaimer

ALL PRODUCT, PRODUCT SPECIFICATIONS AND DATA ARE SUBJECT TO CHANGE WITHOUT NOTICE TO IMPROVE RELIABILITY, FUNCTION OR DESIGN OR OTHERWISE.

Vishay Intertechnology, Inc., its affiliates, agents, and employees, and all persons acting on its or their behalf (collectively, “Vishay”), disclaim any and all liability for any errors, inaccuracies or incompleteness contained in any datasheet or in any other disclosure relating to any product.

Vishay makes no warranty, representation or guarantee regarding the suitability of the products for any particular purpose or the continuing production of any product. To the maximum extent permitted by applicable law, Vishay disclaims (i) any and all liability arising out of the application or use of any product, (ii) any and all liability, including without limitation special, consequential or incidental damages, and (iii) any and all implied warranties, including warranties of fitness for particular purpose, non-infringement and merchantability.

Statements regarding the suitability of products for certain types of applications are based on Vishay's knowledge of typical requirements that are often placed on Vishay products in generic applications. Such statements are not binding statements about the suitability of products for a particular application. It is the customer's responsibility to validate that a particular product with the properties described in the product specification is suitable for use in a particular application. Parameters provided in datasheets and / or specifications may vary in different applications and performance may vary over time. All operating parameters, including typical parameters, must be validated for each customer application by the customer's technical experts. Product specifications do not expand or otherwise modify Vishay's terms and conditions of purchase, including but not limited to the warranty expressed therein.

Hyperlinks included in this datasheet may direct users to third-party websites. These links are provided as a convenience and for informational purposes only. Inclusion of these hyperlinks does not constitute an endorsement or an approval by Vishay of any of the products, services or opinions of the corporation, organization or individual associated with the third-party website. Vishay disclaims any and all liability and bears no responsibility for the accuracy, legality or content of the third-party website or for that of subsequent links.

Except as expressly indicated in writing, Vishay products are not designed for use in medical, life-saving, or life-sustaining applications or for any other application in which the failure of the Vishay product could result in personal injury or death. Customers using or selling Vishay products not expressly indicated for use in such applications do so at their own risk. Please contact authorized Vishay personnel to obtain written terms and conditions regarding products designed for such applications.

No license, express or implied, by estoppel or otherwise, to any intellectual property rights is granted by this document or by any conduct of Vishay. Product names and markings noted herein may be trademarks of their respective owners.

***© 2023 VISHAY INTERTECHNOLOGY, INC. ALL RIGHTS RESERVED***