HEXFRED® Ultrafast Diodes, 300 A (INT-A-PAK Power Modules)

INT-A-PAK

FEATURES

- Electrically isolated: DCB base plate
- Standard JEDEC® package
- Simplified mechanical designs, rapid assembly
- High surge capability
- Large creepage distances
- Case style INT-A-PAK
- Designed and qualified for industrial level
- Material categorization: for definitions of compliance please see www.vishay.com/doc?99912

RoHS COMPLIANT

REMARKS

- Product reliability results valid for T_J = 150 °C
- Recommended operation temperature T_{op} = 150 °C

PRIMARY CHARACTERISTICS	
V_R	1200 V
V_F (typical) at 300 A at 25 °C	2.18 V
t_{rr} (typical) at 45 A	233 ns
$I_{F(DC)}$ at T_C	300 A at 60 °C
Package	INT-A-PAK
Circuit configuration	Single diode

ABSOLUTE MAXIMUM RATINGS

PARAMETER	SYMBOL	TEST CONDITIONS	VALUES	UNITS
Cathode to anode voltage	V_R		1200	V
Continuous forward current	I_F	T_C = 25 °C	375	A
		T_C = 60 °C	300	
Single pulse forward current	I_{FSM}	T_J = 25 °C	2400	
Maximum power dissipation	P_D	T_C = 25 °C	1040	W
		T_C = 60 °C	750	
RMS isolation voltage	V_{ISOL}	50 Hz, circuit to base, all terminal shorted, t = 1 s	3500	V
Junction temperature range	T_J		-40 to +150	°C
Storage temperature range	T_{Stg}		-40 to +150	

ELECTRICAL SPECIFICATIONS PER LEG (T_J = 25 °C unless otherwise specified)

PARAMETER	SYMBOL	TEST CONDITIONS	MIN.	TYP.	MAX.	UNITS
Cathode to anode breakdown voltage	V_{BR}	I_R = 500 μA	1200	-	-	V
Maximum forward voltage	V_{FM}	I_F = 300 A	-	2.18	2.23	
		I_F = 300 A, T_J = 150 °C	-	2.24	2.47	
Maximum reverse leakage current	I_{RM}	V_R = 1200 V	-	0.06	0.2	mA
		T_J = 150 °C, V_R = 1200 V	-	-	20	

For technical questions, contact: DiodesAmericas@vishay.com
THIS DOCUMENT IS SUBJECT TO CHANGE WITHOUT NOTICE. THE PRODUCTS DESCRIBED HEREIN AND THIS DOCUMENT ARE SUBJECT TO SPECIFIC DISCLAIMERS, SET FORTH AT www.vishay.com/doc?91000

DYNAMIC RECOVERY CHARACTERISTICS (T_J = 25 °C unless otherwise specified)							
PARAMETER	SYMBOL	TEST CONDITIONS		MIN.	TYP.	MAX.	UNITS
Diode reverse recovery charge	Q_{rr}	T_J = 25 °C	I_F = 45 A V_R = 400 V dI_F/dt = 500 A/μs	-	3.5	-	μC
		T_J = 125 °C		-	10.4	-	
Reverse recovery time	t_{rr}	T_J = 25 °C		-	233	-	ns
		T_J = 125 °C		-	396	-	
Reverse recovery current	I_{rr}	T_J = 25 °C		-	30	-	A
		T_J = 125 °C		-	53	-	

THERMAL - MECHANICAL SPECIFICATIONS				
PARAMETER	SYMBOL	TEST CONDITIONS	VALUES	UNITS
Maximum internal thermal resistance, junction to case per leg	R_{thJC}	DC operation	0.12	°C/W
Typical thermal resistance, case to heatsink per module	R_{thCS}	Mounting surface flat, smooth, and greased	0.05	
Mounting torque ± 10 % to heatsink / busbar		A mounting compound is recommended and the torque should be rechecked after a period of 3 hours to allow for the spread of the compound	4 to 6	Nm
Approximate weight			200	g
			7.1	oz.
Case style			INT-A-PAK	

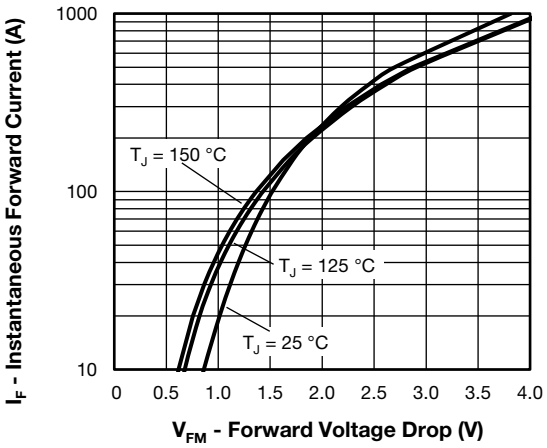

Fig. 1 - Typical Forward Voltage Drop Characteristics

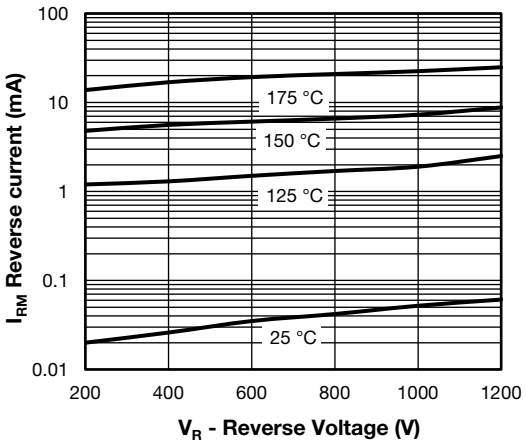

Fig. 2 - Typical Value of Reverse Current vs. Reverse Voltage

For technical questions, contact: DiodesAmericas@vishay.com
THIS DOCUMENT IS SUBJECT TO CHANGE WITHOUT NOTICE. THE PRODUCTS DESCRIBED HEREIN AND THIS DOCUMENT ARE SUBJECT TO SPECIFIC DISCLAIMERS, SET FORTH AT www.vishay.com/doc?91000

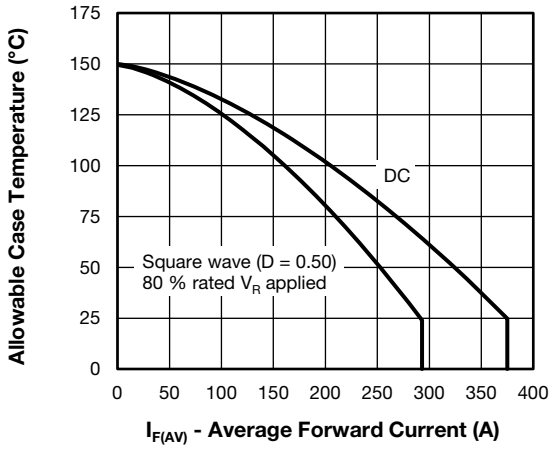

Fig. 3 - Maximum Allowable Case Temperature vs. Average Forward Current

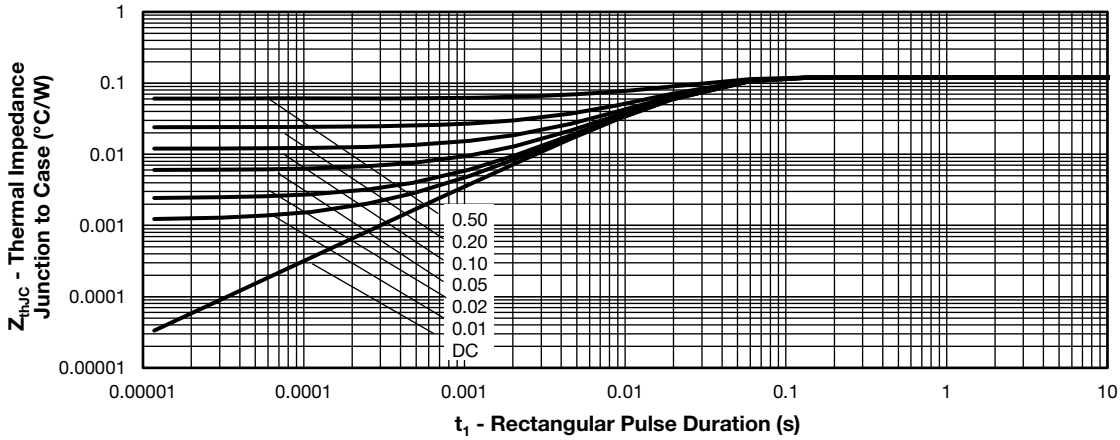

Fig. 4 - Maximum Thermal Impedance R_{thJC} Characteristics

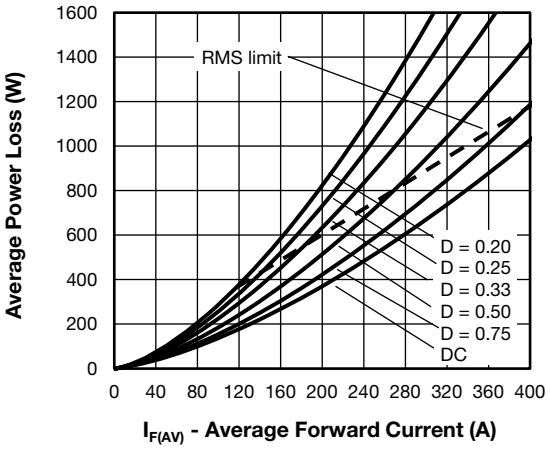

Fig. 5 - Forward Power Loss Characteristics

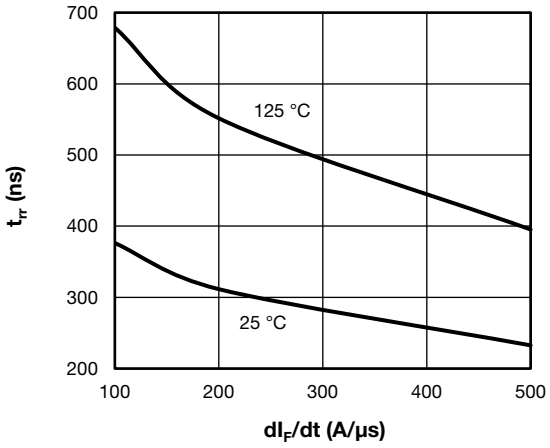

Fig. 6 - Typical Reverse Recovery Time vs. dI_F/dt

For technical questions, contact: DiodesAmericas@vishay.com
THIS DOCUMENT IS SUBJECT TO CHANGE WITHOUT NOTICE. THE PRODUCTS DESCRIBED HEREIN AND THIS DOCUMENT ARE SUBJECT TO SPECIFIC DISCLAIMERS, SET FORTH AT www.vishay.com/doc?91000

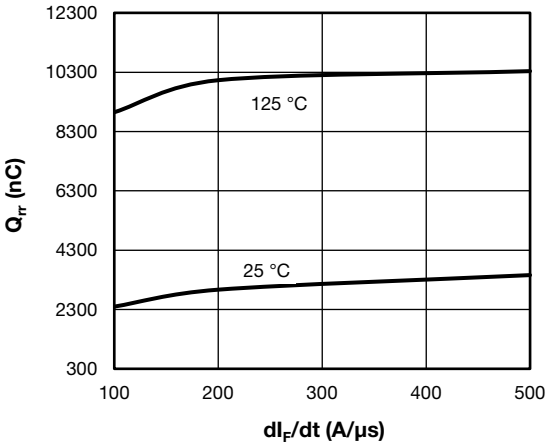

Fig. 7 - Typical Reverse Recovery Charge vs. dI_F/dt

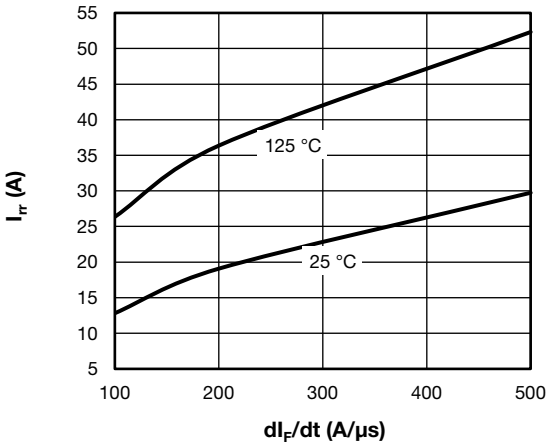

Fig. 8 - Typical Reverse Recovery Current vs. dI_F/dt

ORDERING INFORMATION TABLE

Device code	VS-VS	KE	U	300	/	12	PbF
	1	2	3	4		5	6

1 - Vishay Semiconductors product
2 - KE = circuit configuration
3 - U = ultrafast diode
4 - Current rating 300 = 300 A
5 - Voltage rating (12 = 1200 V)
6 - PbF = lead (Pb)-free

CIRCUIT CONFIGURATION

For technical questions, contact: DiodesAmericas@vishay.com
THIS DOCUMENT IS SUBJECT TO CHANGE WITHOUT NOTICE. THE PRODUCTS DESCRIBED HEREIN AND THIS DOCUMENT ARE SUBJECT TO SPECIFIC DISCLAIMERS, SET FORTH AT www.vishay.com/doc?91000

DIMENSIONS in (inches) millimeters **INT-A-PAK DBC**

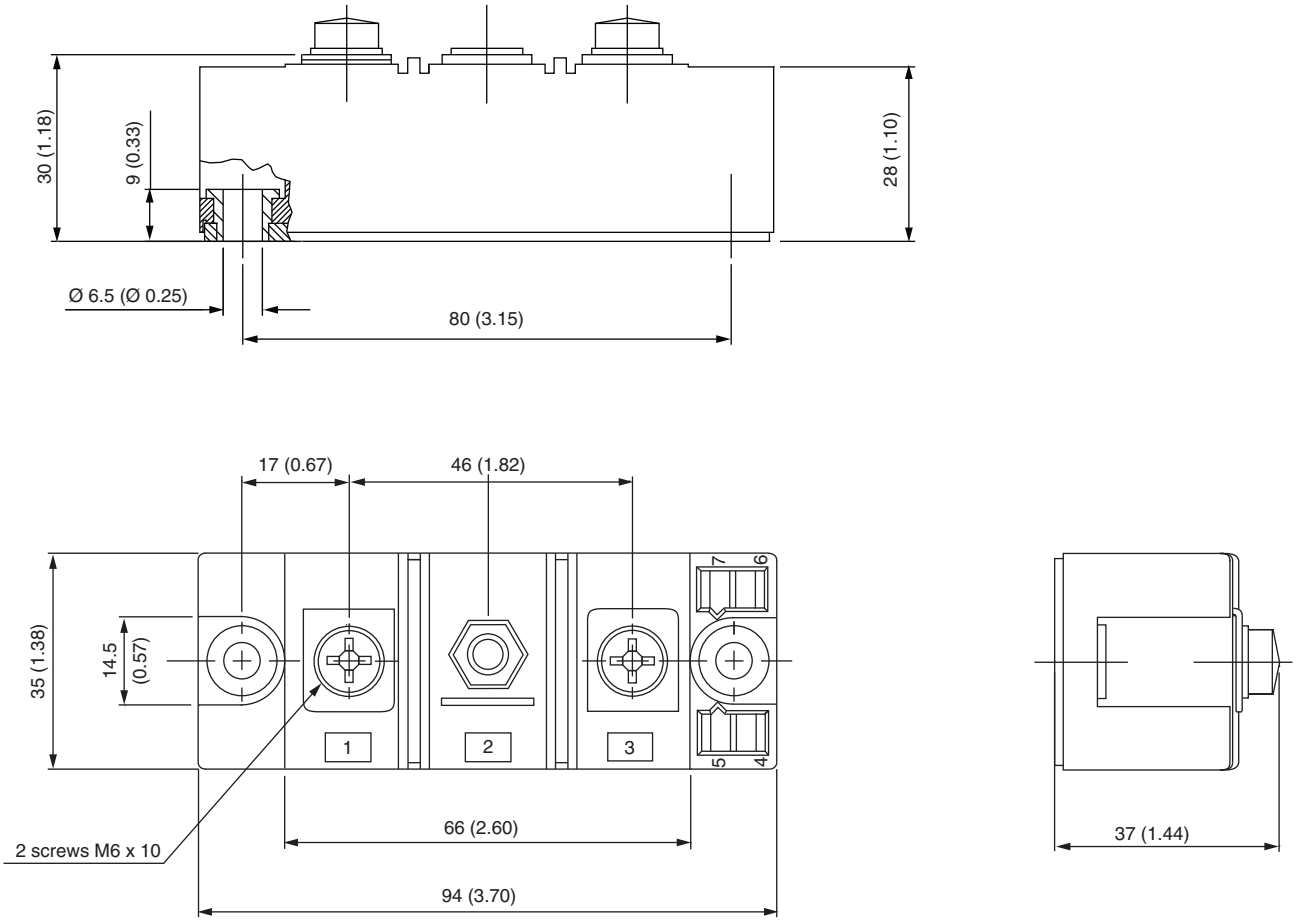

For technical questions, contact: DiodesAmericas@vishay.com
THIS DOCUMENT IS SUBJECT TO CHANGE WITHOUT NOTICE. THE PRODUCTS DESCRIBED HEREIN AND THIS DOCUMENT ARE SUBJECT TO SPECIFIC DISCLAIMERS, SET FORTH AT www.vishay.com/doc?91000

INT-A-PAK DBC

DIMENSIONS in millimeters (inches)

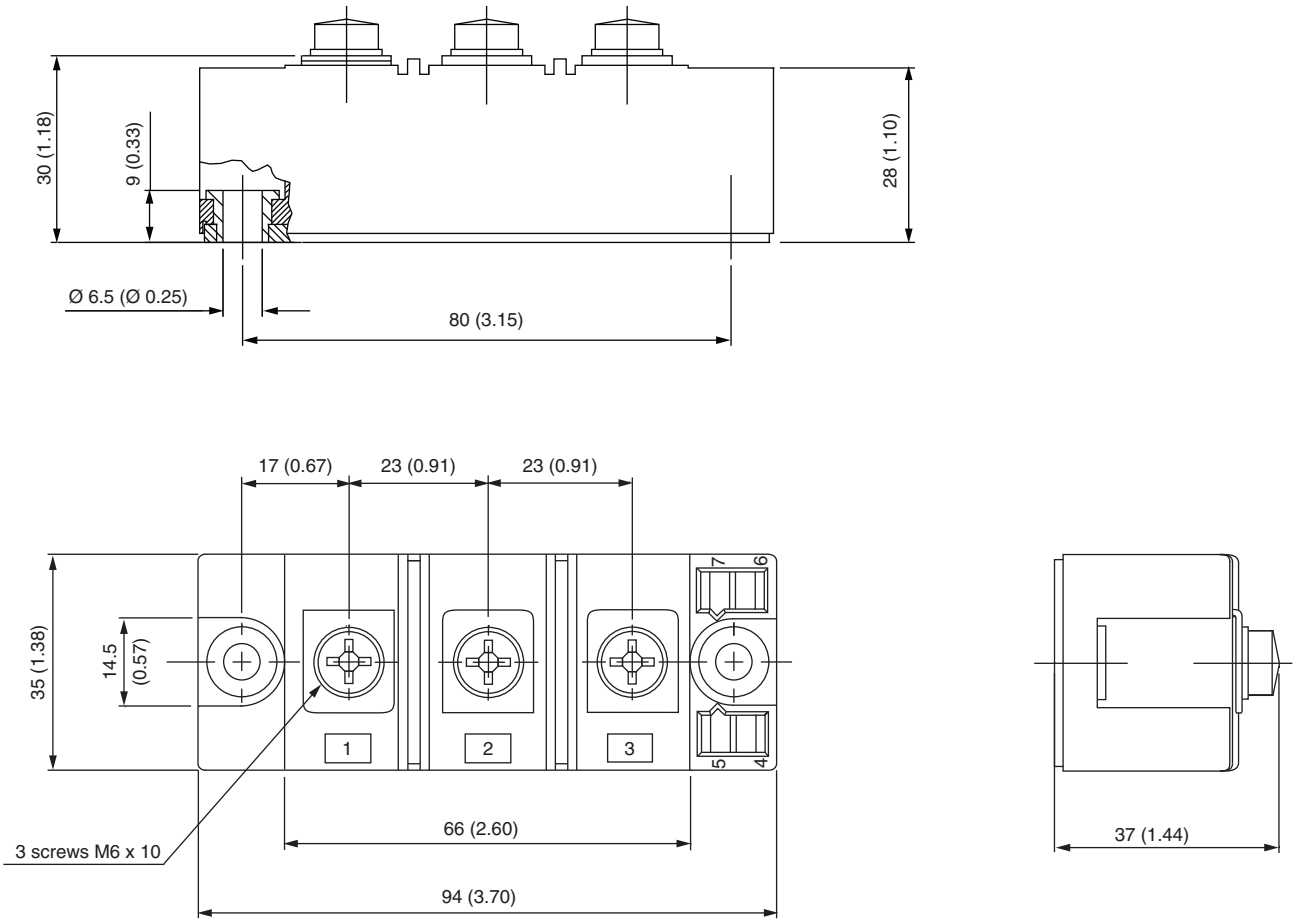

Disclaimer

ALL PRODUCT, PRODUCT SPECIFICATIONS AND DATA ARE SUBJECT TO CHANGE WITHOUT NOTICE TO IMPROVE RELIABILITY, FUNCTION OR DESIGN OR OTHERWISE.

Vishay Intertechnology, Inc., its affiliates, agents, and employees, and all persons acting on its or their behalf (collectively, “Vishay”), disclaim any and all liability for any errors, inaccuracies or incompleteness contained in any datasheet or in any other disclosure relating to any product.

Vishay makes no warranty, representation or guarantee regarding the suitability of the products for any particular purpose or the continuing production of any product. To the maximum extent permitted by applicable law, Vishay disclaims (i) any and all liability arising out of the application or use of any product, (ii) any and all liability, including without limitation special, consequential or incidental damages, and (iii) any and all implied warranties, including warranties of fitness for particular purpose, non-infringement and merchantability.

Statements regarding the suitability of products for certain types of applications are based on Vishay's knowledge of typical requirements that are often placed on Vishay products in generic applications. Such statements are not binding statements about the suitability of products for a particular application. It is the customer's responsibility to validate that a particular product with the properties described in the product specification is suitable for use in a particular application. Parameters provided in datasheets and / or specifications may vary in different applications and performance may vary over time. All operating parameters, including typical parameters, must be validated for each customer application by the customer's technical experts. Product specifications do not expand or otherwise modify Vishay's terms and conditions of purchase, including but not limited to the warranty expressed therein.

Hyperlinks included in this datasheet may direct users to third-party websites. These links are provided as a convenience and for informational purposes only. Inclusion of these hyperlinks does not constitute an endorsement or an approval by Vishay of any of the products, services or opinions of the corporation, organization or individual associated with the third-party website. Vishay disclaims any and all liability and bears no responsibility for the accuracy, legality or content of the third-party website or for that of subsequent links.

Except as expressly indicated in writing, Vishay products are not designed for use in medical, life-saving, or life-sustaining applications or for any other application in which the failure of the Vishay product could result in personal injury or death. Customers using or selling Vishay products not expressly indicated for use in such applications do so at their own risk. Please contact authorized Vishay personnel to obtain written terms and conditions regarding products designed for such applications.

No license, express or implied, by estoppel or otherwise, to any intellectual property rights is granted by this document or by any conduct of Vishay. Product names and markings noted herein may be trademarks of their respective owners.

© 2023 VISHAY INTERTECHNOLOGY, INC. ALL RIGHTS RESERVED