HEXFRED®
Ultrafast Soft Recovery Diode, 210 A

HALF-PAK (D-67)

FEATURES

- Very low Q_{rr} and t_{rr}
- Designed and qualified for industrial level
- UL approved file E222165
- Material categorization: for definitions of compliance please see www.vishay.com/doc?99912

RoHS COMPLIANT

BENEFITS

- Reduced RFI and EMI
- Reduced snubbing

DESCRIPTION

HEXFRED® diodes are optimized to reduce losses and EMI/RFI in high frequency power conditioning systems. An extensive characterization of the recovery behavior for different values of current, temperature and dI_F/dt simplifies the calculations of losses in the operating conditions. The softness of the recovery eliminates the need for a snubber in most applications. These devices are ideally suited for power converters, motors drives and other applications where switching losses are significant portion of the total losses.

PRIMARY CHARACTERISTICS	
I_F (maximum)	210 A
V_R	400 V
$I_{F(DC)}$ at T_C	106 A at 100 °C
Package	HALF-PAK (D-67)
Circuit configuration	Single diode

ABSOLUTE MAXIMUM RATINGS

PARAMETER	SYMBOL	TEST CONDITIONS	VALUES	UNITS
Cathode to anode voltage	V_R		400	V
Continuous forward current	I_F	T_C = 25 °C	210	A
		T_C = 100 °C	106	
Single pulse forward current	I_{FSM}	Limited by junction temperature	600	
Non-repetitive avalanche energy	E_{AS}	L = 100 µH, duty cycle limited by maximum T_J	1.4	mJ
Maximum power dissipation	P_D	T_C = 25 °C	329	W
		T_C = 100 °C	132	
Operating junction and storage temperature range	T_J, T_{Stg}		-55 to +150	°C

ELECTRICAL SPECIFICATIONS (T_J = 25 °C unless otherwise specified)

PARAMETER	SYMBOL	TEST CONDITIONS		MIN.	TYP.	MAX.	UNITS
Cathode to anode breakdown voltage	V_{BR}	I_R = 100 µA		400	-	-	V
Maximum forward voltage	V_{FM}	I_F = 90 A	See fig. 1	-	1.06	1.45	
		I_F = 180 A		-	1.2	1.67	
		I_F = 90 A, T_J = 125 °C		-	0.96	1.23	
Maximum reverse leakage current	I_{RM}	T_J = 125 °C, V_R = 400 V	See fig. 2	-	0.6	2	mA
Junction capacitance	C_T	V_R = 200 V	See fig. 3	-	180	260	pF
Series inductance	L_S	From top of terminal hole to mounting plane		-	7.0	-	nH

For technical questions within your region: DiodesAmericas@vishay.com, DiodesAsia@vishay.com, DiodesEurope@vishay.com
THIS DOCUMENT IS SUBJECT TO CHANGE WITHOUT NOTICE. THE PRODUCTS DESCRIBED HEREIN AND THIS DOCUMENT ARE SUBJECT TO SPECIFIC DISCLAIMERS, SET FORTH AT www.vishay.com/doc?91000

DYNAMIC RECOVERY CHARACTERISTICS (T_J = 25 °C unless otherwise specified)							
PARAMETER	SYMBOL	TEST CONDITIONS		MIN.	TYP.	MAX.	UNITS
Reverse recovery time See fig. 5	t_{rr}	T_J = 25 °C	I_F = 90 A, dI_F/dt = 200 A/μs, V_R = 200 V	-	90	140	ns
		T_J = 125 °C		-	158	240	
Peak recovery current See fig. 6	I_{RRM}	T_J = 25 °C		-	9	17	A
		T_J = 125 °C		-	15	30	
Reverse recovery charge See fig. 7	Q_{rr}	T_J = 25 °C		-	420	1100	nC
		T_J = 125 °C		-	1200	3200	
Peak rate of recovery current See fig. 8	$dI_{(rec)M}/dt$	T_J = 25 °C		-	370	-	A/μs
		T_J = 125 °C		-	270	-	

THERMAL - MECHANICAL SPECIFICATIONS					
PARAMETER		SYMBOL	TEST CONDITIONS	VALUES	UNITS
Maximum junction and storage temperature range		T_J, T_{Stg}		-55 to 150	°C
Maximum thermal resistance, junction to case		R_{thJC}	DC operation See fig. 4	0.38	°C/W
Typical thermal resistance, case to heatsink		R_{thCS}	Mounting surface, flat, smooth, and greased	0.05	
Approximate weight				30	g
				1.06	oz.
Mounting torque	minimum		Non-lubricated threads	3 (26.5)	N · m (lbf · in)
	maximum			4 (35.4)	
Terminal torque	minimum			3.4 (30)	
	maximum			5 (44.2)	
Case style			HALF-PAK (D-67)		

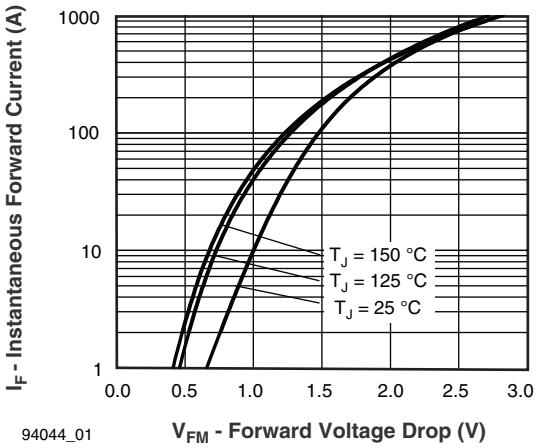

Fig. 1 - Maximum Forward Voltage Drop vs. Instantaneous Forward Current

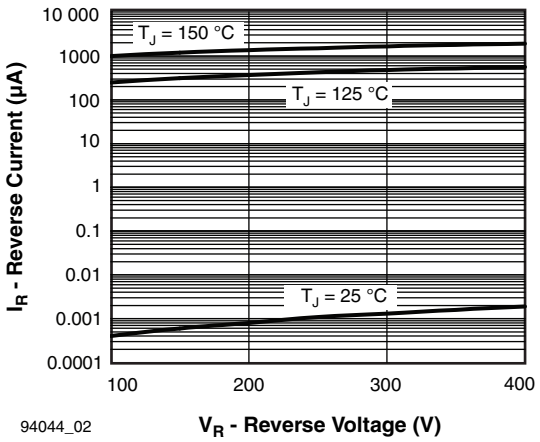

Fig. 2 - Typical Reverse Current vs. Reverse Voltage

For technical questions within your region: DiodesAmericas@vishay.com, DiodesAsia@vishay.com, DiodesEurope@vishay.com
THIS DOCUMENT IS SUBJECT TO CHANGE WITHOUT NOTICE. THE PRODUCTS DESCRIBED HEREIN AND THIS DOCUMENT ARE SUBJECT TO SPECIFIC DISCLAIMERS, SET FORTH AT www.vishay.com/doc?91000

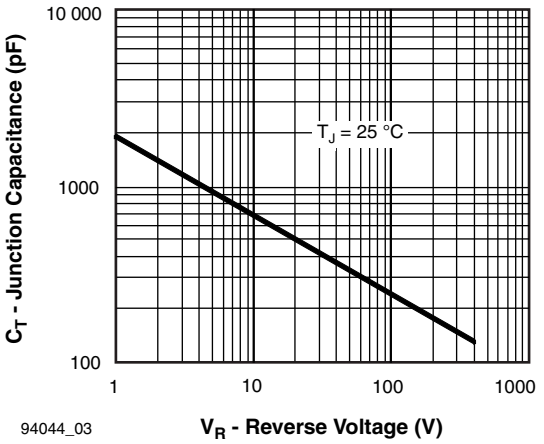

Fig. 3 - Typical Junction Capacitance vs. Reverse Voltage

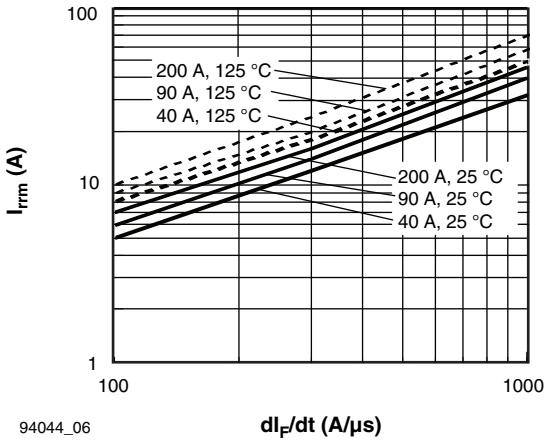

Fig. 6 - Typical Recovery Current vs. dI_F/dt

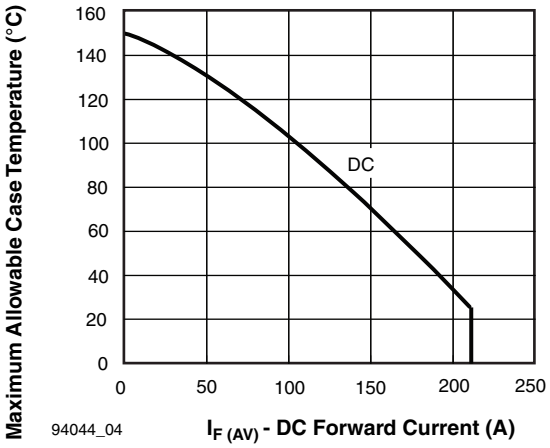

Fig. 4 - Maximum Allowable Case Temperature vs. DC Forward Current

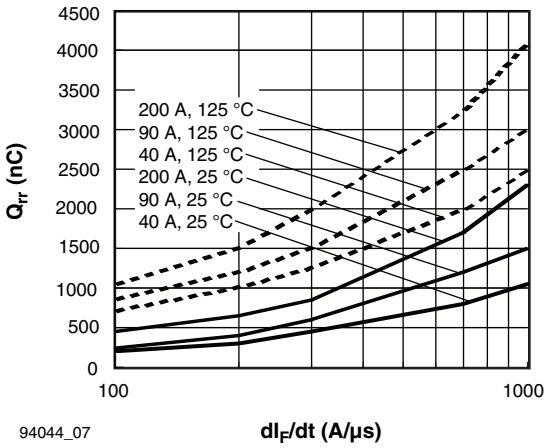

Fig. 7 - Typical Stored Charge vs. dI_F/dt

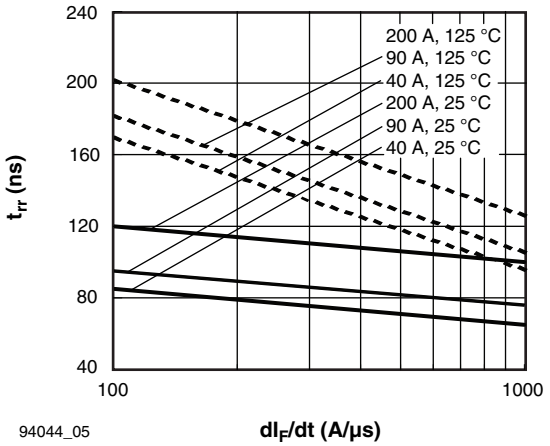

Fig. 5 - Typical Reverse Recovery Time vs. dI_F/dt

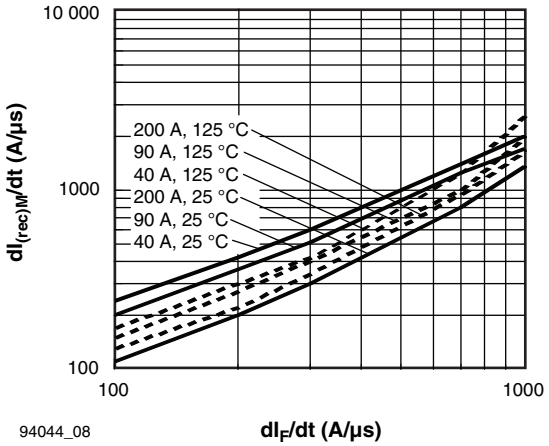

Fig. 8 - Typical $dI_{(rec)M}/dt$ vs. dI_F/dt

For technical questions within your region: DiodesAmericas@vishay.com, DiodesAsia@vishay.com, DiodesEurope@vishay.com
THIS DOCUMENT IS SUBJECT TO CHANGE WITHOUT NOTICE. THE PRODUCTS DESCRIBED HEREIN AND THIS DOCUMENT ARE SUBJECT TO SPECIFIC DISCLAIMERS, SET FORTH AT www.vishay.com/doc?91000

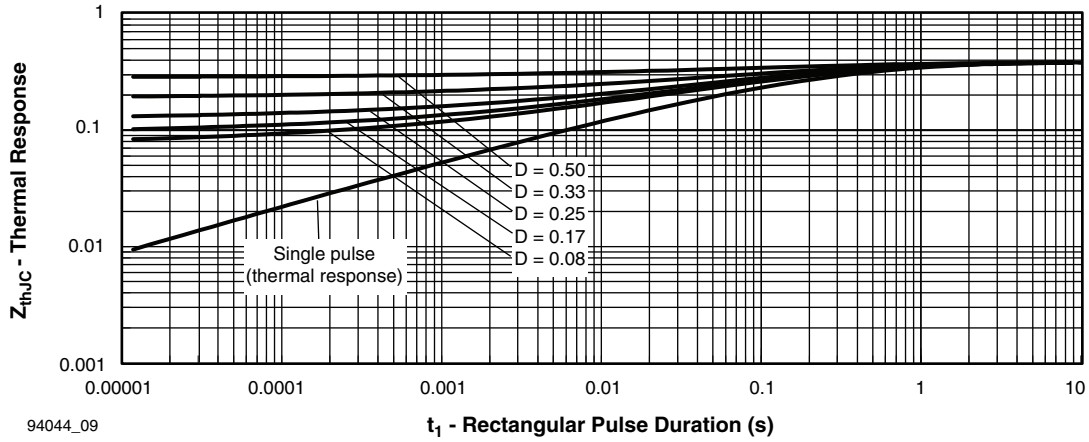

Fig. 9 - Maximum Thermal Impedance Z_{thJC} Characteristics (Per Leg)

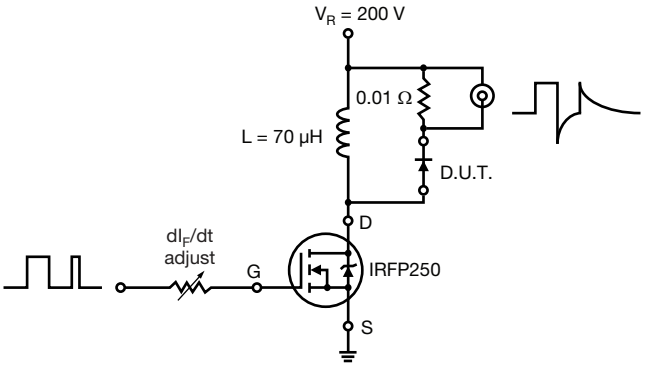

Fig. 10 - Reverse Recovery Parameter Test Circuit

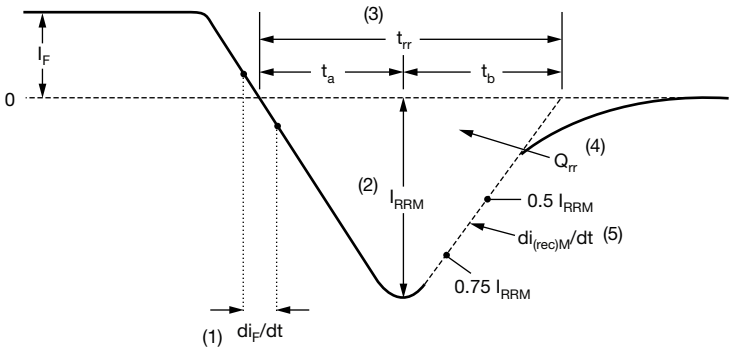

(1) di_F/dt - rate of change of current through zero crossing

(2) I_{RRM} - peak reverse recovery current

(3) t_{rr} - reverse recovery time measured from zero crossing point of negative going I_F to point where a line passing through 0.75 I_{RRM} and 0.50 I_{RRM} extrapolated to zero current.

(4) Q_{rr} - area under curve defined by t_{rr} and I_{RRM}

$$Q_{rr} = \frac{t_{rr} \times I_{RRM}}{2}$$

(5) $di_{(rec)M}/dt$ - peak rate of change of current during t_b portion of t_{rr}

Fig. 11 - Reverse Recovery Waveform and Definitions

For technical questions within your region: DiodesAmericas@vishay.com, DiodesAsia@vishay.com, DiodesEurope@vishay.com
THIS DOCUMENT IS SUBJECT TO CHANGE WITHOUT NOTICE. THE PRODUCTS DESCRIBED HEREIN AND THIS DOCUMENT ARE SUBJECT TO SPECIFIC DISCLAIMERS, SET FORTH AT www.vishay.com/doc?91000

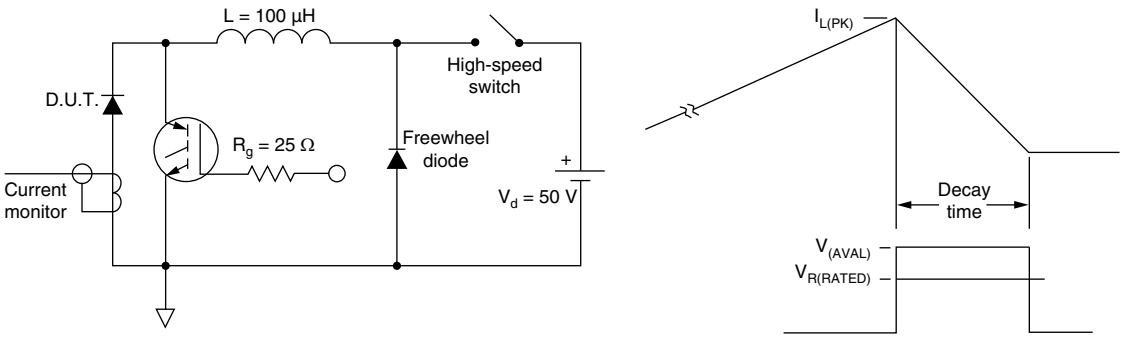

Fig. 12 - Avalanche Test Circuit and Waveforms

ORDERING INFORMATION TABLE

Device code	VS-	HFA	90	N	H	40	PbF
	1	2	3	4	5	6	7

1 - Vishay Semiconductors product
2 - HEXFRED® family
3 - Average current rating
4 - N = not isolated
5 - H = HALF-PAK (D-67)
6 - Voltage rating (400 V)
7 - Lead (Pb)-free

LINKS TO RELATED DOCUMENTS	
Dimensions	www.vishay.com/doc?95020

For technical questions within your region: DiodesAmericas@vishay.com, DiodesAsia@vishay.com, DiodesEurope@vishay.com
THIS DOCUMENT IS SUBJECT TO CHANGE WITHOUT NOTICE. THE PRODUCTS DESCRIBED HEREIN AND THIS DOCUMENT ARE SUBJECT TO SPECIFIC DISCLAIMERS, SET FORTH AT www.vishay.com/doc?91000

D-67 HALF-PAK

DIMENSIONS in millimeters (inches)

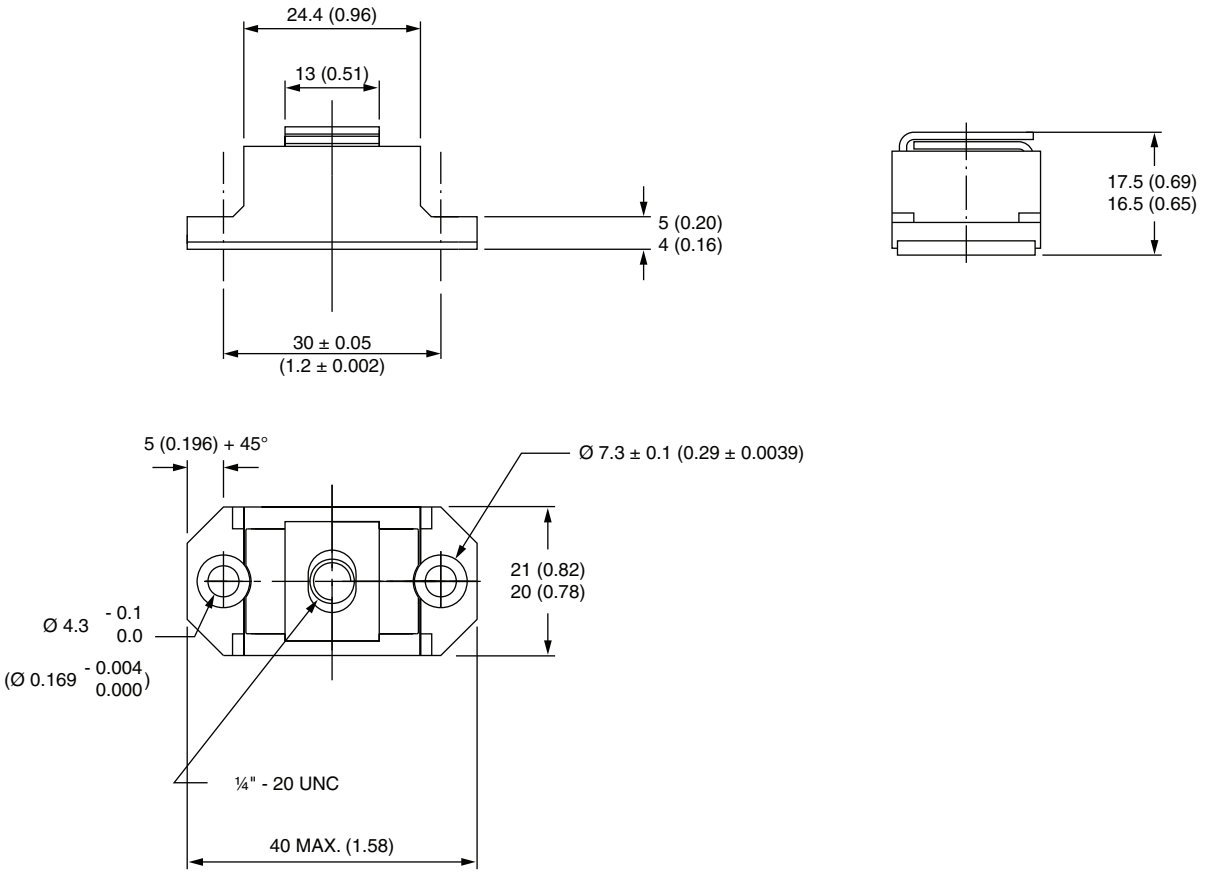

Disclaimer

ALL PRODUCT, PRODUCT SPECIFICATIONS AND DATA ARE SUBJECT TO CHANGE WITHOUT NOTICE TO IMPROVE RELIABILITY, FUNCTION OR DESIGN OR OTHERWISE.

Vishay Intertechnology, Inc., its affiliates, agents, and employees, and all persons acting on its or their behalf (collectively, “Vishay”), disclaim any and all liability for any errors, inaccuracies or incompleteness contained in any datasheet or in any other disclosure relating to any product.

Vishay makes no warranty, representation or guarantee regarding the suitability of the products for any particular purpose or the continuing production of any product. To the maximum extent permitted by applicable law, Vishay disclaims (i) any and all liability arising out of the application or use of any product, (ii) any and all liability, including without limitation special, consequential or incidental damages, and (iii) any and all implied warranties, including warranties of fitness for particular purpose, non-infringement and merchantability.

Statements regarding the suitability of products for certain types of applications are based on Vishay's knowledge of typical requirements that are often placed on Vishay products in generic applications. Such statements are not binding statements about the suitability of products for a particular application. It is the customer's responsibility to validate that a particular product with the properties described in the product specification is suitable for use in a particular application. Parameters provided in datasheets and / or specifications may vary in different applications and performance may vary over time. All operating parameters, including typical parameters, must be validated for each customer application by the customer's technical experts. Product specifications do not expand or otherwise modify Vishay's terms and conditions of purchase, including but not limited to the warranty expressed therein.

Hyperlinks included in this datasheet may direct users to third-party websites. These links are provided as a convenience and for informational purposes only. Inclusion of these hyperlinks does not constitute an endorsement or an approval by Vishay of any of the products, services or opinions of the corporation, organization or individual associated with the third-party website. Vishay disclaims any and all liability and bears no responsibility for the accuracy, legality or content of the third-party website or for that of subsequent links.

Except as expressly indicated in writing, Vishay products are not designed for use in medical, life-saving, or life-sustaining applications or for any other application in which the failure of the Vishay product could result in personal injury or death. Customers using or selling Vishay products not expressly indicated for use in such applications do so at their own risk. Please contact authorized Vishay personnel to obtain written terms and conditions regarding products designed for such applications.

No license, express or implied, by estoppel or otherwise, to any intellectual property rights is granted by this document or by any conduct of Vishay. Product names and markings noted herein may be trademarks of their respective owners.

© 2023 VISHAY INTERTECHNOLOGY, INC. ALL RIGHTS RESERVED