Not Insulated SOT-227 Power Module Ultrafast Rectifier, 250 A

SOT-227

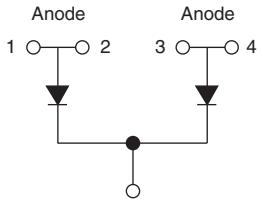

Base common cathode

FEATURES

- Not insulated package
- Ultrafast reverse recovery
- Ultrasoft reverse recovery current shape
- Optimized for power conversion: welding and industrial SMPS applications
- Plug-in compatible with other SOT-227 packages
- Easy to assemble
- Direct mounting to heatsink
- Designed and qualified for industrial level
- Material categorization: for definitions of compliance please see www.vishay.com/doc?99912

Pb-free
RoHS COMPLIANT

DESCRIPTION / APPLICATIONS

The VS-UFL250CB60 not insulated modules integrate two state of the art ultrafast recovery rectifiers in the compact, industry standard SOT-227 package. The planar structure of the diodes, and the platinum doping life time control, provide a ultrasoft recovery current shape, together with the best overall performance, ruggedness and reliability characteristics.

These devices are thus intended for high frequency applications in which the switching energy is designed not to be predominant portion of the total energy, such as in the output rectification stage of welding machines, SMPS, DC/DC converters. Their extremely optimized stored charge and low recovery current reduce both over dissipation in the switching elements (and snubbers) and EMI/RFI.

PRIMARY CHARACTERISTICS	
V_R	600 V
$I_{F(AV)}$ at T_C = 119 °C per module (1)	250 A
t_{rr}	44 ns
Type	Modules - Diode FRED Pt®
Package	SOT-227 not insulated

Note

(1) All 4 anode terminals connected

ABSOLUTE MAXIMUM RATINGS				
PARAMETER	SYMBOL	TEST CONDITIONS	MAX.	UNITS
Cathode to anode voltage	V_R		600	V
Continuous forward current per diode	I_F	T_C = 135 °C	130	A
Single pulse forward current per diode	I_{FSM} (1)	T_C = 25 °C	1500	
Maximum power dissipation per module	P_D	T_C = 135 °C	421	W
Operating junction and storage temperatures	T_J, T_{Stg}		-55 to +175	°C

Note

(1) 10 ms sine or 6 ms rectangular pulse

For technical questions within your region: DiodesAmericas@vishay.com, DiodesAsia@vishay.com, DiodesEurope@vishay.com
THIS DOCUMENT IS SUBJECT TO CHANGE WITHOUT NOTICE. THE PRODUCTS DESCRIBED HEREIN AND THIS DOCUMENT ARE SUBJECT TO SPECIFIC DISCLAIMERS, SET FORTH AT www.vishay.com/doc?91000

ELECTRICAL SPECIFICATIONS PER DIODE (T_J = 25 °C unless otherwise specified)						
PARAMETER	SYMBOL	TEST CONDITIONS	MIN.	TYP.	MAX.	UNITS
Cathode to anode breakdown voltage	V_{BR}	I_R = 100 μA	600	-	-	V
Forward voltage, per leg	V_{FM}	I_F = 100 A	-	1.28	1.44	
		I_F = 100 A, T_J = 125 °C	-	1.13	1.24	
		I_F = 100 A, T_J = 175 °C	-	1.03	-	
		I_F = 200 A	-	1.48	1.66	
		I_F = 200 A, T_J = 125 °C	-	1.37	1.55	
		I_F = 200 A, T_J = 175 °C	-	1.28	-	
Reverse leakage current, per leg	I_{RM}	V_R = V_R rated	-	0.1	50	μA
		V_R = V_R rated, T_J = 125 °C	-	100	-	
		V_R = V_R rated, T_J = 175 °C	-	0.25	2	mA
Junction capacitance, per leg	C_T	V_R = 600 V	-	72	-	pF

DYNAMIC RECOVERY CHARACTERISTICS PER DIODE (T_J = 25 °C unless otherwise specified)							
PARAMETER	SYMBOL	TEST CONDITIONS		MIN.	TYP.	MAX.	UNITS
Reverse recovery time, per leg	t_{rr}	I_F = 1.0 A, dI_F/dt = 400 A/μs, V_R = 30 V		-	44	-	ns
		T_J = 25 °C	I_F = 50 A dI_F/dt = 200 A/μs V_R = 200 V	-	104	-	
		T_J = 125 °C		-	210	-	
Peak recovery current, per leg	I_{RRM}	T_J = 25 °C		-	10	-	A
		T_J = 125 °C		-	22	-	
Reverse recovery charge, per leg	Q_{rr}	T_J = 25 °C		-	520	-	nC
		T_J = 125 °C		-	2200	-	

THERMAL - MECHANICAL SPECIFICATIONS						
PARAMETER	SYMBOL	TEST CONDITIONS	MIN.	TYP.	MAX.	UNITS
Junction to case, single leg conducting	R_{thJC}		-	-	0.19	°C/W
Junction to case, both leg conducting			-	-	0.095	
Case to heatsink, per module	R_{thCS}	Flat, greased surface	-	0.07	-	
Weight			-	30	-	g
Mounting torque		Torque to terminal	-	-	1.1 (9.7)	Nm (lbf.in)
		Torque to heatsink	-	-	1.8 (15.9)	Nm (lbf.in)
Case style			SOT-227 not insulated			

For technical questions within your region: DiodesAmericas@vishay.com, DiodesAsia@vishay.com, DiodesEurope@vishay.com
THIS DOCUMENT IS SUBJECT TO CHANGE WITHOUT NOTICE. THE PRODUCTS DESCRIBED HEREIN AND THIS DOCUMENT ARE SUBJECT TO SPECIFIC DISCLAIMERS, SET FORTH AT www.vishay.com/doc?91000

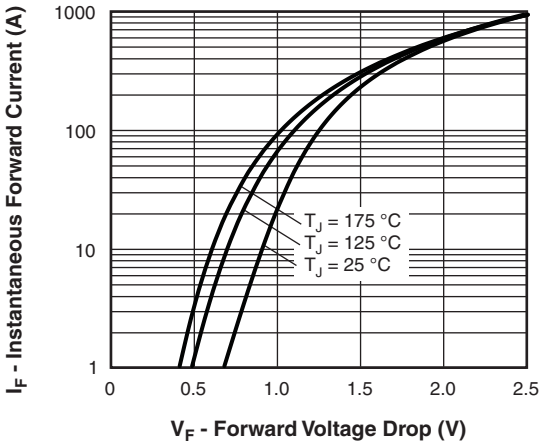

Fig. 1 - Typical Forward Voltage Drop Characteristics, Per Leg

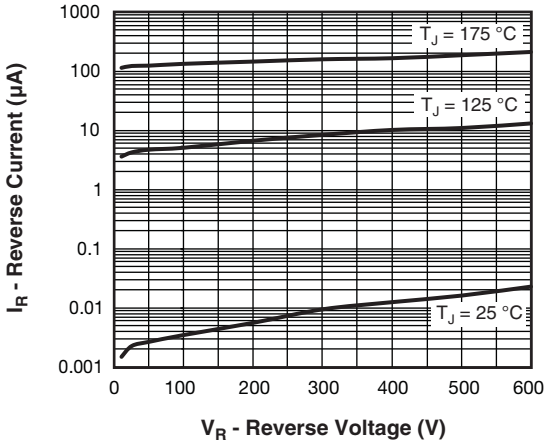

Fig. 2 - Typical Values of Reverse Current vs. Reverse Voltage, Per Leg

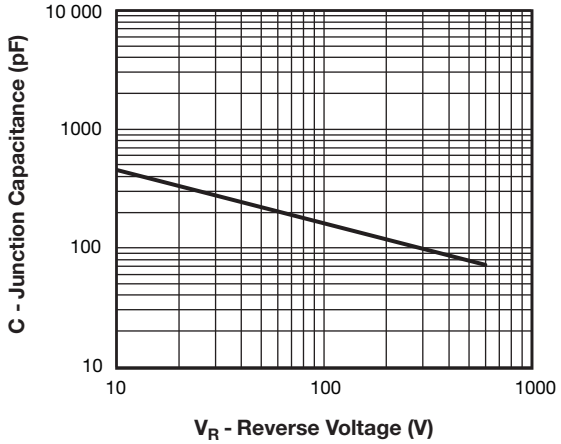

Fig. 3 - Typical Junction Capacitance vs. Reverse Voltage, Per Leg

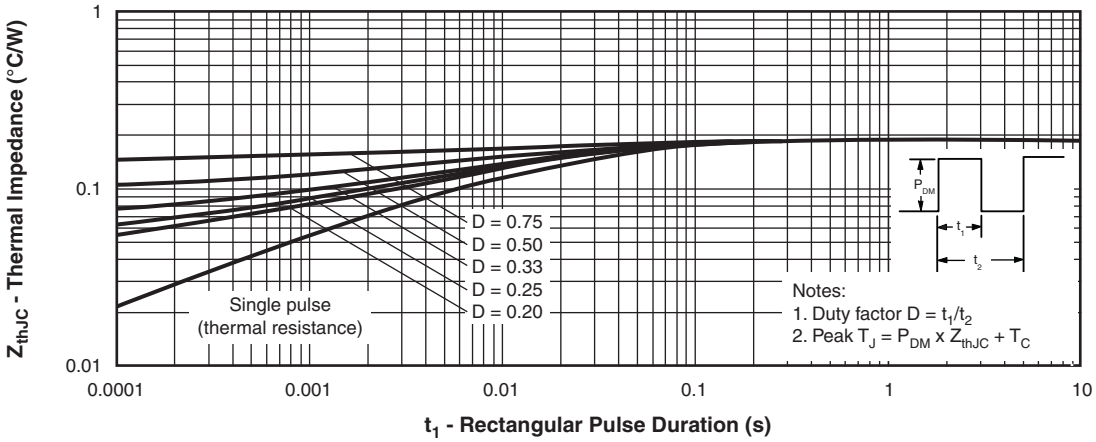

Fig. 4 - Maximum Thermal Impedance Z_{thJC} Characteristics, Per Leg

For technical questions within your region: DiodesAmericas@vishay.com, DiodesAsia@vishay.com, DiodesEurope@vishay.com
THIS DOCUMENT IS SUBJECT TO CHANGE WITHOUT NOTICE. THE PRODUCTS DESCRIBED HEREIN AND THIS DOCUMENT ARE SUBJECT TO SPECIFIC DISCLAIMERS, SET FORTH AT www.vishay.com/doc?91000

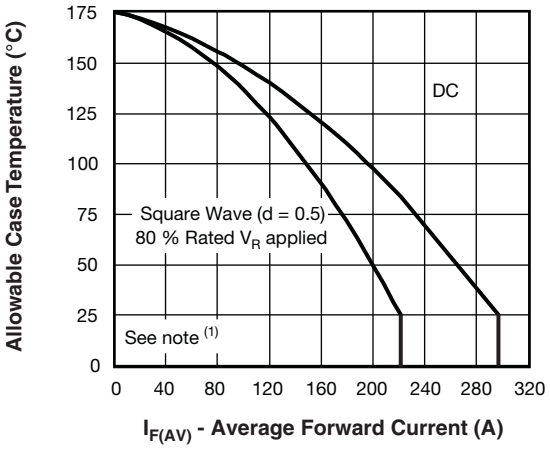

Fig. 5 - Maximum Allowable Case Temperature vs. Average Forward Current, Per Leg

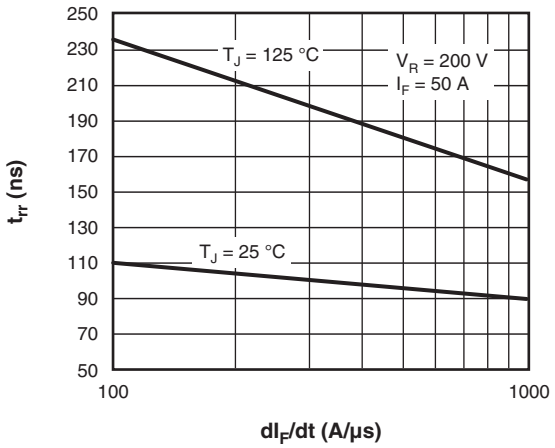

Fig. 7 - Typical Reverse Recovery Time vs. dI_F/dt, Per Leg

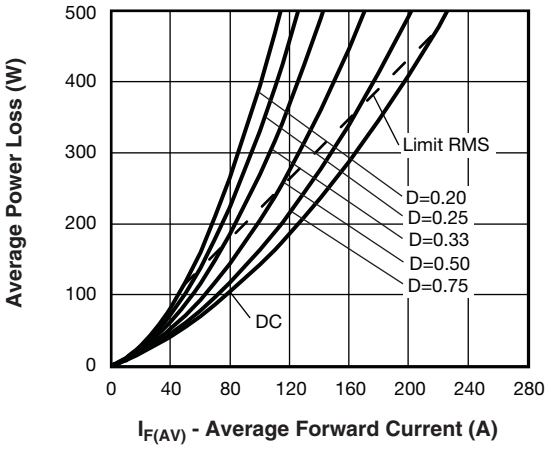

Fig. 6 - Forward Power Losses Characteristics, Per Leg

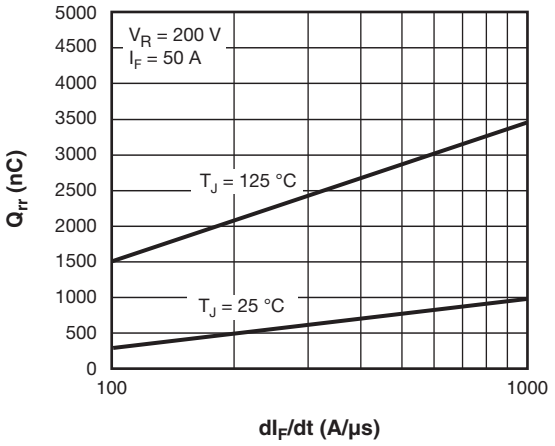

Fig. 8 - Typical Reverse Recovery Charge vs. dI_F/dt, Per Leg

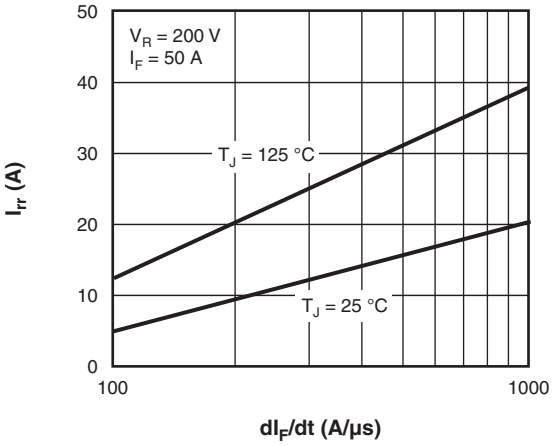

Fig. 9 - Typical Reverse Recovery Current vs. dI_F/dt, Per Leg

For technical questions within your region: DiodesAmericas@vishay.com, DiodesAsia@vishay.com, DiodesEurope@vishay.com
THIS DOCUMENT IS SUBJECT TO CHANGE WITHOUT NOTICE. THE PRODUCTS DESCRIBED HEREIN AND THIS DOCUMENT ARE SUBJECT TO SPECIFIC DISCLAIMERS, SET FORTH AT www.vishay.com/doc?91000

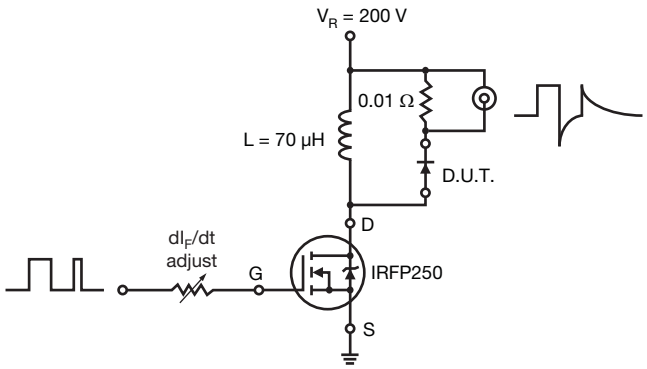

Fig. 10 - Reverse Recovery Parameter Test Circuit

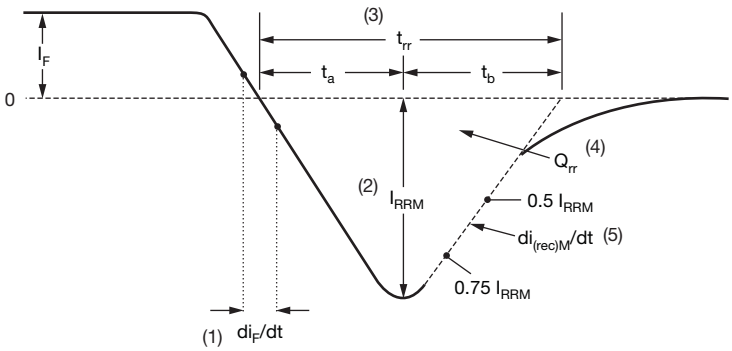

(1) di_F/dt - rate of change of current through zero crossing

(2) I_{RRM} - peak reverse recovery current

(3) t_{rr} - reverse recovery time measured from zero crossing point of negative going I_F to point where a line passing through 0.75 I_{RRM} and 0.50 I_{RRM} extrapolated to zero current.

(4) Q_{rr} - area under curve defined by t_{rr} and I_{RRM}

$$Q_{rr} = \frac{t_{rr} \times I_{RRM}}{2}$$

(5) $di_{(rec)M}/dt$ - peak rate of change of current during t_b portion of t_{rr}

Fig. 11 - Reverse Recovery Waveform and Definitions

For technical questions within your region: DiodesAmericas@vishay.com, DiodesAsia@vishay.com, DiodesEurope@vishay.com
THIS DOCUMENT IS SUBJECT TO CHANGE WITHOUT NOTICE. THE PRODUCTS DESCRIBED HEREIN AND THIS DOCUMENT ARE SUBJECT TO SPECIFIC DISCLAIMERS, SET FORTH AT www.vishay.com/doc?91000

ORDERING INFORMATION TABLE

Device code	VS-	UF	L	250	C	B	60
	1	2	3	4	5	6	7

1 - Vishay Semiconductors product
2 - Ultrafast rectifier
3 - Ultrafast Pt diffused, low V_F
4 - Current rating (250 = 250 A)
5 - Circuit configuration (two diodes common cathode)
6 - Package indicator (SOT-227 standard not insulated)
7 - Voltage rating (60 = 600 V)

Quantity per tube is 10 pcs, M4 screw and washer included

CIRCUIT CONFIGURATION		
CIRCUIT	**CIRCUIT CONFIGURATION CODE**	**CIRCUIT DRAWING**
Two diodes common cathode	C	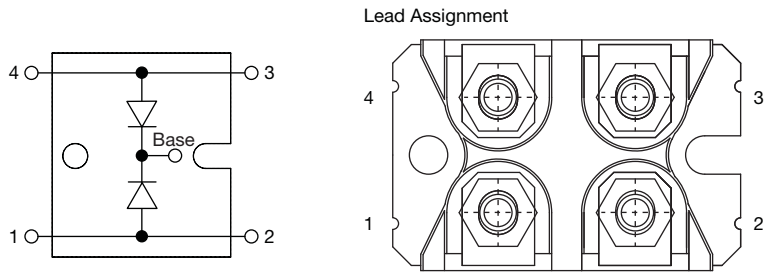

LINKS TO RELATED DOCUMENTS	
Dimensions	www.vishay.com/doc?95423
Part marking information	www.vishay.com/doc?95425

For technical questions within your region: DiodesAmericas@vishay.com, DiodesAsia@vishay.com, DiodesEurope@vishay.com
THIS DOCUMENT IS SUBJECT TO CHANGE WITHOUT NOTICE. THE PRODUCTS DESCRIBED HEREIN AND THIS DOCUMENT ARE SUBJECT TO SPECIFIC DISCLAIMERS, SET FORTH AT www.vishay.com/doc?91000

SOT-227 Generation 2

DIMENSIONS in millimeters (inches)

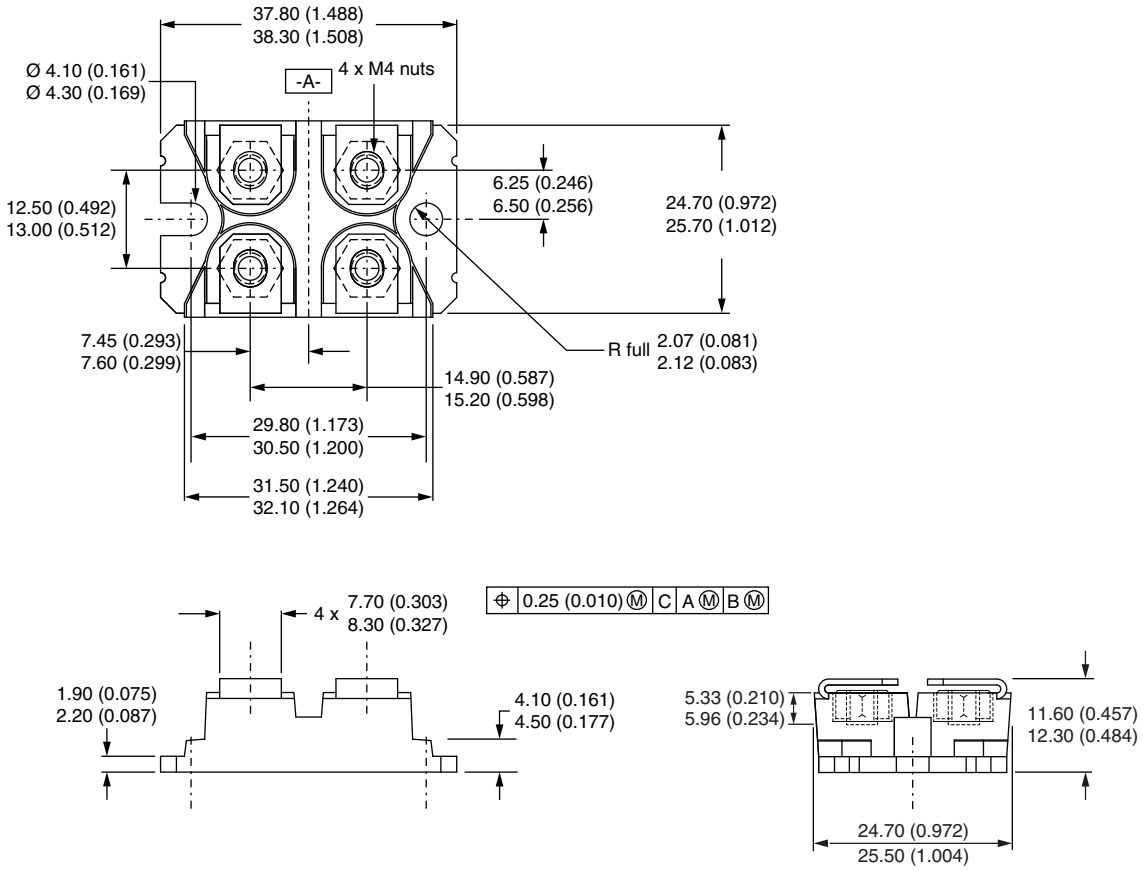

Note

- Controlling dimension: millimeter

For technical questions, contact: DiodesAmericas@vishay.com

THIS DOCUMENT IS SUBJECT TO CHANGE WITHOUT NOTICE. THE PRODUCTS DESCRIBED HEREIN AND THIS DOCUMENT ARE SUBJECT TO SPECIFIC DISCLAIMERS, SET FORTH AT www.vishay.com/doc?91000

Disclaimer

ALL PRODUCT, PRODUCT SPECIFICATIONS AND DATA ARE SUBJECT TO CHANGE WITHOUT NOTICE TO IMPROVE RELIABILITY, FUNCTION OR DESIGN OR OTHERWISE.

Vishay Intertechnology, Inc., its affiliates, agents, and employees, and all persons acting on its or their behalf (collectively, “Vishay”), disclaim any and all liability for any errors, inaccuracies or incompleteness contained in any datasheet or in any other disclosure relating to any product.

Vishay makes no warranty, representation or guarantee regarding the suitability of the products for any particular purpose or the continuing production of any product. To the maximum extent permitted by applicable law, Vishay disclaims (i) any and all liability arising out of the application or use of any product, (ii) any and all liability, including without limitation special, consequential or incidental damages, and (iii) any and all implied warranties, including warranties of fitness for particular purpose, non-infringement and merchantability.

Statements regarding the suitability of products for certain types of applications are based on Vishay's knowledge of typical requirements that are often placed on Vishay products in generic applications. Such statements are not binding statements about the suitability of products for a particular application. It is the customer's responsibility to validate that a particular product with the properties described in the product specification is suitable for use in a particular application. Parameters provided in datasheets and / or specifications may vary in different applications and performance may vary over time. All operating parameters, including typical parameters, must be validated for each customer application by the customer's technical experts. Product specifications do not expand or otherwise modify Vishay's terms and conditions of purchase, including but not limited to the warranty expressed therein.

Hyperlinks included in this datasheet may direct users to third-party websites. These links are provided as a convenience and for informational purposes only. Inclusion of these hyperlinks does not constitute an endorsement or an approval by Vishay of any of the products, services or opinions of the corporation, organization or individual associated with the third-party website. Vishay disclaims any and all liability and bears no responsibility for the accuracy, legality or content of the third-party website or for that of subsequent links.

Except as expressly indicated in writing, Vishay products are not designed for use in medical, life-saving, or life-sustaining applications or for any other application in which the failure of the Vishay product could result in personal injury or death. Customers using or selling Vishay products not expressly indicated for use in such applications do so at their own risk. Please contact authorized Vishay personnel to obtain written terms and conditions regarding products designed for such applications.

No license, express or implied, by estoppel or otherwise, to any intellectual property rights is granted by this document or by any conduct of Vishay. Product names and markings noted herein may be trademarks of their respective owners.

© 2023 VISHAY INTERTECHNOLOGY, INC. ALL RIGHTS RESERVED