Medium Power Phase Control Thyristors (Stud Version), 22 A

TO-48 (TO-208AA)

PRIMARY CHARACTERISTICS	
$I_{T(AV)}$	22 A
V_{DRM}/V_{RRM}	100 V, 200 V, 400 V, 600 V, 800 V, 1000 V, 1200 V
V_{TM}	1.70 V
I_{GT}	60 mA
T_J	-65 °C to +125 °C
Package	TO-48 (TO-208AA)
Circuit configuration	Single SCR

FEATURES

- Improved glass passivation for high reliability and exceptional stability at high temperature
- High dI/dt and dV/dt capabilities
- Standard package
- Low thermal resistance
- Metric threads version available
- Types up to 1200 V V_{DRM}/V_{RRM}
- Designed and qualified for industrial and consumer level
- Material categorization: for definitions of compliance please see www.vishay.com/doc?99912

RoHS COMPLIANT

TYPICAL APPLICATIONS

- Medium power switching
- Phase control applications

MAJOR RATINGS AND CHARACTERISTICS			
PARAMETER	TEST CONDITIONS	VALUES	UNITS
$I_{T(AV)}$		22	A
	T_C	85	°C
$I_{T(RMS)}$		35	A
I_{TSM}	50 Hz	400	A
	60 Hz	420	
I^2t	50 Hz	793	A^2s
	60 Hz	724	
V_{DRM}/V_{RRM}		100 to 1200	V
t_q	Typical	110	µs
T_J		-65 to +125	°C

ELECTRICAL SPECIFICATIONS

VOLTAGE RATINGS				
TYPE NUMBER	VOLTAGE CODE	V_{DRM}/V_{RRM}, MAXIMUM REPETITIVE PEAK AND OFF-STATE VOLTAGE (1) V	V_{RSM}, MAXIMUM NON-REPETITIVE PEAK VOLTAGE (2) V	I_{DRM}/I_{RRM} MAXIMUM AT $T_J = T_J$ MAXIMUM mA
VS-22RIA	10	100	150	20
	20	200	300	10
	40	400	500	
	60	600	700	
	80	800	900	
	100	1000	1100	
	120	1200	1300	

Notes

(1) Units may be broken over non-repetitively in the off-state direction without damage, if dI/dt does not exceed 20 A/µs

(2) For voltage pulses with $t_p \leq 5$ ms

For technical questions within your region: DiodesAmericas@vishay.com, DiodesAsia@vishay.com, DiodesEurope@vishay.com
THIS DOCUMENT IS SUBJECT TO CHANGE WITHOUT NOTICE. THE PRODUCTS DESCRIBED HEREIN AND THIS DOCUMENT ARE SUBJECT TO SPECIFIC DISCLAIMERS, SET FORTH AT www.vishay.com/doc?91000

ABSOLUTE MAXIMUM RATINGS						
PARAMETER	SYMBOL	TEST CONDITIONS			VALUES	UNITS
Maximum average on-state current at case temperature	$I_{T(AV)}$	180° sinusoidal conduction			22	A
					85	°C
Maximum RMS on-state current	$I_{T(RMS)}$				35	A
Maximum peak, one-cycle non-repetitive surge current	I_{TSM}	t = 10 ms	No voltage reapplied	Sinusoidal half wave, initial $T_J = T_J$ maximum	400	A
		t = 8.3 ms			420	
		t = 10 ms	100 % V_{RRM} reapplied		335	
		t = 8.3 ms			355	
Maximum I^2t for fusing	I^2t	t = 10 ms	No voltage reapplied		793	A^2s
		t = 8.3 ms			724	
		t = 10 ms	100 % V_{RRM} reapplied		560	
		t = 8.3 ms			515	
Maximum $I^2\sqrt{t}$ for fusing	$I^2\sqrt{t}$	t = 0.1 to 10 ms, no voltage reapplied, $T_J = T_J$ maximum			7930	$A^2\sqrt{s}$
Low level value of threshold voltage	$V_{T(TO)1}$	(16.7 % x π x $I_{T(AV)} < I < \pi$ x $I_{T(AV)}$), $T_J = T_J$ maximum			0.83	V
High level value of threshold voltage	$V_{T(TO)2}$	($I > \pi$ x $I_{T(AV)}$), $T_J = T_J$ maximum			0.95	
Low level value of on-state slope resistance	r_{t1}	(16.7 % x π x $I_{T(AV)} < I < \pi$ x $I_{T(AV)}$), $T_J = T_J$ maximum			14.9	mΩ
High level value of on-state slope resistance	r_{t2}	($I > \pi$ x $I_{T(AV)}$), $T_J = T_J$ maximum			13.4	
Maximum on-state voltage	V_{TM}	I_{pk} = 70 A, T_J = 25 °C			1.70	V
Maximum holding current	I_H	T_J = 25 °C, anode supply 6 V, resistive load			130	mA
Latching current	I_L				200	

SWITCHING					
PARAMETER		SYMBOL	TEST CONDITIONS	VALUES	UNITS
Maximum rate of rise of turned-on current	$V_{DRM} \leq 600$ V	dI/dt	$T_J = T_J$ maximum, V_{DM} = Rated V_{DRM} Gate pulse = 20 V, 15 Ω, t_p = 6 µs, t_r = 0.1 µs maximum I_{TM} = (2 x rated dI/dt) A	200	A/µs
	$V_{DRM} \leq 800$ V			180	
	$V_{DRM} \leq 1000$ V			160	
	$V_{DRM} \leq 1600$ V			150	
Typical turn-on time		t_{gt}	T_J = 25 °C, at rated V_{DRM}/V_{RRM}, T_J = 125 °C	0.9	µs
Typical reverse recovery time		t_{rr}	$T_J = T_J$ maximum, $I_{TM} = I_{T(AV)}$, t_p > 200 µs, dI/dt = - 10 A/µs	4	
Typical turn-off time		t_q	$T_J = T_J$ maximum, $I_{TM} = I_{T(AV)}$, t_p > 200 µs, V_R = 100 V, dI/dt = - 10 A/µs, dV/dt = 20 V/µs linear to 67 % V_{DRM}, gate bias 0 V to 100 W	110	

Note

- t_q = 10 µs up to 600 V, t_q = 30 µs up to 1600 V available on special request

BLOCKING				
PARAMETER	SYMBOL	TEST CONDITIONS	VALUES	UNITS
Maximum critical rate of rise of off-state voltage	dV/dt	$T_J = T_J$ maximum linear to 100 % rated V_{DRM}	100	V/µs
		$T_J = T_J$ maximum linear to 67 % rated V_{DRM}	300 (1)	

Note

(1) Available with: dV/dt = 1000 V/µs, to complete code add S90 i.e. 22RIA120S90

For technical questions within your region: DiodesAmericas@vishay.com, DiodesAsia@vishay.com, DiodesEurope@vishay.com
THIS DOCUMENT IS SUBJECT TO CHANGE WITHOUT NOTICE. THE PRODUCTS DESCRIBED HEREIN AND THIS DOCUMENT ARE SUBJECT TO SPECIFIC DISCLAIMERS, SET FORTH AT www.vishay.com/doc?91000

TRIGGERING					
PARAMETER	**SYMBOL**	**TEST CONDITIONS**		**VALUES**	**UNITS**
Maximum peak gate power	P_{GM}	$T_J = T_J$ maximum		8.0	W
Maximum average gate power	$P_{G(AV)}$			2.0	
Maximum peak positive gate current	I_{GM}	$T_J = T_J$ maximum		1.5	A
Maximum peak negative gate voltage	$-V_{GM}$	$T_J = T_J$ maximum		10	V
DC gate current required to trigger	I_{GT}	T_J = - 65 °C	Maximum required gate trigger current/voltage are the lowest value which will trigger all units 6 V anode to cathode applied	90	mA
		T_J = 25 °C		60	
		T_J = 125 °C		35	
DC gate voltage required to trigger	V_{GT}	T_J = - 65 °C		3.0	V
		T_J = 25 °C		2.0	
		T_J = 125 °C		1.0	
DC gate current not to trigger	I_{GD}	$T_J = T_J$ maximum, V_{DRM} = Rated value		2.0	mA
DC gate voltage not to trigger	V_{GD}	$T_J = T_J$ maximum, V_{DRM} = Rated value	Maximum gate current/voltage not to trigger is the maximum value which will not trigger any unit with rated V_{DRM} anode to cathode applied	0.2	V

THERMAL AND MECHANICAL SPECIFICATIONS					
PARAMETER	**SYMBOL**	**TEST CONDITIONS**	**VALUES**		**UNITS**
Maximum operating junction and storage temperature range	T_J, T_{Stg}		-65 to +125		°C
Maximum thermal resistance, junction to case	R_{thJC}	DC operation	0.86		K/W
Maximum thermal resistance, case to heat sink	R_{thCS}	Mounting surface, smooth, flat and greased	0.35		
			TO NUT	**TO DEVICE**	
Mounting torque		Lubricated threads (Non-lubricated threads)	20 (27.5)	25	lbf · in
			0.23 (0.32)	0.29	kgf · m
			2.3 (3.1)	2.8	N · m
Approximate weight			14		g
			0.49		oz.
Case style		See dimensions - link at the end of datasheet	TO-48 (TO-208AA)		

ΔR_{thJC} CONDUCTION				
CONDUCTION ANGLE	**SINUSOIDAL CONDUCTION**	**RECTANGULAR CONDUCTION**	**TEST CONDITIONS**	**UNITS**
180°	0.21	0.15	$T_J = T_J$ maximum	K/W
120°	0.25	0.25		
90°	0.31	0.34		
60°	0.45	0.47		
30°	0.76	0.76		

Note

- The table above shows the increment of thermal resistance R_{thJC} when devices operate at different conduction angles than DC

For technical questions within your region: DiodesAmericas@vishay.com, DiodesAsia@vishay.com, DiodesEurope@vishay.com
THIS DOCUMENT IS SUBJECT TO CHANGE WITHOUT NOTICE. THE PRODUCTS DESCRIBED HEREIN AND THIS DOCUMENT ARE SUBJECT TO SPECIFIC DISCLAIMERS, SET FORTH AT www.vishay.com/doc?91000

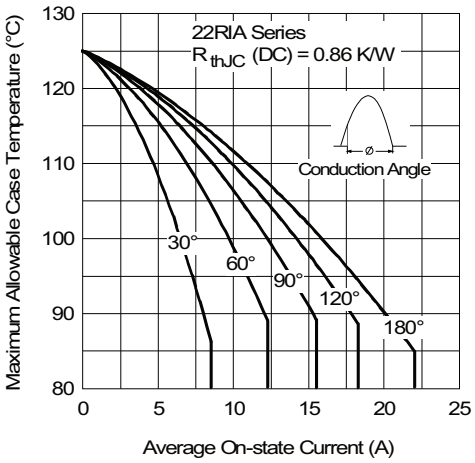

Fig. 1 - Current Ratings Characteristics

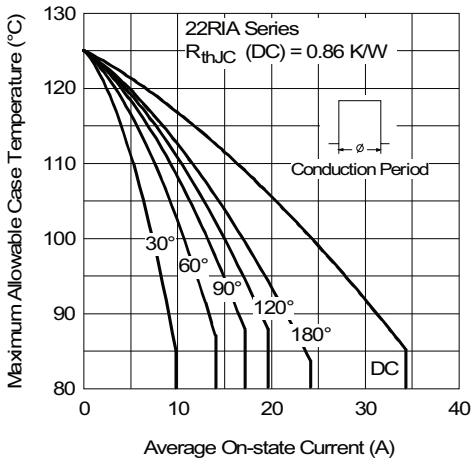

Fig. 1 - Current Ratings Characteristics

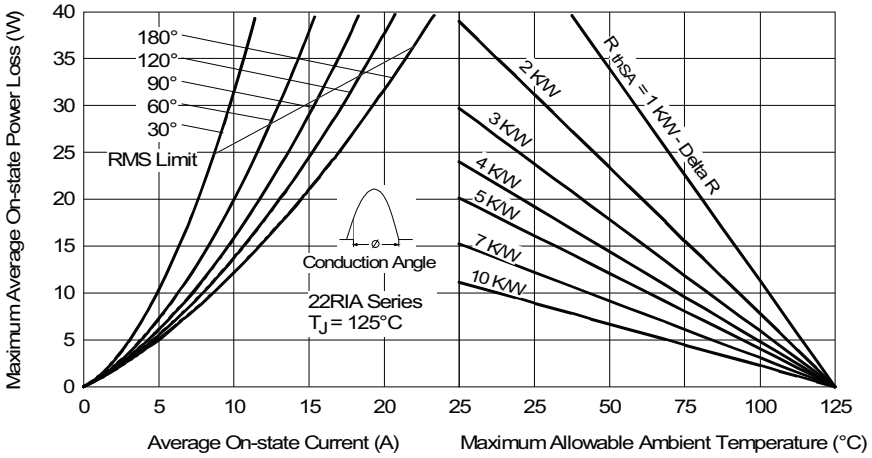

Fig. 2 - On-State Power Loss Characteristics

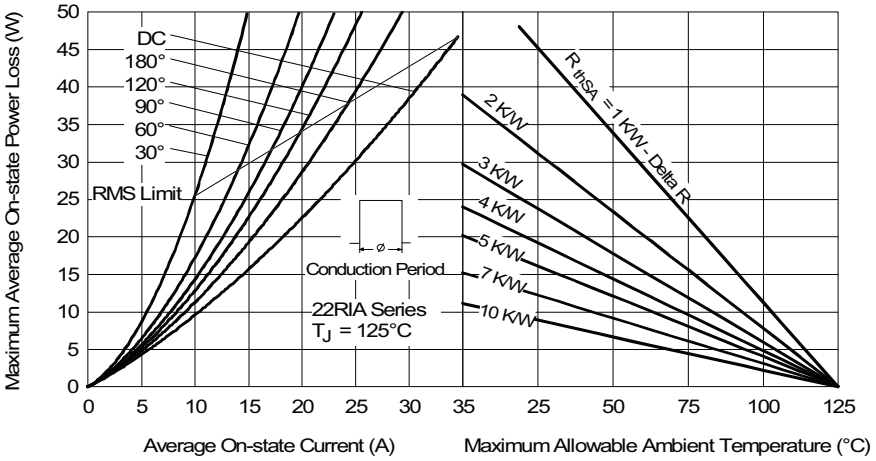

Fig. 3 - On-State Power Loss Characteristics

For technical questions within your region: DiodesAmericas@vishay.com, DiodesAsia@vishay.com, DiodesEurope@vishay.com
THIS DOCUMENT IS SUBJECT TO CHANGE WITHOUT NOTICE. THE PRODUCTS DESCRIBED HEREIN AND THIS DOCUMENT ARE SUBJECT TO SPECIFIC DISCLAIMERS, SET FORTH AT www.vishay.com/doc?91000

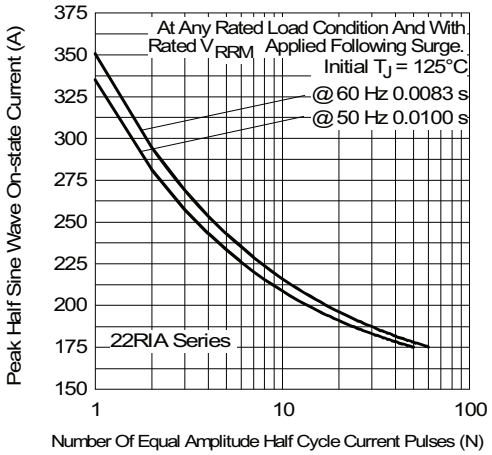

Fig. 4 - Maximum Non-Repetitive Surge Current

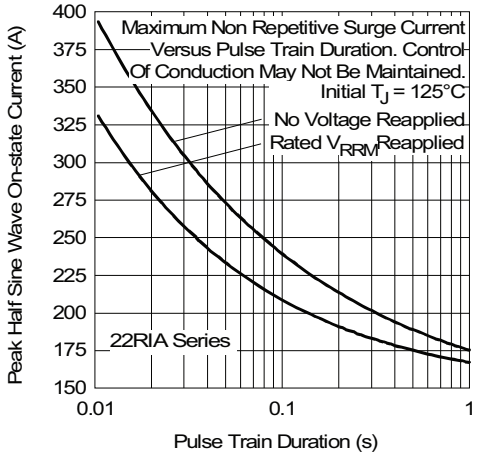

Fig. 5 - Maximum Non-Repetitive Surge Current

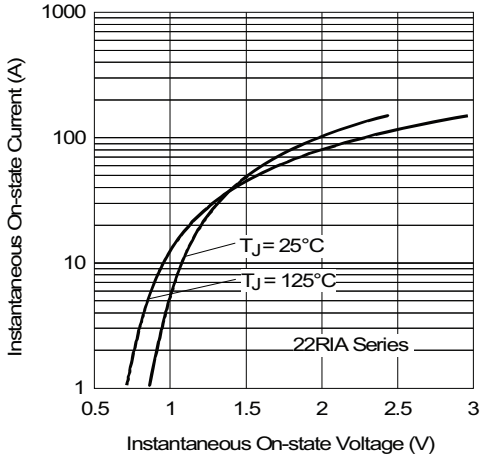

Fig. 6 - Forward Voltage Drop Characteristics

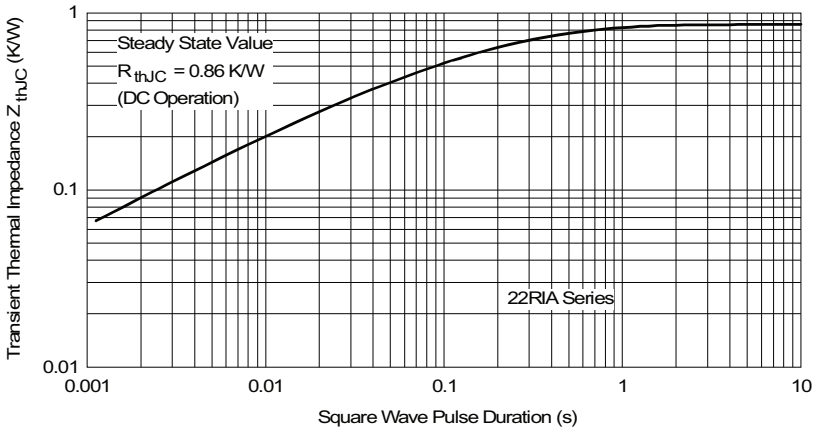

Fig. 7 - Thermal Impedance Z_{thJC} Characteristics

For technical questions within your region: DiodesAmericas@vishay.com, DiodesAsia@vishay.com, DiodesEurope@vishay.com
THIS DOCUMENT IS SUBJECT TO CHANGE WITHOUT NOTICE. THE PRODUCTS DESCRIBED HEREIN AND THIS DOCUMENT ARE SUBJECT TO SPECIFIC DISCLAIMERS, SET FORTH AT www.vishay.com/doc?91000

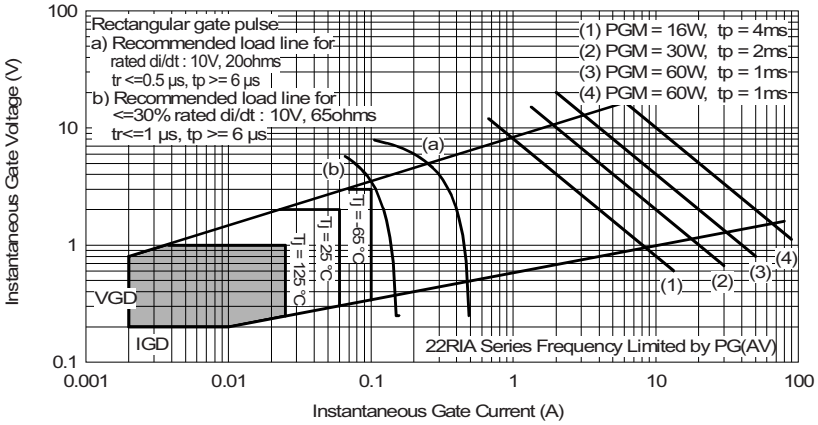

Fig. 8 - Gate Characteristics

ORDERING INFORMATION TABLE

Device code

VS-	22	RIA	120	M	S90
1	2	3	4	5	6

1 - Vishay Semiconductors product

2 - Current code

3 - Essential part number

4 - Voltage code x 10 = V_{RRM} (see Voltage Ratings table)

5 - None = stud base TO-48 (TO-208AA) 1/4" 28UNF-2A
M = stud base TO-48 (TO-208AA) M6 x 1

6 - Critical dV/dt:
None = 300 V/µs (standard value)
S90 = 1000 V/µs (special selection)

LINKS TO RELATED DOCUMENTS	
Dimensions	www.vishay.com/doc?95333

For technical questions within your region: DiodesAmericas@vishay.com, DiodesAsia@vishay.com, DiodesEurope@vishay.com
THIS DOCUMENT IS SUBJECT TO CHANGE WITHOUT NOTICE. THE PRODUCTS DESCRIBED HEREIN AND THIS DOCUMENT ARE SUBJECT TO SPECIFIC DISCLAIMERS, SET FORTH AT www.vishay.com/doc?91000

TO-208AA (TO-48)

DIMENSIONS in millimeters (inches)

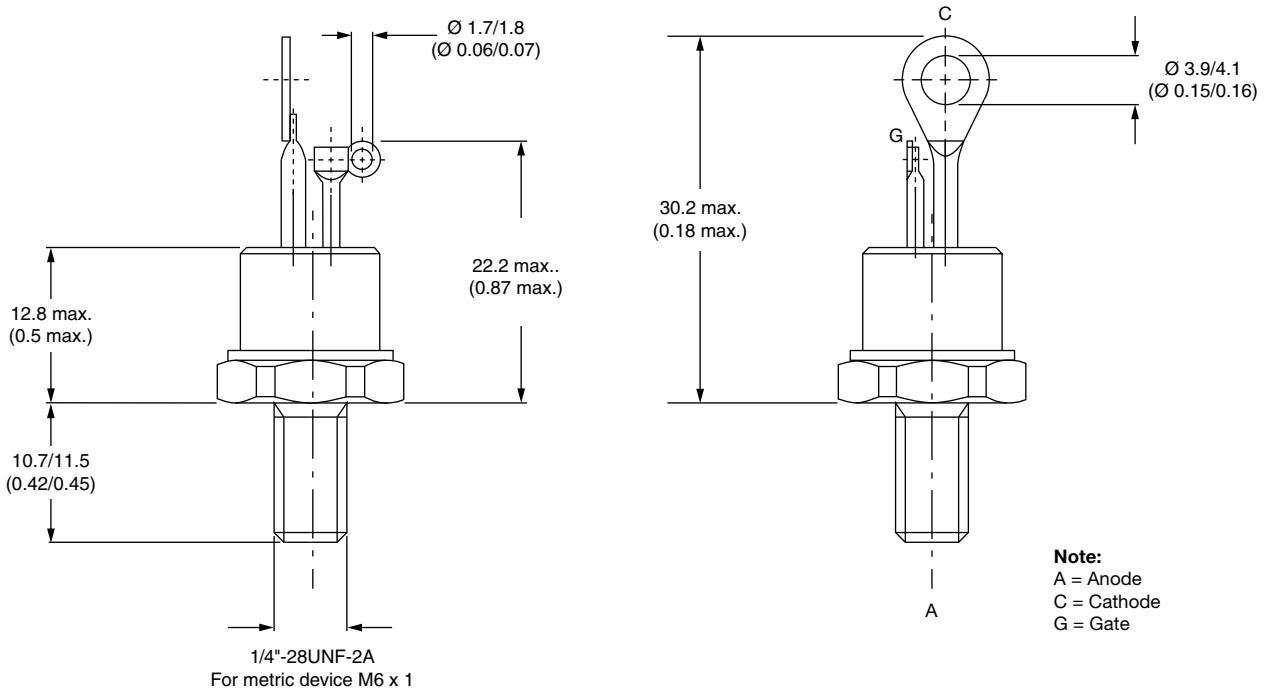

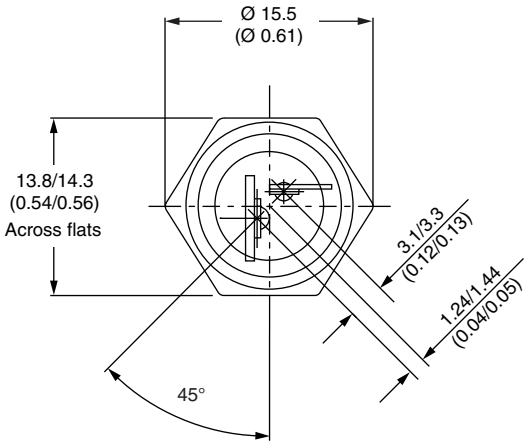

For technical questions within your region: DiodesAmericas@vishay.com, DiodesAsia@vishay.com, DiodesEurope@vishay.com

THIS DOCUMENT IS SUBJECT TO CHANGE WITHOUT NOTICE. THE PRODUCTS DESCRIBED HEREIN AND THIS DOCUMENT ARE SUBJECT TO SPECIFIC DISCLAIMERS, SET FORTH AT www.vishay.com/doc?91000

Disclaimer

ALL PRODUCT, PRODUCT SPECIFICATIONS AND DATA ARE SUBJECT TO CHANGE WITHOUT NOTICE TO IMPROVE RELIABILITY, FUNCTION OR DESIGN OR OTHERWISE.

Vishay Intertechnology, Inc., its affiliates, agents, and employees, and all persons acting on its or their behalf (collectively, “Vishay”), disclaim any and all liability for any errors, inaccuracies or incompleteness contained in any datasheet or in any other disclosure relating to any product.

Vishay makes no warranty, representation or guarantee regarding the suitability of the products for any particular purpose or the continuing production of any product. To the maximum extent permitted by applicable law, Vishay disclaims (i) any and all liability arising out of the application or use of any product, (ii) any and all liability, including without limitation special, consequential or incidental damages, and (iii) any and all implied warranties, including warranties of fitness for particular purpose, non-infringement and merchantability.

Statements regarding the suitability of products for certain types of applications are based on Vishay's knowledge of typical requirements that are often placed on Vishay products in generic applications. Such statements are not binding statements about the suitability of products for a particular application. It is the customer's responsibility to validate that a particular product with the properties described in the product specification is suitable for use in a particular application. Parameters provided in datasheets and / or specifications may vary in different applications and performance may vary over time. All operating parameters, including typical parameters, must be validated for each customer application by the customer's technical experts. Product specifications do not expand or otherwise modify Vishay's terms and conditions of purchase, including but not limited to the warranty expressed therein.

Hyperlinks included in this datasheet may direct users to third-party websites. These links are provided as a convenience and for informational purposes only. Inclusion of these hyperlinks does not constitute an endorsement or an approval by Vishay of any of the products, services or opinions of the corporation, organization or individual associated with the third-party website. Vishay disclaims any and all liability and bears no responsibility for the accuracy, legality or content of the third-party website or for that of subsequent links.

Except as expressly indicated in writing, Vishay products are not designed for use in medical, life-saving, or life-sustaining applications or for any other application in which the failure of the Vishay product could result in personal injury or death. Customers using or selling Vishay products not expressly indicated for use in such applications do so at their own risk. Please contact authorized Vishay personnel to obtain written terms and conditions regarding products designed for such applications.

No license, express or implied, by estoppel or otherwise, to any intellectual property rights is granted by this document or by any conduct of Vishay. Product names and markings noted herein may be trademarks of their respective owners.

© 2023 VISHAY INTERTECHNOLOGY, INC. ALL RIGHTS RESERVED