# Medium Power Phase Control Thyristors (Stud Version), 10 A

TO-48 (TO-208AA)

| PRIMARY CHARACTERISTICS | |
|---|---|
| $I_{T(AV)}$ | 10 A |
| $V_{DRM}/V_{RRM}$ | 100 V, 200 V, 400 V, 600 V, 800 V, 1000 V, 1200 V |
| $V_{TM}$ | 1.75 V |
| $I_{GT}$ | 60 mA |
| $T_J$ | -65 °C to +125 °C |
| Package | TO-48 (TO-208AA) |
| Circuit configuration | Single SCR |

## FEATURES

- Improved glass passivation for high reliability and exceptional stability at high temperature
- High $dI_F/dt$ and dV/dt capabilities
- Standard package
- Low thermal resistance
- Metric threads version available
- Types up to 1200 V $V_{DRM}/V_{RRM}$
- Designed and qualified for industrial and consumer level
- Material categorization: for definitions of compliance please see www.vishay.com/doc?99912

RoHS COMPLIANT

## TYPICAL APPLICATIONS

- Medium power switching
- Phase control applications

| MAJOR RATINGS AND CHARACTERISTICS | | | |
|---|---|---|---|
| PARAMETER | TEST CONDITIONS | VALUES | UNITS |
| $I_{T(AV)}$ | | 10 | A |
| | $T_C$ | 85 | °C |
| $I_{T(RMS)}$ | | 25 | A |
| $I_{TSM}$ | 50 Hz | 225 | A |
| | 60 Hz | 240 | |
| $I^2t$ | 50 Hz | 255 | $A^2s$ |
| | 60 Hz | 233 | |
| $V_{DRM}/V_{RRM}$ | | 100 to 1200 | V |
| $t_q$ | Typical | 110 | µs |
| $T_J$ | | -65 to +125 | °C |

## ELECTRICAL SPECIFICATIONS

| VOLTAGE RATINGS | | | | |
|---|---|---|---|---|
| TYPE NUMBER | VOLTAGE CODE | $V_{DRM}/V_{RRM}$, MAXIMUM REPETITIVE PEAK AND OFF-STATE VOLTAGE [1] V | $V_{RSM}$, MAXIMUM NON-REPETITIVE PEAK VOLTAGE [2] V | $I_{DRM}/I_{RRM}$ MAXIMUM AT $T_J = T_J$ MAXIMUM mA |
| VS-10RIA | 10 | 100 | 150 | 20 |
| | 20 | 200 | 300 | 10 |
| | 40 | 400 | 500 | |
| | 60 | 600 | 700 | |
| | 80 | 800 | 900 | |
| | 100 | 1000 | 1100 | |
| | 120 | 1200 | 1300 | |

**Notes**

(1) Units may be broken over non-repetitively in the off-state direction without damage, if dI/dt does not exceed 20 A/µs

(2) For voltage pulses with $t_p \leq 5$ ms



For technical questions within your region: DiodesAmericas@vishay.com, DiodesAsia@vishay.com, DiodesEurope@vishay.com
THIS DOCUMENT IS SUBJECT TO CHANGE WITHOUT NOTICE. THE PRODUCTS DESCRIBED HEREIN AND THIS DOCUMENT ARE SUBJECT TO SPECIFIC DISCLAIMERS, SET FORTH AT www.vishay.com/doc?91000

| ABSOLUTE MAXIMUM RATINGS | | | | | | |
|---|---|---|---|---|---|---|
| PARAMETER | SYMBOL | TEST CONDITIONS | | | VALUES | UNITS |
| Maximum average on-state current at case temperature | $I_{T(AV)}$ | 180° conduction, half sine wave | | | 10 | A |
| | | | | | 85 | °C |
| Maximum RMS on-state current | $I_{T(RMS)}$ | | | | 25 | A |
| Maximum peak, one-cycle non-repetitive surge current | $I_{TSM}$ | t = 10 ms | No voltage reapplied | Sinusoidal half wave, initial $T_J = T_J$ maximum | 225 | A |
| | | t = 8.3 ms | | | 240 | |
| | | t = 10 ms | 100 % $V_{RRM}$ reapplied | | 190 | |
| | | t = 8.3 ms | | | 200 | |
| Maximum $I^2t$ for fusing | $I^2t$ | t = 10 ms | No voltage reapplied | | 255 | $A^2s$ |
| | | t = 8.3 ms | | | 233 | |
| | | t = 10 ms | 100 % $V_{RRM}$ reapplied | | 180 | |
| | | t = 8.3 ms | | | 165 | |
| Maximum $I^2\sqrt{t}$ for fusing | $I^2\sqrt{t}$ | t = 0.1 to 10 ms, no voltage reapplied | | | 2550 | $A^2\sqrt{s}$ |
| Low level value of threshold voltage | $V_{T(TO)1}$ | (16.7 % x $\pi$ x $I_{T(AV)}$ < I < $\pi$ x $I_{T(AV)}$), $T_J = T_J$ maximum | | | 1.10 | V |
| High level value of threshold voltage | $V_{T(TO)2}$ | (I > $\pi$ x $I_{T(AV)}$), $T_J = T_J$ maximum | | | 1.39 | |
| Low level value of on-state slope resistance | $r_{t1}$ | (16.7 % x $\pi$ x $I_{T(AV)}$ < I < $\pi$ x $I_{T(AV)}$), $T_J = T_J$ maximum | | | 24.3 | mΩ |
| High level value of on-state slope resistance | $r_{t2}$ | (I > $\pi$ x $I_{T(AV)}$), $T_J = T_J$ maximum | | | 16.7 | |
| Maximum on-state voltage | $V_{TM}$ | $I_{pk}$ = 32 A, $T_J$ = 25 °C, $t_p$ = 10 ms sine pulse | | | 1.75 | V |
| Maximum holding current | $I_H$ | $T_J$ = 25 °C, anode supply 12 V resistive load | | | 130 | mA |
| Typical latching current | $I_L$ | | | | 200 | |

| SWITCHING | | | | | |
|---|---|---|---|---|---|
| PARAMETER | | SYMBOL | TEST CONDITIONS | VALUES | UNITS |
| Maximum rate of rise of turned-on current | $V_{DRM} \leq 600$ V | $dI_F/dt$ | $T_J = T_J$ maximum, $V_{DM}$ = Rated $V_{DRM}$<br>Gate pulse = 20 V, 15 Ω, $t_p$ = 6 µs, $t_r$ = 0.1 µs maximum<br>$I_{TM}$ = (2 x rated dI/dt) A | 200 | A/µs |
| | $V_{DRM} \leq 800$ V | | | 180 | |
| | $V_{DRM} \leq 1000$ V | | | 160 | |
| | $V_{DRM} \leq 1600$ V | | | 150 | |
| Typical turn-on time | | $t_{gt}$ | $T_J$ = 25 °C, at rated $V_{DRM}/V_{RRM}$, $T_J$ = 125 °C | 0.9 | µs |
| Typical reverse recovery time | | $t_{rr}$ | $T_J = T_J$ maximum,<br>$I_{TM} = I_{T(AV)}$, $t_p$ > 200 µs, $dI_F/dt$ = - 10 A/µs | 4 | |
| Typical turn-off time | | $t_q$ | $T_J = T_J$ maximum, $I_{TM} = I_{T(AV)}$, $t_p$ > 200 µs, $V_R$ = 100 V,<br>$dI_F/dt$ = - 10 A/µs, dV/dt = 20 V/µs linear to 67 % $V_{DRM}$,<br>gate bias 0 V to 100 W | 110 | |

**Note**

- $t_q$ = 10 µs up to 600 V, $t_q$ = 30 µs up to 1600 V available on special request

| BLOCKING | | | | |
|---|---|---|---|---|
| PARAMETER | SYMBOL | TEST CONDITIONS | VALUES | UNITS |
| Maximum critical rate of rise of off-state voltage | dV/dt | $T_J = T_J$ maximum linear to 100 % rated $V_{DRM}$ | 100 | V/µs |
| | | $T_J = T_J$ maximum linear to 67 % rated $V_{DRM}$ | 300 (1) | |

**Note**

(1) Available with: dV/dt = 1000 V/µs, to complete code add S90 i.e. 10RIA120S90


For technical questions within your region: DiodesAmericas@vishay.com, DiodesAsia@vishay.com, DiodesEurope@vishay.com
THIS DOCUMENT IS SUBJECT TO CHANGE WITHOUT NOTICE. THE PRODUCTS DESCRIBED HEREIN AND THIS DOCUMENT ARE SUBJECT TO SPECIFIC DISCLAIMERS, SET FORTH AT www.vishay.com/doc?91000

| TRIGGERING | | | | | |
|---|---|---|---|---|---|
| PARAMETER | SYMBOL | TEST CONDITIONS | | VALUES | UNITS |
| Maximum peak gate power | $P_{GM}$ | $T_J = T_J$ maximum | | 8.0 | W |
| Maximum average gate power | $P_{G(AV)}$ | | | 2.0 | |
| Maximum peak positive gate current | $I_{GM}$ | $T_J = T_J$ maximum | | 1.5 | A |
| Maximum peak negative gate voltage | $-V_{GM}$ | $T_J = T_J$ maximum | | 10 | V |
| DC gate current required to trigger | $I_{GT}$ | $T_J$ = -65 °C | Maximum required gate trigger current/voltage are the lowest value which will trigger all units 6 V anode to cathode applied | 90 | mA |
| | | $T_J$ = 25 °C | | 60 | |
| | | $T_J$ = 125 °C | | 35 | |
| DC gate voltage required to trigger | $V_{GT}$ | $T_J$ = -65 °C | | 3.0 | V |
| | | $T_J$ = 25 °C | | 2.0 | |
| | | $T_J$ = 125 °C | | 1.0 | |
| DC gate current not to trigger | $I_{GD}$ | $T_J = T_J$ maximum, $V_{DRM}$ = Rated value | | 2.0 | mA |
| DC gate voltage not to trigger | $V_{GD}$ | $T_J = T_J$ maximum, $V_{DRM}$ = Rated value | Maximum gate current/voltage not to trigger is the maximum value which will not trigger any unit with rated $V_{DRM}$ anode to cathode applied | 0.2 | V |

| THERMAL AND MECHANICAL SPECIFICATIONS | | | | | |
|---|---|---|---|---|---|
| PARAMETER | SYMBOL | TEST CONDITIONS | VALUES | | UNITS |
| Maximum operating junction and storage temperature range | $T_J$, $T_{Stg}$ | | -65 to +125 | | °C |
| Maximum thermal resistance, junction to case | $R_{thJC}$ | DC operation | 1.85 | | K/W |
| Maximum thermal resistance, case to heat sink | $R_{thCS}$ | Mounting surface, smooth, flat and greased | 0.35 | | |
| | | | TO NUT | TO DEVICE | |
| Mounting torque | | Lubricated threads (Non-lubricated threads) | 20 (27.5) | 25 | lbf · in |
| | | | 0.23 (0.32) | 0.29 | kgf · m |
| | | | 2.3 (3.1) | 2.8 | N · m |
| Approximate weight | | | 14 | | g |
| | | | 0.49 | | oz. |
| Case style | | See dimensions - link at the end of datasheet | TO-48 (TO-208AA) | | |

| $\Delta R_{thJC}$ CONDUCTION | | | | |
|---|---|---|---|---|
| CONDUCTION ANGLE | SINUSOIDAL CONDUCTION | RECTANGULAR CONDUCTION | TEST CONDITIONS | UNITS |
| 180° | 0.44 | 0.32 | $T_J = T_J$ maximum | K/W |
| 120° | 0.53 | 0.56 | | |
| 90° | 0.68 | 0.75 | | |
| 60° | 1.01 | 1.05 | | |
| 30° | 1.71 | 1.73 | | |

**Note**

- The table above shows the increment of thermal resistance $R_{thJC}$ when devices operate at different conduction angles than DC


For technical questions within your region: DiodesAmericas@vishay.com, DiodesAsia@vishay.com, DiodesEurope@vishay.com
THIS DOCUMENT IS SUBJECT TO CHANGE WITHOUT NOTICE. THE PRODUCTS DESCRIBED HEREIN AND THIS DOCUMENT ARE SUBJECT TO SPECIFIC DISCLAIMERS, SET FORTH AT www.vishay.com/doc?91000

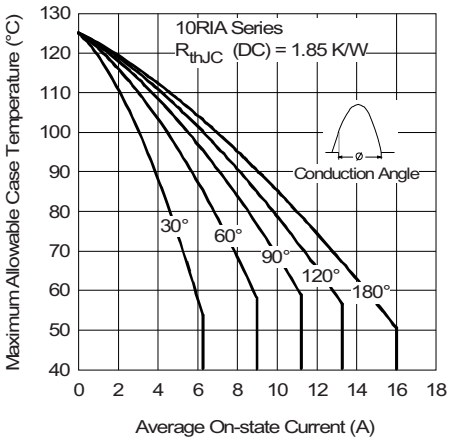


Fig. 1 - Current Ratings Characteristics

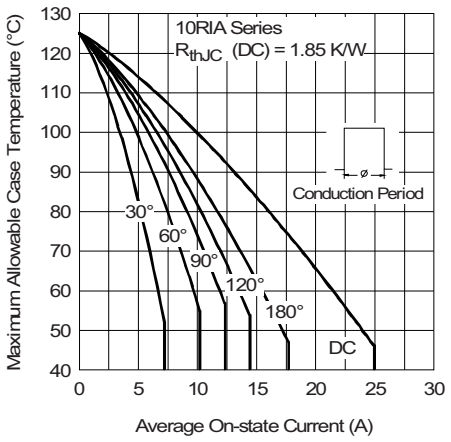


Fig. 2 - Current Ratings Characteristics

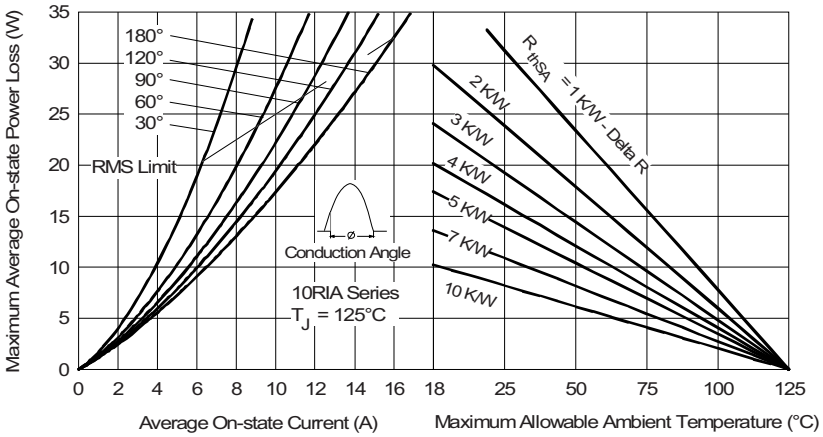


Fig. 3 - On-State Power Loss Characteristics

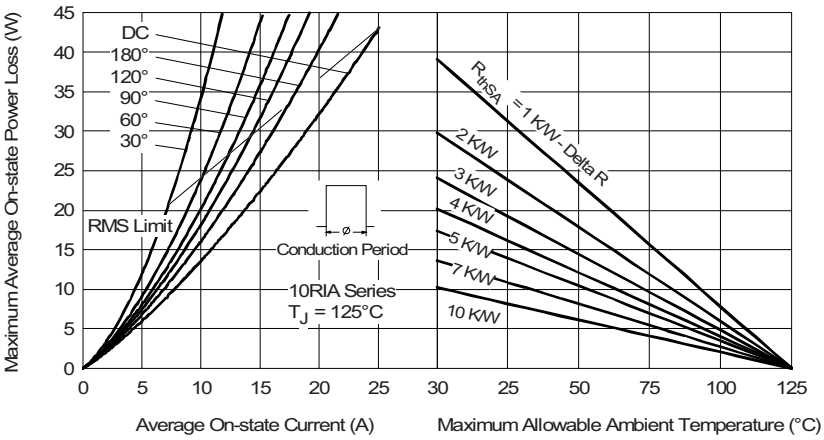


Fig. 4 - On-State Power Loss Characteristics


For technical questions within your region: DiodesAmericas@vishay.com, DiodesAsia@vishay.com, DiodesEurope@vishay.com
THIS DOCUMENT IS SUBJECT TO CHANGE WITHOUT NOTICE. THE PRODUCTS DESCRIBED HEREIN AND THIS DOCUMENT ARE SUBJECT TO SPECIFIC DISCLAIMERS, SET FORTH AT www.vishay.com/doc?91000

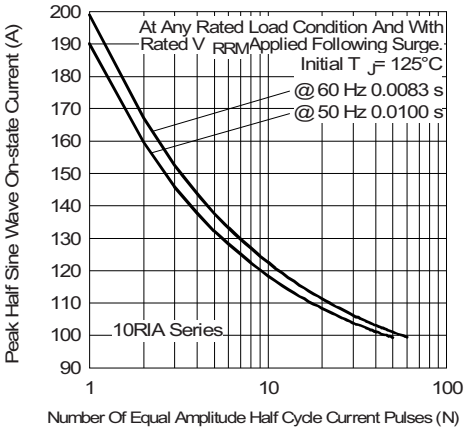


Fig. 5 - Maximum Non-Repetitive Surge Current

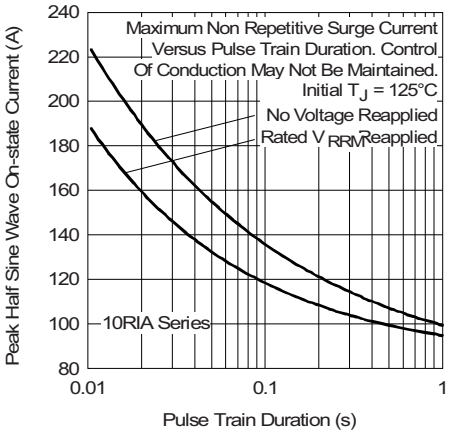


Fig. 6 - Maximum Non-Repetitive Surge Current

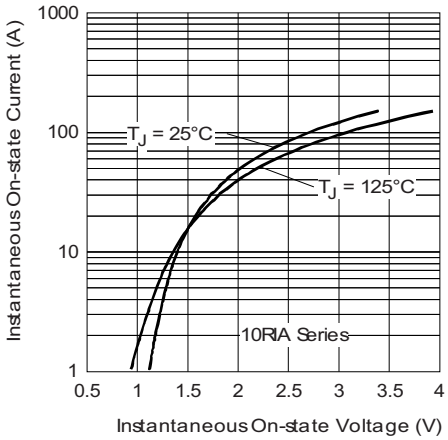


Fig. 7 - Forward Voltage Drop Characteristics

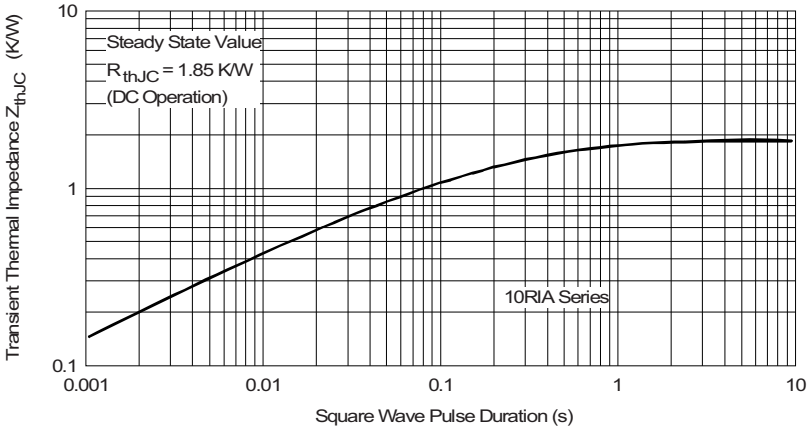


Fig. 8 - Thermal Impedance $Z_{thJC}$ Characteristics


For technical questions within your region: DiodesAmericas@vishay.com, DiodesAsia@vishay.com, DiodesEurope@vishay.com
THIS DOCUMENT IS SUBJECT TO CHANGE WITHOUT NOTICE. THE PRODUCTS DESCRIBED HEREIN AND THIS DOCUMENT ARE SUBJECT TO SPECIFIC DISCLAIMERS, SET FORTH AT www.vishay.com/doc?91000

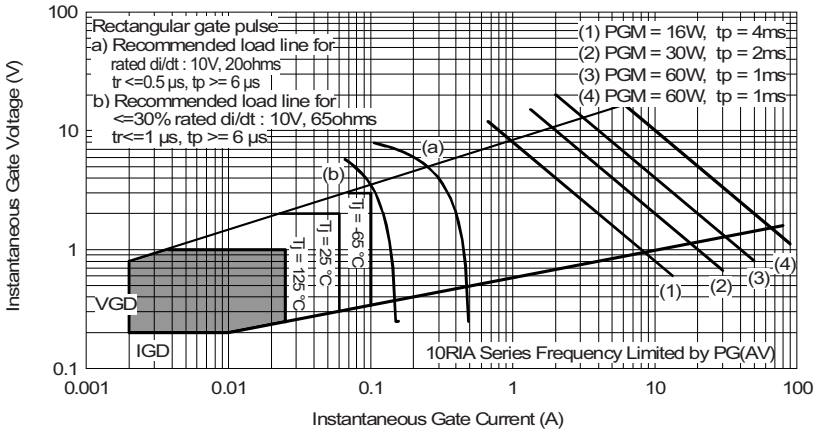


Fig. 9 - Gate Characteristics

## ORDERING INFORMATION TABLE

| Device code | VS- | 10 | RIA | 120 | M | S90 |
|---|---|---|---|---|---|---|
| | 1 | 2 | 3 | 4 | 5 | 6 |

1 - Vishay Semiconductors product

2 - Current code

3 - Essential part number

4 - Voltage code x 10 = $V_{RRM}$ (see Voltage Ratings table)

5 - None = stud base TO-48 (TO-208AA) 1/4" 28UNF-2A
M = stud base TO-48 (TO-208AA) M6 x 1

6 - Critical dV/dt:
None = 300 V/µs (standard value)
S90 = 1000 V/µs (special selection)

| LINKS TO RELATED DOCUMENTS | |
|---|---|
| Dimensions | www.vishay.com/doc?95333 |


For technical questions within your region: DiodesAmericas@vishay.com, DiodesAsia@vishay.com, DiodesEurope@vishay.com
THIS DOCUMENT IS SUBJECT TO CHANGE WITHOUT NOTICE. THE PRODUCTS DESCRIBED HEREIN AND THIS DOCUMENT ARE SUBJECT TO SPECIFIC DISCLAIMERS, SET FORTH AT www.vishay.com/doc?91000

# TO-208AA (TO-48)

**DIMENSIONS** in millimeters (inches)

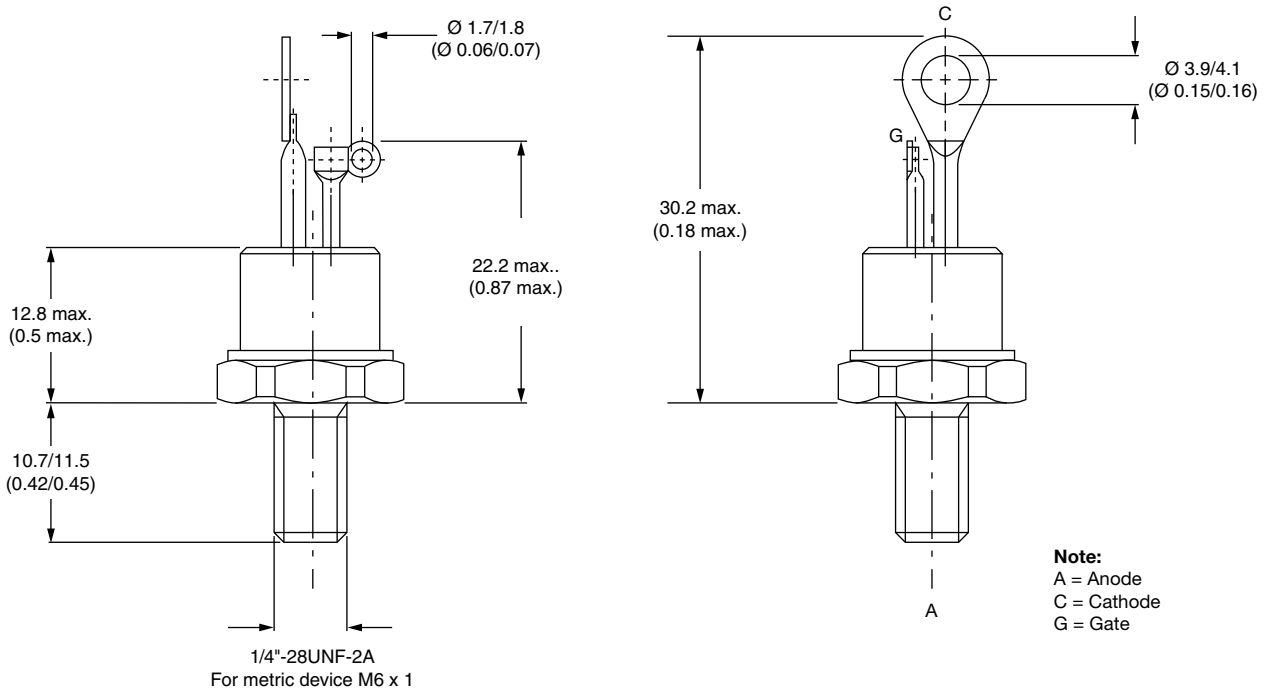


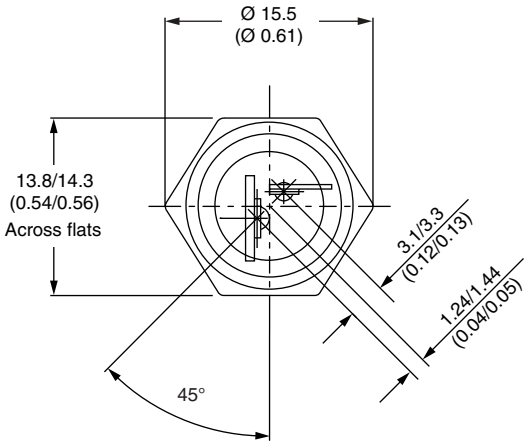




For technical questions within your region: DiodesAmericas@vishay.com, DiodesAsia@vishay.com, DiodesEurope@vishay.com

THIS DOCUMENT IS SUBJECT TO CHANGE WITHOUT NOTICE. THE PRODUCTS DESCRIBED HEREIN AND THIS DOCUMENT ARE SUBJECT TO SPECIFIC DISCLAIMERS, SET FORTH AT www.vishay.com/doc?91000

# Disclaimer

ALL PRODUCT, PRODUCT SPECIFICATIONS AND DATA ARE SUBJECT TO CHANGE WITHOUT NOTICE TO IMPROVE RELIABILITY, FUNCTION OR DESIGN OR OTHERWISE.

Vishay Intertechnology, Inc., its affiliates, agents, and employees, and all persons acting on its or their behalf (collectively, “Vishay”), disclaim any and all liability for any errors, inaccuracies or incompleteness contained in any datasheet or in any other disclosure relating to any product.

Vishay makes no warranty, representation or guarantee regarding the suitability of the products for any particular purpose or the continuing production of any product. To the maximum extent permitted by applicable law, Vishay disclaims (i) any and all liability arising out of the application or use of any product, (ii) any and all liability, including without limitation special, consequential or incidental damages, and (iii) any and all implied warranties, including warranties of fitness for particular purpose, non-infringement and merchantability.

Statements regarding the suitability of products for certain types of applications are based on Vishay's knowledge of typical requirements that are often placed on Vishay products in generic applications. Such statements are not binding statements about the suitability of products for a particular application. It is the customer's responsibility to validate that a particular product with the properties described in the product specification is suitable for use in a particular application. Parameters provided in datasheets and / or specifications may vary in different applications and performance may vary over time. All operating parameters, including typical parameters, must be validated for each customer application by the customer's technical experts. Product specifications do not expand or otherwise modify Vishay's terms and conditions of purchase, including but not limited to the warranty expressed therein.

Hyperlinks included in this datasheet may direct users to third-party websites. These links are provided as a convenience and for informational purposes only. Inclusion of these hyperlinks does not constitute an endorsement or an approval by Vishay of any of the products, services or opinions of the corporation, organization or individual associated with the third-party website. Vishay disclaims any and all liability and bears no responsibility for the accuracy, legality or content of the third-party website or for that of subsequent links.

Except as expressly indicated in writing, Vishay products are not designed for use in medical, life-saving, or life-sustaining applications or for any other application in which the failure of the Vishay product could result in personal injury or death. Customers using or selling Vishay products not expressly indicated for use in such applications do so at their own risk. Please contact authorized Vishay personnel to obtain written terms and conditions regarding products designed for such applications.

No license, express or implied, by estoppel or otherwise, to any intellectual property rights is granted by this document or by any conduct of Vishay. Product names and markings noted herein may be trademarks of their respective owners.

***© 2023 VISHAY INTERTECHNOLOGY, INC. ALL RIGHTS RESERVED***