Fast Recovery Diodes (Hockey PUK Version), 430 A

A-PUK (DO-200AA)

FEATURES

- High power fast recovery diode series
- 1.0 µs to 1.5 µs recovery time
- High voltage ratings up to 1600 V
- High current capability
- Optimized turn-on and turn-off characteristics
- Low forward recovery
- Fast and soft reverse recovery
- Press PUK encapsulation
- Case style conform to JEDEC® A-PUK (DO-200AA)
- Maximum junction temperature 125 °C
- Material categorization: for definitions of compliance please see www.vishay.com/doc?99912

RoHS COMPLIANT

PRIMARY CHARACTERISTICS	
$I_{F(AV)}$	430 A
Package	A-PUK (DO-200AA)
Circuit configuration	Single

TYPICAL APPLICATIONS

- Snubber diode for GTO
- High voltage freewheeling diode
- Fast recovery rectifier applications

MAJOR RATINGS AND CHARACTERISTICS			
PARAMETER	TEST CONDITIONS	VALUES	UNITS
$I_{F(AV)}$		430	A
	T_{hs}	55	°C
$I_{F(RMS)}$		675	A
	T_{hs}	25	°C
I_{FSM}	50 Hz	6180	A
	60 Hz	6470	
I^2t	50 Hz	191	kA^2s
	60 Hz	175	
V_{RRM}	Range	400 to 1600	V
t_{rr}		1.0, 1.5	µs
	T_J	25	°C
T_J		-40 to +125	

ELECTRICAL SPECIFICATIONS

VOLTAGE RATINGS				
TYPE NUMBER	VOLTAGE CODE	V_{RRM}, MAXIMUM REPETITIVE PEAK AND OFF-STATE VOLTAGE V	V_{RSM}, MAXIMUM NON-REPETITIVE PEAK VOLTAGE V	I_{RRM} MAXIMUM AT T_J = 125 °C mA
VS-SD403C..S10C	04	400	500	35
	08	800	900	
	10	1000	1100	
VS-SD403C..S15C	12	1200	1300	
	14	1400	1500	
	16	1600	1700	

For technical questions within your region: DiodesAmericas@vishay.com, DiodesAsia@vishay.com, DiodesEurope@vishay.com
THIS DOCUMENT IS SUBJECT TO CHANGE WITHOUT NOTICE. THE PRODUCTS DESCRIBED HEREIN AND THIS DOCUMENT ARE SUBJECT TO SPECIFIC DISCLAIMERS, SET FORTH AT www.vishay.com/doc?91000

FORWARD CONDUCTION

PARAMETER	SYMBOL	TEST CONDITIONS			VALUES	UNITS
Maximum average forward current at heatsink temperature	$I_{F(AV)}$	180° conduction, half sine wave Double side (single side) cooled			430 (210)	A
					55 (75)	°C
Maximum RMS current	$I_{F(RMS)}$	25 °C heatsink temperature double side cooled			675	A
Maximum peak, one-cycle , non-repetitive forward current	I_{FSM}	t = 10 ms	No voltage reapplied	Sinusoidal half wave, initial $T_J = T_J$ maximum	6180	
		t = 8.3 ms			6470	
		t = 10 ms	100 % V_{RRM} reapplied		5200	
		t = 8.3 ms			5445	
Maximum I^2t for fusing	I^2t	t = 10 ms	No voltage reapplied		191	kA^2s
		t = 8.3 ms			175	
		t = 10 ms	100 % V_{RRM} reapplied		135	
		t = 8.3 ms			123	
Maximum $I^2\sqrt{t}$ for fusing	$I^2\sqrt{t}$	t = 0.1 to 10 ms, no voltage reapplied			1910	$kA^2\sqrt{s}$
Low level value of threshold voltage	$V_{F(TO)1}$	(16.7 % x π x $I_{F(AV)} < I < \pi$ x $I_{F(AV)}$), $T_J = T_J$ maximum			1.00	V
High level value of threshold voltage	$V_{F(TO)2}$	(I > π x $I_{F(AV)}$), $T_J = T_J$ maximum			1.20	
Low level of forward slope resistance	r_{f1}	(16.7 % x π x $I_{F(AV)} < I < \pi$ x $I_{F(AV)}$), $T_J = T_J$ maximum			0.56	mΩ
High level of forward slope resistance	r_{f2}	(I > π x $I_{F(AV)}$), $T_J = T_J$ maximum			0.70	
Maximum forward voltage drop	V_{FM}	I_{pk} = 1350 A, T_J = 25 °C; t_p = 10 ms sinusoidal wave			1.83	V

RECOVERY CHARACTERISTICS

CODE	MAXIMUM VALUE AT T_J = 25 °C	TEST CONDITIONS			TYPICAL VALUES AT T_J = 125 °C		
	trr AT 25 % I_{RRM} (µs)	I_{pk} SQUARE PULSE (A)	dI/dt (A/µs)	V_r (V)	trr AT 25 % I_{RRM} (µs)	Q_{rr} (µC)	I_{rr} (A)
S10	1.0	750	25	-30	2.4	52	33
S15	1.5				2.9	90	44

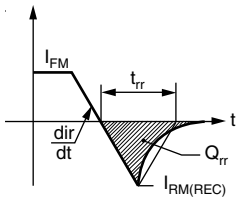

THERMAL AND MECHANICAL SPECIFICATIONS

PARAMETER	SYMBOL	TEST CONDITIONS	VALUES	UNITS
Maximum operating temperature range	T_J		-40 to 125	°C
Maximum storage temperature range	T_{Stg}		-40 to 150	
Maximum thermal resistance, junction to heatsink	R_{thJ-hs}	DC operation single side cooled	0.16	K/W
		DC operation double side cooled	0.08	
Mounting force, ± 10 %			4900 (500)	N (kg)
Approximate weight			70	g
Case style		See dimensions - link at the end of datasheet	A-PUK (DO-200AA)	

ΔR_{thJ-hs} CONDUCTION

CONDUCTION ANGLE	SINUSOIDAL CONDUCTION		RECTANGULAR CONDUCTION		TEST CONDITIONS	UNITS
	SINGLE SIDE	DOUBLE SIDE	SINGLE SIDE	DOUBLE SIDE		
180°	0.010	0.011	0.008	0.008	$T_J = T_J$ maximum	K/W
120°	0.012	0.013	0.013	0.013		
90°	0.016	0.016	0.018	0.018		
60°	0.024	0.024	0.025	0.025		
30°	0.042	0.042	0.042	0.042		

Note

- The table above shows the increment of thermal resistance R_{thJ-hs} when devices operate at different conduction angles than DC

For technical questions within your region: DiodesAmericas@vishay.com, DiodesAsia@vishay.com, DiodesEurope@vishay.com
THIS DOCUMENT IS SUBJECT TO CHANGE WITHOUT NOTICE. THE PRODUCTS DESCRIBED HEREIN AND THIS DOCUMENT ARE SUBJECT TO SPECIFIC DISCLAIMERS, SET FORTH AT www.vishay.com/doc?91000

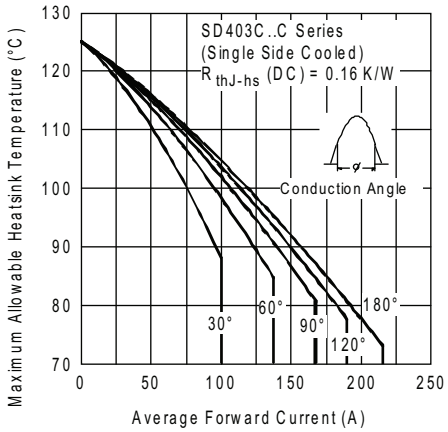

Fig. 1 - Current Ratings Characteristics

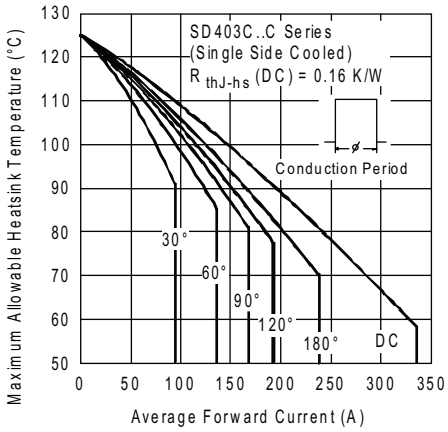

Fig. 2 - Current Ratings Characteristics

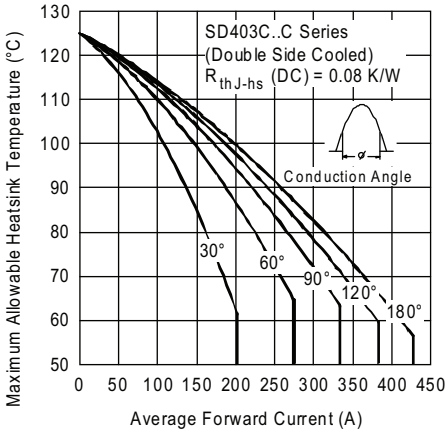

Fig. 3 - Current Ratings Characteristics

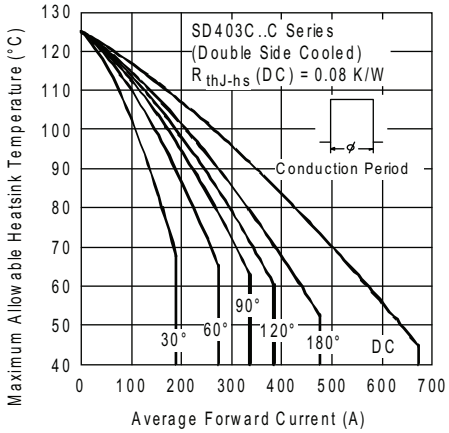

Fig. 4 - Current Ratings Characteristics

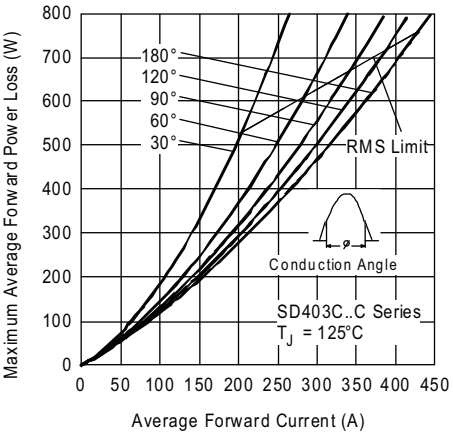

Fig. 5 - Forward Power Loss Characteristics

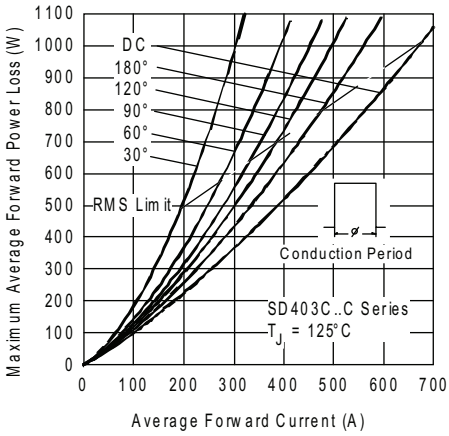

Fig. 6 - Forward Power Loss Characteristics

For technical questions within your region: DiodesAmericas@vishay.com, DiodesAsia@vishay.com, DiodesEurope@vishay.com
THIS DOCUMENT IS SUBJECT TO CHANGE WITHOUT NOTICE. THE PRODUCTS DESCRIBED HEREIN AND THIS DOCUMENT ARE SUBJECT TO SPECIFIC DISCLAIMERS, SET FORTH AT www.vishay.com/doc?91000

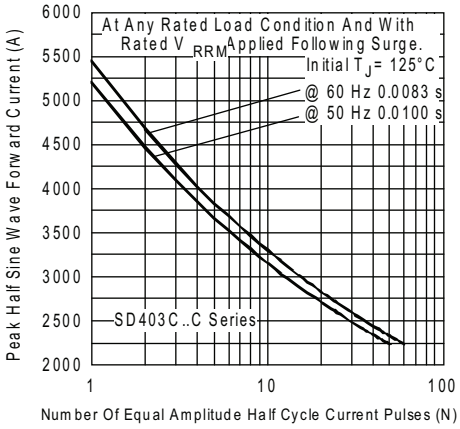

Fig. 7 - Maximum Non-Repetitive Surge Current Single and Double Side Cooled

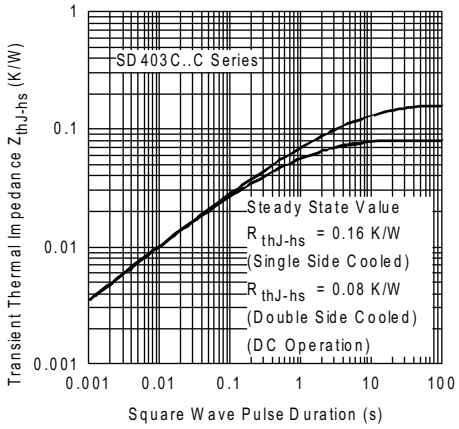

Fig. 1 - Thermal Impedance Z_{thJ-hs} Characteristics

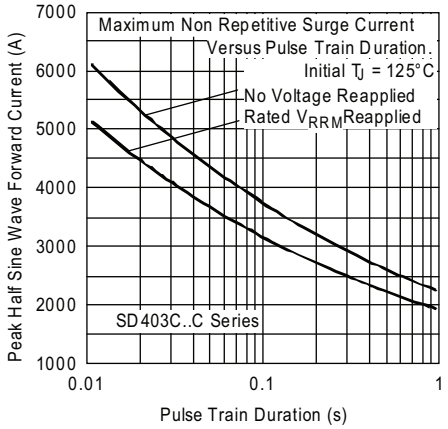

Fig. 8 - Maximum Non-Repetitive Surge Current Single and Double Side Cooled

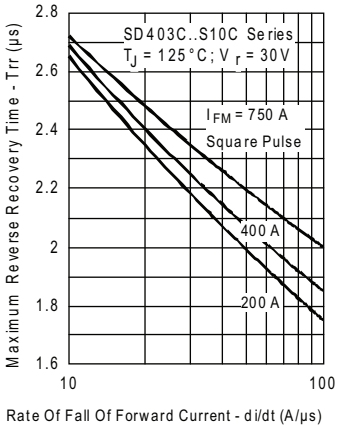

Fig. 10 - Recovery Time Characteristics

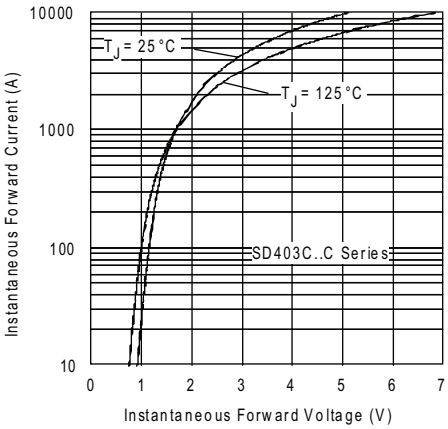

Fig. 9 - Forward Voltage Drop Characteristics

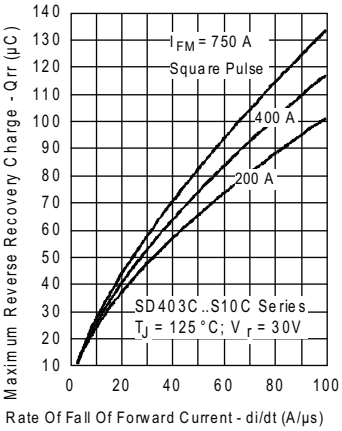

Fig. 11 - Recovery Charge Characteristics

For technical questions within your region: DiodesAmericas@vishay.com, DiodesAsia@vishay.com, DiodesEurope@vishay.com
THIS DOCUMENT IS SUBJECT TO CHANGE WITHOUT NOTICE. THE PRODUCTS DESCRIBED HEREIN AND THIS DOCUMENT ARE SUBJECT TO SPECIFIC DISCLAIMERS, SET FORTH AT www.vishay.com/doc?91000

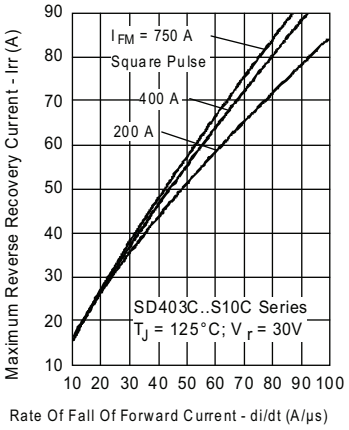

Fig. 12 - Recovery Current Characteristics

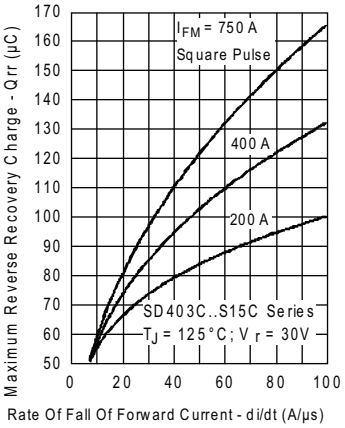

Fig. 14 - Recovery Charge Characteristics

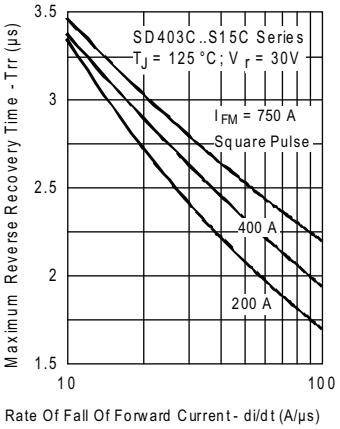

Fig. 13 - Recovery Time Characteristics

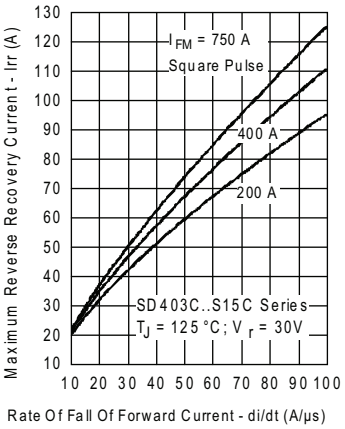

Fig. 15 - Recovery Current Characteristics

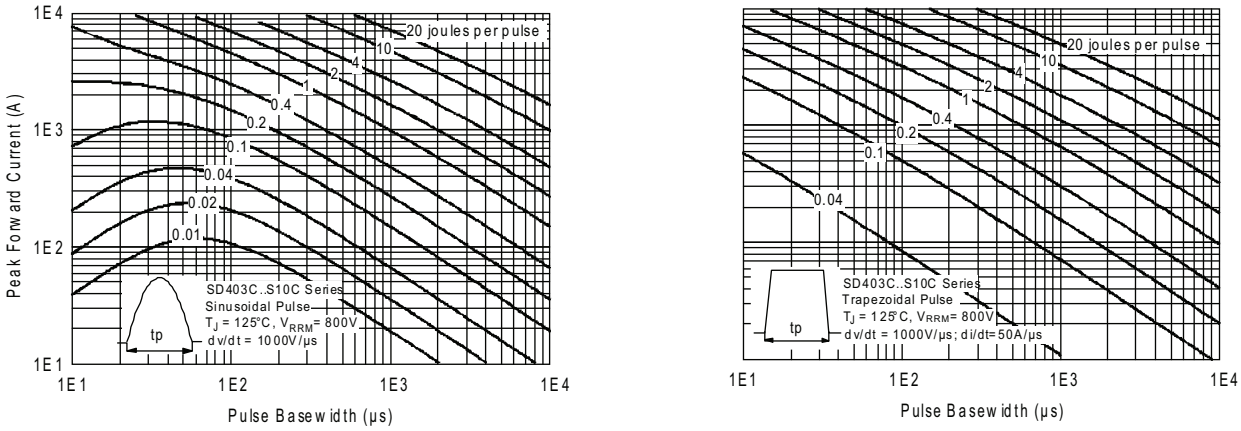

Fig. 16 - Maximum Total Energy Loss Per Pulse Characteristics

For technical questions within your region: DiodesAmericas@vishay.com, DiodesAsia@vishay.com, DiodesEurope@vishay.com
THIS DOCUMENT IS SUBJECT TO CHANGE WITHOUT NOTICE. THE PRODUCTS DESCRIBED HEREIN AND THIS DOCUMENT ARE SUBJECT TO SPECIFIC DISCLAIMERS, SET FORTH AT www.vishay.com/doc?91000

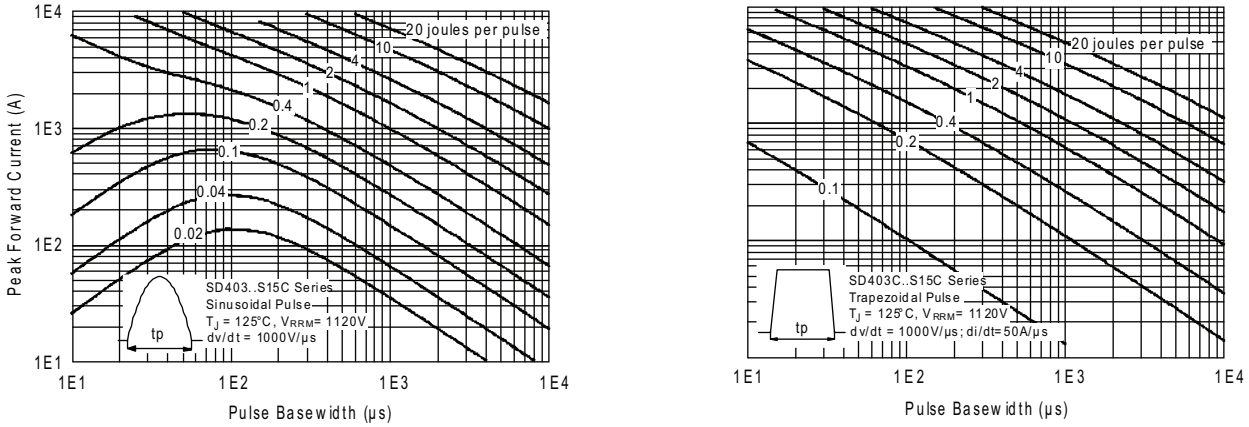

Fig. 17 - Maximum Total Energy Per Pulse Characteristics

ORDERING INFORMATION TABLE

Device code	VS-	SD	40	3	C	16	S15	C
	1	2	3	4	5	6	7	8

1 - Vishay Semiconductors product
2 - Diode
3 - Essential part number
4 - 3 = fast recovery
5 - C = ceramic PUK
6 - Voltage code x 100 = V_{RRM} (see Voltage Ratings table)
7 - t_{rr} code (see Recovery Characteristics table)
8 - C = PUK case A-PUK (DO-200AA)

LINKS TO RELATED DOCUMENTS	
Dimensions	www.vishay.com/doc?95248

For technical questions within your region: DiodesAmericas@vishay.com, DiodesAsia@vishay.com, DiodesEurope@vishay.com
THIS DOCUMENT IS SUBJECT TO CHANGE WITHOUT NOTICE. THE PRODUCTS DESCRIBED HEREIN AND THIS DOCUMENT ARE SUBJECT TO SPECIFIC DISCLAIMERS, SET FORTH AT www.vishay.com/doc?91000

DO-200AA

DIMENSIONS in millimeters (inches)

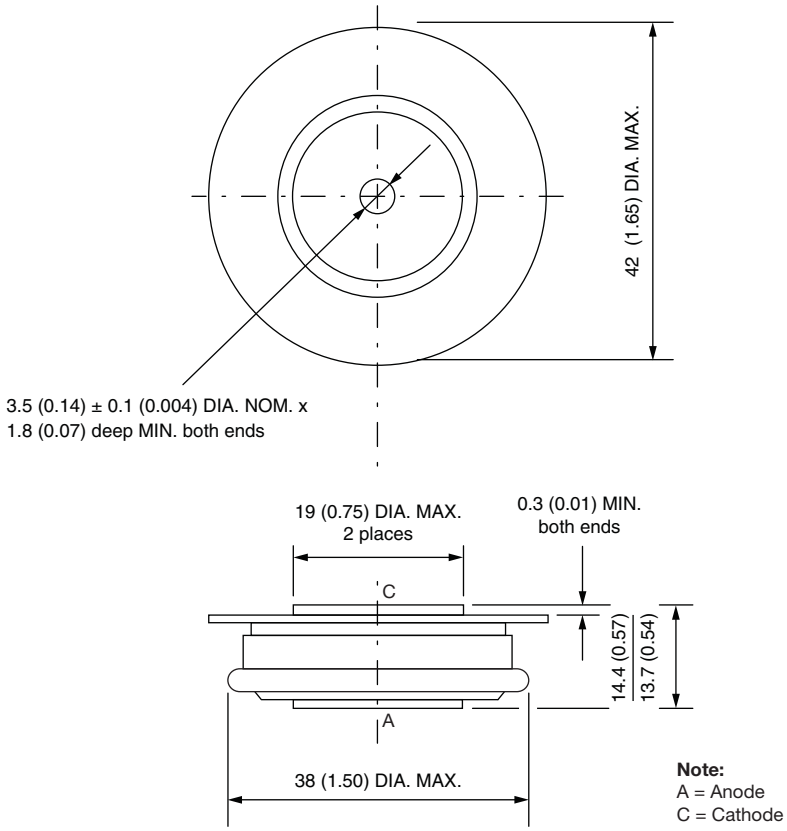

Quote between upper and lower pole pieces has to be considered after application of mounting force (see Thermal and Mechanical Specifications)

For technical questions within your region: DiodesAmericas@vishay.com, DiodesAsia@vishay.com, DiodesEurope@vishay.com

THIS DOCUMENT IS SUBJECT TO CHANGE WITHOUT NOTICE. THE PRODUCTS DESCRIBED HEREIN AND THIS DOCUMENT ARE SUBJECT TO SPECIFIC DISCLAIMERS, SET FORTH AT www.vishay.com/doc?91000

Disclaimer

ALL PRODUCT, PRODUCT SPECIFICATIONS AND DATA ARE SUBJECT TO CHANGE WITHOUT NOTICE TO IMPROVE RELIABILITY, FUNCTION OR DESIGN OR OTHERWISE.

Vishay Intertechnology, Inc., its affiliates, agents, and employees, and all persons acting on its or their behalf (collectively, “Vishay”), disclaim any and all liability for any errors, inaccuracies or incompleteness contained in any datasheet or in any other disclosure relating to any product.

Vishay makes no warranty, representation or guarantee regarding the suitability of the products for any particular purpose or the continuing production of any product. To the maximum extent permitted by applicable law, Vishay disclaims (i) any and all liability arising out of the application or use of any product, (ii) any and all liability, including without limitation special, consequential or incidental damages, and (iii) any and all implied warranties, including warranties of fitness for particular purpose, non-infringement and merchantability.

Statements regarding the suitability of products for certain types of applications are based on Vishay's knowledge of typical requirements that are often placed on Vishay products in generic applications. Such statements are not binding statements about the suitability of products for a particular application. It is the customer's responsibility to validate that a particular product with the properties described in the product specification is suitable for use in a particular application. Parameters provided in datasheets and / or specifications may vary in different applications and performance may vary over time. All operating parameters, including typical parameters, must be validated for each customer application by the customer's technical experts. Product specifications do not expand or otherwise modify Vishay's terms and conditions of purchase, including but not limited to the warranty expressed therein.

Hyperlinks included in this datasheet may direct users to third-party websites. These links are provided as a convenience and for informational purposes only. Inclusion of these hyperlinks does not constitute an endorsement or an approval by Vishay of any of the products, services or opinions of the corporation, organization or individual associated with the third-party website. Vishay disclaims any and all liability and bears no responsibility for the accuracy, legality or content of the third-party website or for that of subsequent links.

Except as expressly indicated in writing, Vishay products are not designed for use in medical, life-saving, or life-sustaining applications or for any other application in which the failure of the Vishay product could result in personal injury or death. Customers using or selling Vishay products not expressly indicated for use in such applications do so at their own risk. Please contact authorized Vishay personnel to obtain written terms and conditions regarding products designed for such applications.

No license, express or implied, by estoppel or otherwise, to any intellectual property rights is granted by this document or by any conduct of Vishay. Product names and markings noted herein may be trademarks of their respective owners.

© 2023 VISHAY INTERTECHNOLOGY, INC. ALL RIGHTS RESERVED