E Series Power MOSFET

Thin-Lead TO-220 FULLPAK

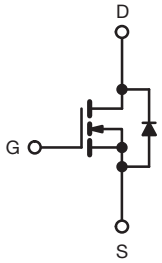

N-Channel MOSFET

FEATURES

- Low figure-of-merit (FOM) R_{on} x Q_g
- Low input capacitance (C_{iss})
- Reduced switching and conduction losses
- Low gate charge (Q_g)
- Avalanche energy rated (UIS)
- Material categorization: for definitions of compliance please see www.vishay.com/doc?99912

RoHS COMPLIANT
HALOGEN FREE Available

APPLICATIONS

- Computing
  - PC silver box / ATX power supplies
- Lighting
  - Two stage LED lighting
- Consumer electronics
- Applications using hard switched topologies
  - Power factor correction (PFC)
  - Two switch forward converter
  - Flyback converter
- Switch mode power supplies (SMPS)

PRODUCT SUMMARY		
V_{DS} (V) at T_J max.	550	
$R_{DS(on)}$ max. (Ω) at 25 °C	V_{GS} = 10 V	0.184
Q_g max. (nC)	92	
Q_{gs} (nC)	10	
Q_{gd} (nC)	19	
Configuration	Single	

ORDERING INFORMATION	
Package	Thin-Lead TO-220 FULLPAK
Lead (Pb)-free	SiHA20N50E-E3
Lead (Pb)-free and halogen-free	SiHA20N50E-GE3

ABSOLUTE MAXIMUM RATINGS (T_C = 25 °C, unless otherwise noted)

PARAMETER			SYMBOL	LIMIT	UNIT
Drain-source voltage			V_{DS}	500	V
Gate-source voltage			V_{GS}	± 30	
Continuous drain current (T_J = 150 °C) [e]	V_{GS} at 10 V	T_C = 25 °C	I_D	19	A
		T_C = 100 °C		12	
Pulsed drain current [a]			I_{DM}	42	
Linear derating factor				1.4	W/°C
Single pulse avalanche energy [b]			E_{AS}	204	mJ
Maximum power dissipation			P_D	34	W
Operating junction and storage temperature range			T_J, T_{stg}	-55 to +150	°C
Drain-source voltage slope	V_{DS} = 0 V to 80 % V_{DS}		dV/dt	70	V/ns
Reverse diode dV/dt [d]				32	
Soldering recommendations (peak temperature) [c]	for 10 s			300	°C
Mounting torque	M3 screw			0.6	Nm

Notes

a. Repetitive rating; pulse width limited by maximum junction temperature
b. V_{DD} = 50 V, starting T_J = 25 °C, L = 28.2 mH, R_g = 25 Ω, I_{AS} = 3.8 A
c. 1.6 mm from case
d. $I_{SD} \leq I_D$, dI/dt = 100 A/μs, starting T_J = 25 °C
e. Limited by maximum junction temperature

For technical questions, contact: hvm@vishay.com
THIS DOCUMENT IS SUBJECT TO CHANGE WITHOUT NOTICE. THE PRODUCTS DESCRIBED HEREIN AND THIS DOCUMENT ARE SUBJECT TO SPECIFIC DISCLAIMERS, SET FORTH AT www.vishay.com/doc?91000

THERMAL RESISTANCE RATINGS				
PARAMETER	**SYMBOL**	**TYP.**	**MAX.**	**UNIT**
Maximum junction-to-ambient	R_{thJA}	-	65	°C/W
Maximum junction-to-case (drain)	R_{thJC}	-	3.7	

SPECIFICATIONS (T_J = 25 °C, unless otherwise noted)							
PARAMETER	**SYMBOL**	**TEST CONDITIONS**		**MIN.**	**TYP.**	**MAX.**	**UNIT**
Static							
Drain-source breakdown voltage	V_{DS}	V_{GS} = 0 V, I_D = 250 μA		500	-	-	V
V_{DS} temperature coefficient	$\Delta V_{DS}/T_J$	Reference to 25 °C, I_D = 1 mA		-	0.59	-	V/°C
Gate-source threshold voltage (N)	$V_{GS(th)}$	V_{DS} = V_{GS}, I_D = 250 μA		2.0	-	4.0	V
Gate-source leakage	I_{GSS}	V_{GS} = ± 20 V		-	-	± 100	nA
		V_{GS} = ± 30 V		-	-	± 1	μA
Zero gate voltage drain current	I_{DSS}	V_{DS} = 500 V, V_{GS} = 0 V		-	-	1	μA
		V_{DS} = 400 V, V_{GS} = 0 V, T_J = 125 °C		-	-	10	
Drain-source on-state resistance	$R_{DS(on)}$	V_{GS} = 10 V	I_D = 10 A	-	0.160	0.184	Ω
Forward transconductance	g_{fs}	V_{DS} = 30 V, I_D = 10 A		-	4.4	-	S
Dynamic							
Input capacitance	C_{iss}	V_{GS} = 0 V, V_{DS} = 100 V, f = 1 MHz		-	1640	-	pF
Output capacitance	C_{oss}			-	87	-	
Reverse transfer capacitance	C_{rss}			-	6	-	
Effective output capacitance, energy related [a]	$C_{o(er)}$	V_{DS} = 0 V to 400 V, V_{GS} = 0 V		-	73	-	
Effective output capacitance, time related [b]	$C_{o(tr)}$			-	222	-	
Total gate charge	Q_g	V_{GS} = 10 V	I_D = 10 A, V_{DS} = 400 V	-	46	92	nC
Gate-source charge	Q_{gs}			-	10	-	
Gate-drain charge	Q_{gd}			-	19	-	
Turn-on delay time	$t_{d(on)}$	V_{DD} = 400 V, I_D = 10 A, V_{GS} = 10 V, R_g = 9.1 Ω		-	17	34	ns
Rise time	t_r			-	27	54	
Turn-off delay time	$t_{d(off)}$			-	48	96	
Fall time	t_f			-	25	50	
Gate input resistance	R_g	f = 1 MHz, open drain		-	0.83	-	Ω
Drain-Source Body Diode Characteristics							
Continuous source-drain diode current	I_S	MOSFET symbol showing the integral reverse p - n junction diode		-	-	19	A
Pulsed diode forward current	I_{SM}			-	-	42	
Diode forward voltage	V_{SD}	T_J = 25 °C, I_S = 10 A, V_{GS} = 0 V		-	-	1.2	V
Reverse recovery time	t_{rr}	T_J = 25 °C, I_F = I_S = 10 A, dI/dt = 100 A/μs, V_R = 25 V		-	293	-	ns
Reverse recovery charge	Q_{rr}			-	4.0	-	μC
Reverse recovery current	I_{RRM}			-	26	-	A

Notes

a. $C_{oss(er)}$ is a fixed capacitance that gives the same energy as C_{oss} while V_{DS} is rising from 0 % to 80 % V_{DSS}

b. $C_{oss(tr)}$ is a fixed capacitance that gives the same charging time as C_{oss} while V_{DS} is rising from 0 % to 80 % V_{DSS}

For technical questions, contact: hvm@vishay.com
THIS DOCUMENT IS SUBJECT TO CHANGE WITHOUT NOTICE. THE PRODUCTS DESCRIBED HEREIN AND THIS DOCUMENT ARE SUBJECT TO SPECIFIC DISCLAIMERS, SET FORTH AT www.vishay.com/doc?91000

TYPICAL CHARACTERISTICS (25 °C, unless otherwise noted)

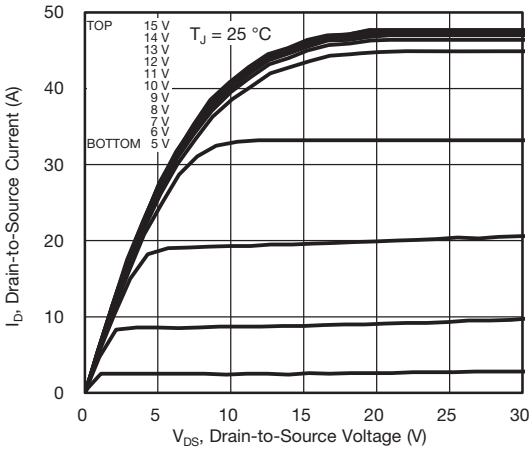

Fig. 1 - Typical Output Characteristics

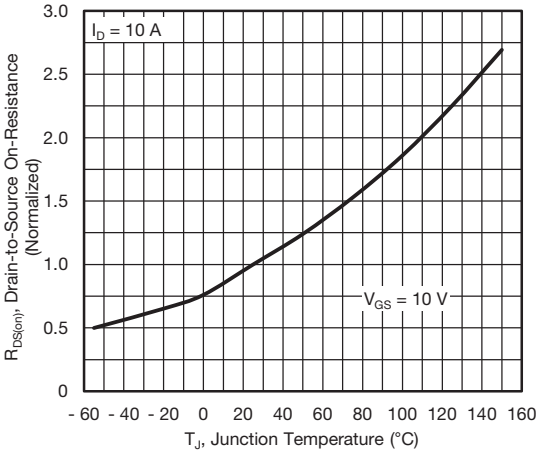

Fig. 4 - Normalized On-Resistance vs. Temperature

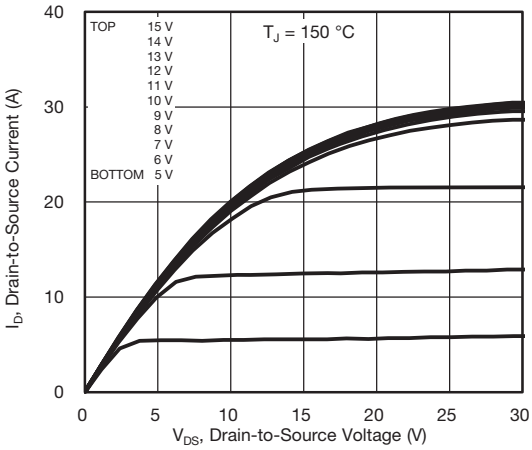

Fig. 2 - Typical Output Characteristics

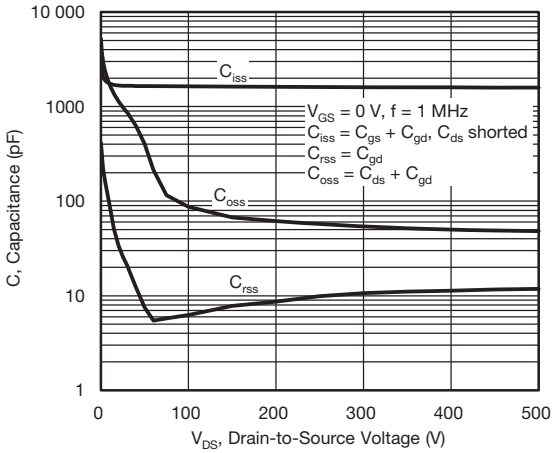

Fig. 5 - Typical Capacitance vs. Drain-to-Source Voltage

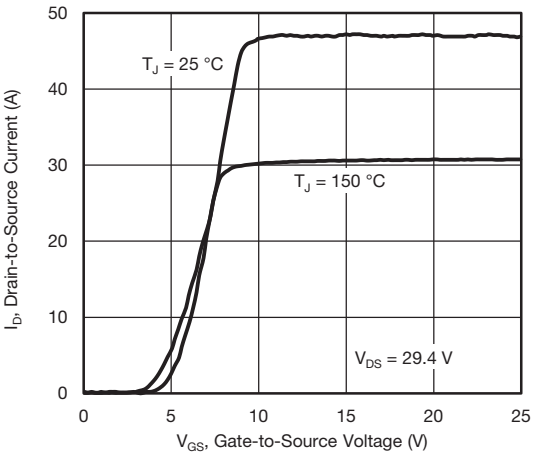

Fig. 3 - Typical Transfer Characteristics

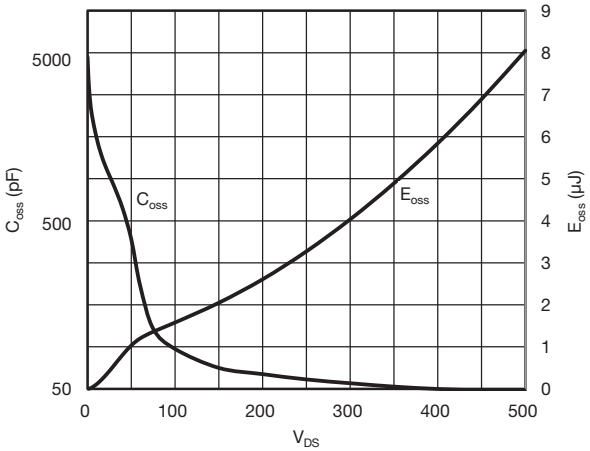

Fig. 6 - C_{oss} and E_{oss} vs. V_{DS}

For technical questions, contact: hvm@vishay.com
THIS DOCUMENT IS SUBJECT TO CHANGE WITHOUT NOTICE. THE PRODUCTS DESCRIBED HEREIN AND THIS DOCUMENT ARE SUBJECT TO SPECIFIC DISCLAIMERS, SET FORTH AT www.vishay.com/doc?91000

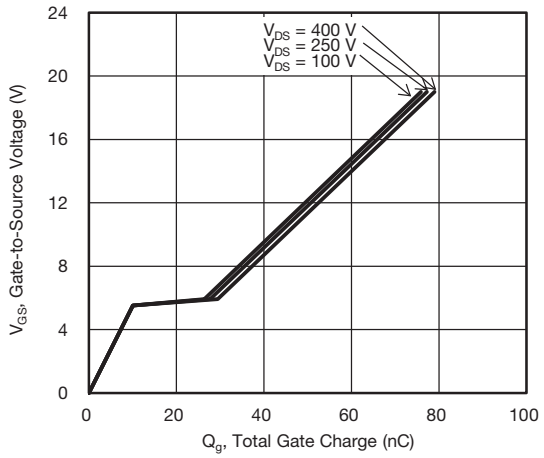

Fig. 7 - Typical Gate Charge vs. Gate-to-Source Voltage

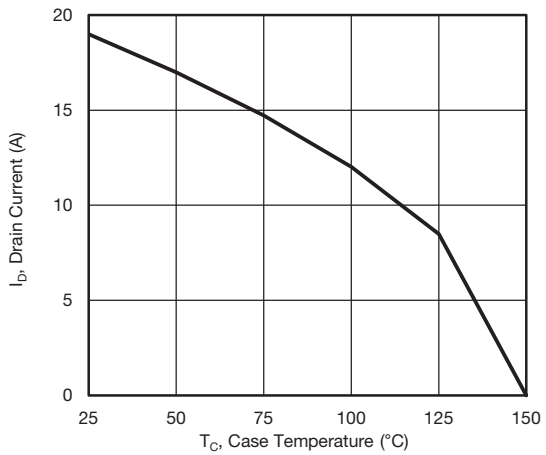

Fig. 10 - Maximum Drain Current vs. Case Temperature

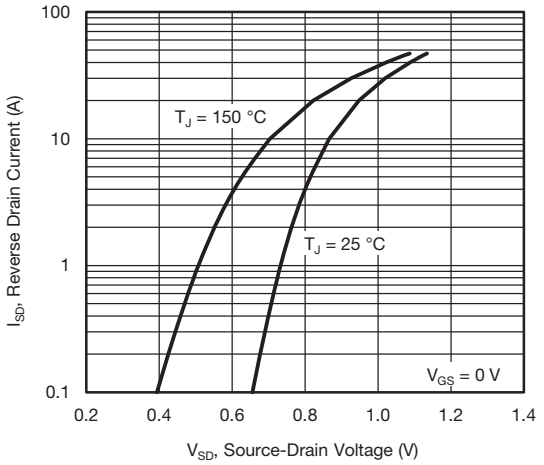

Fig. 8 - Typical Source-Drain Diode Forward Voltage

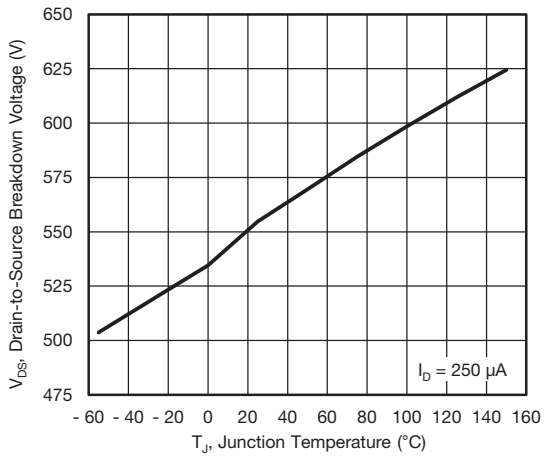

Fig. 11 - Temperature vs. Drain-to-Source Voltage

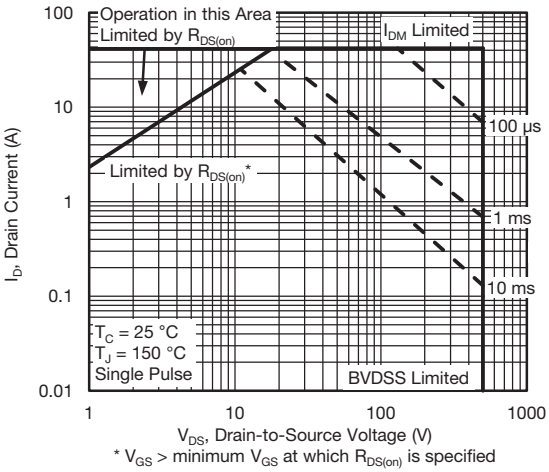

Fig. 9 - Maximum Safe Operating Area

For technical questions, contact: hvm@vishay.com
THIS DOCUMENT IS SUBJECT TO CHANGE WITHOUT NOTICE. THE PRODUCTS DESCRIBED HEREIN AND THIS DOCUMENT ARE SUBJECT TO SPECIFIC DISCLAIMERS, SET FORTH AT www.vishay.com/doc?91000

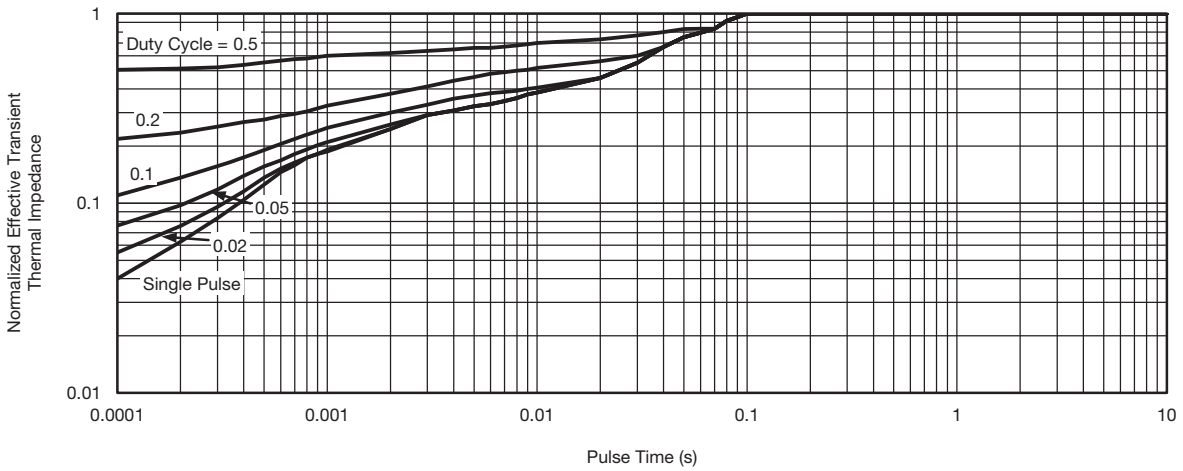

Fig. 12 - Normalized Thermal Transient Impedance, Junction-to-Case

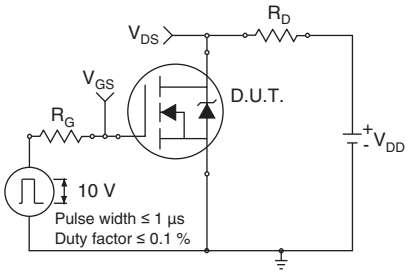

Fig. 13 - Switching Time Test Circuit

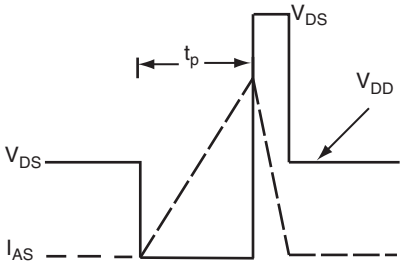

Fig. 16 - Unclamped Inductive Waveforms

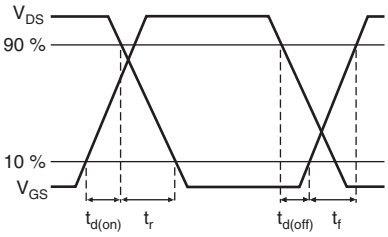

Fig. 14 - Switching Time Waveforms

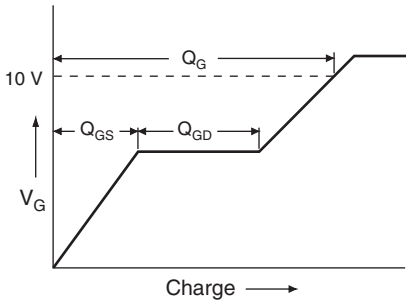

Fig. 17 - Basic Gate Charge Waveform

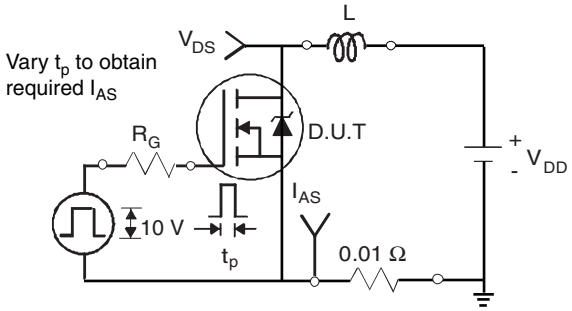

Fig. 15 - Unclamped Inductive Test Circuit

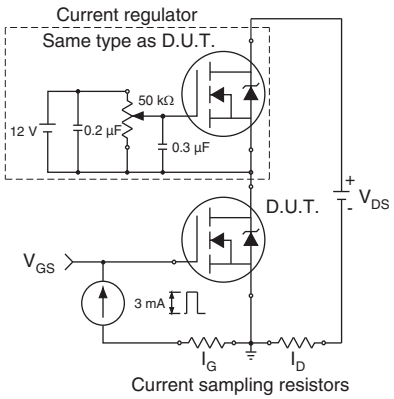

Fig. 18 - Gate Charge Test Circuit

For technical questions, contact: hvm@vishay.com
THIS DOCUMENT IS SUBJECT TO CHANGE WITHOUT NOTICE. THE PRODUCTS DESCRIBED HEREIN AND THIS DOCUMENT ARE SUBJECT TO SPECIFIC DISCLAIMERS, SET FORTH AT www.vishay.com/doc?91000

Peak Diode Recovery dV/dt Test Circuit

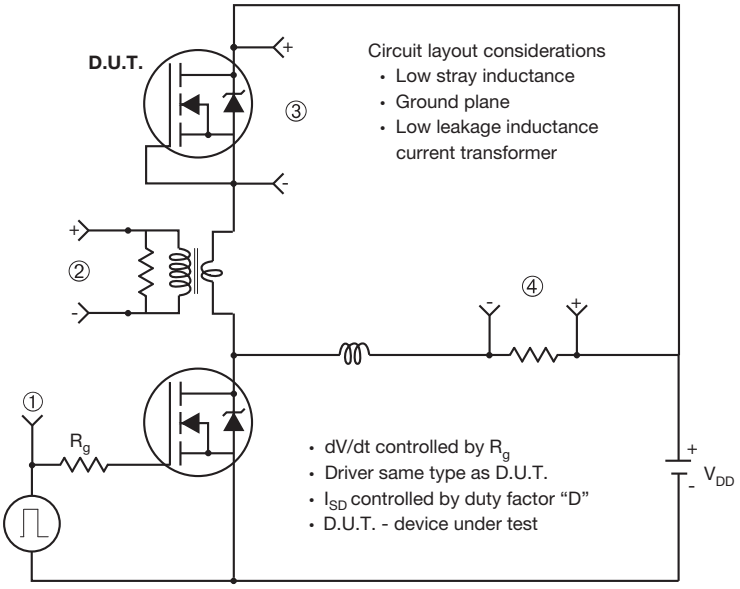

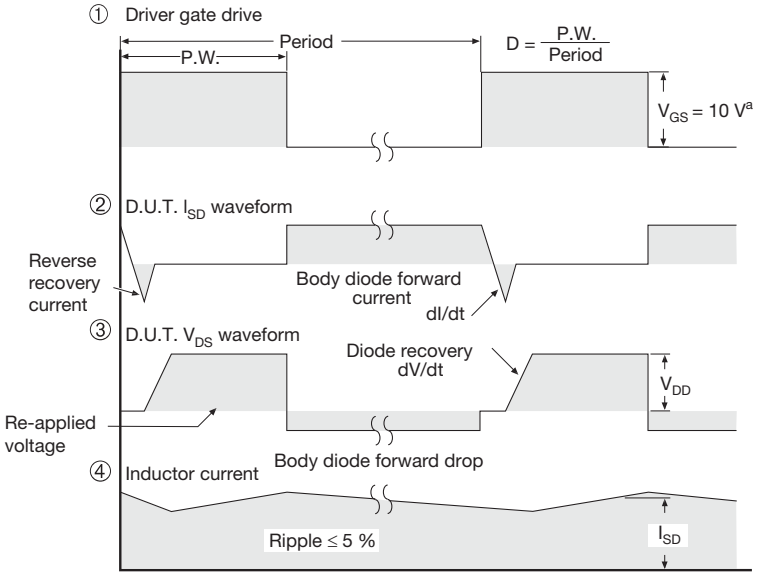

Note

a. V_{GS} = 5 V for logic level devices

Fig. 19 - For N-Channel

Vishay Siliconix maintains worldwide manufacturing capability. Products may be manufactured at one of several qualified locations. Reliability data for Silicon Technology and Package Reliability represent a composite of all qualified locations. For related documents such as package/tape drawings, part marking, and reliability data, see www.vishay.com/ppg?91638.

For technical questions, contact: hvm@vishay.com
THIS DOCUMENT IS SUBJECT TO CHANGE WITHOUT NOTICE. THE PRODUCTS DESCRIBED HEREIN AND THIS DOCUMENT ARE SUBJECT TO SPECIFIC DISCLAIMERS, SET FORTH AT www.vishay.com/doc?91000

TO-220 FULLPAK Thin Lead

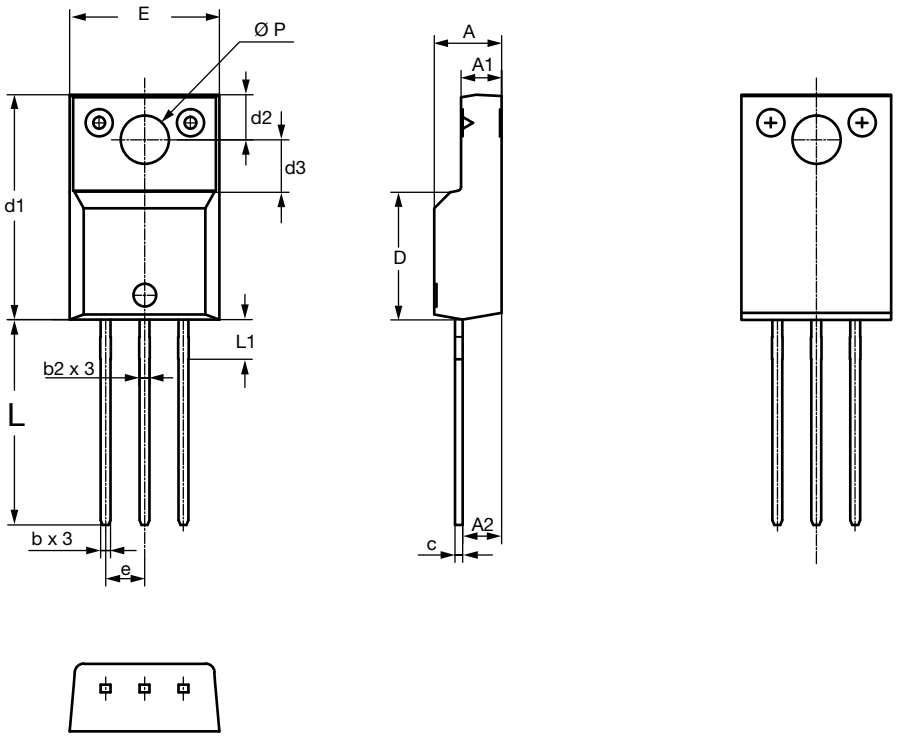

SYMBOL	DIMENSIONS			
	MILLIMETERS		INCHES	
	MIN.	MAX.	MIN.	MAX.
A	4.30	4.70	0.169	0.185
A1	2.50	2.90	0.098	0.114
A2	2.40	2.80	0.094	0.110
b	0.60	0.80	0.024	0.031
b2	0.60	0.90	0.024	0.035
c	-	0.60	-	0.024
D	8.30	8.70	0.327	0.342
d1	14.70	15.30	0.579	0.602
d2	2.90	3.10	0.114	0.122
d3	3.30	3.70	0.130	0.146
E	9.70	10.30	0.382	0.406
e	2.50	2.70	0.098	0.106
L	13.40	13.80	0.528	0.543
L1	1.00	2.80	0.039	0.110
Ø P	3.00	3.40	0.118	0.134
ECN: E20-0684-Rev. D, 28-Dec-2020 DWG: 6021				

For technical questions, contact:

THIS DOCUMENT IS SUBJECT TO CHANGE WITHOUT NOTICE. THE PRODUCTS DESCRIBED HEREIN AND THIS DOCUMENT ARE SUBJECT TO SPECIFIC DISCLAIMERS, SET FORTH AT www.vishay.com/doc?91000

Disclaimer

ALL PRODUCT, PRODUCT SPECIFICATIONS AND DATA ARE SUBJECT TO CHANGE WITHOUT NOTICE TO IMPROVE RELIABILITY, FUNCTION OR DESIGN OR OTHERWISE.

Vishay Intertechnology, Inc., its affiliates, agents, and employees, and all persons acting on its or their behalf (collectively, “Vishay”), disclaim any and all liability for any errors, inaccuracies or incompleteness contained in any datasheet or in any other disclosure relating to any product.

Vishay makes no warranty, representation or guarantee regarding the suitability of the products for any particular purpose or the continuing production of any product. To the maximum extent permitted by applicable law, Vishay disclaims (i) any and all liability arising out of the application or use of any product, (ii) any and all liability, including without limitation special, consequential or incidental damages, and (iii) any and all implied warranties, including warranties of fitness for particular purpose, non-infringement and merchantability.

Statements regarding the suitability of products for certain types of applications are based on Vishay's knowledge of typical requirements that are often placed on Vishay products in generic applications. Such statements are not binding statements about the suitability of products for a particular application. It is the customer's responsibility to validate that a particular product with the properties described in the product specification is suitable for use in a particular application. Parameters provided in datasheets and / or specifications may vary in different applications and performance may vary over time. All operating parameters, including typical parameters, must be validated for each customer application by the customer's technical experts. Product specifications do not expand or otherwise modify Vishay's terms and conditions of purchase, including but not limited to the warranty expressed therein.

Hyperlinks included in this datasheet may direct users to third-party websites. These links are provided as a convenience and for informational purposes only. Inclusion of these hyperlinks does not constitute an endorsement or an approval by Vishay of any of the products, services or opinions of the corporation, organization or individual associated with the third-party website. Vishay disclaims any and all liability and bears no responsibility for the accuracy, legality or content of the third-party website or for that of subsequent links.

Except as expressly indicated in writing, Vishay products are not designed for use in medical, life-saving, or life-sustaining applications or for any other application in which the failure of the Vishay product could result in personal injury or death. Customers using or selling Vishay products not expressly indicated for use in such applications do so at their own risk. Please contact authorized Vishay personnel to obtain written terms and conditions regarding products designed for such applications.

No license, express or implied, by estoppel or otherwise, to any intellectual property rights is granted by this document or by any conduct of Vishay. Product names and markings noted herein may be trademarks of their respective owners.

© 2023 VISHAY INTERTECHNOLOGY, INC. ALL RIGHTS RESERVED