Power MOSFET

DPAK (TO-252)

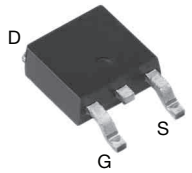

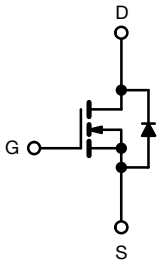

N-Channel MOSFET

PRODUCT SUMMARY		
V_{DS} (V)	50	
$R_{DS(on)}$ (Ω)	V_{GS} = 10 V	0.20
Q_g (Max.) (nC)	10	
Q_{gs} (nC)	2.6	
Q_{gd} (nC)	4.8	
Configuration	Single	

FEATURES

- Low drive current
- Surface-mount
- Fast switching
- Ease of paralleling
- Excellent temperature stability
- Material categorization: for definitions of compliance please see www.vishay.com/doc?99912

RoHS COMPLIANT

DESCRIPTION

The power MOSFET technology is the key to Vishay's advanced line of power MOSFET transistors. The efficient geometry and unique processing of this latest "State of the Art" design achieves: very low on-state resistance combined with high transconductance; superior reverse energy and diode recovery dV/dt capability.

The power MOSFET transistors also feature all of the well established advantages of MOSFET'S such as voltage control, very fast switching, ease of paralleling and temperature stability of the electrical parameters.

Surface mount packages enhance circuit performance by reducing stray inductances and capacitance. The DPAK (TO-252) surface-mount package brings the advantages of power MOSFET's to high volume applications where PC Board surface mounting is desirable. The surface mount option IRFR9012, SiHFR9012 is provided on 16 mm tape. The straight lead option IRFU9012, SiHFU9012 of the device is called the IPAK (TO-251).

They are well suited for applications where limited heat dissipation is required such as, computers and peripherals, telecommunication equipment, dc-to-dc converters, and a wide range of consumer products.

ORDERING INFORMATION				
Package	DPAK (TO-252)	DPAK (TO-252)	DPAK (TO-252)	DPAK (TO-252)
Lead (Pb)-free and halogen-free	SiHFR010-GE3	SiHFR010TR-GE3	SiHFR010TRL-GE3	IRFR010PbF-BE3
Lead (Pb)-free	IRFR010PbF	IRFR010TRPbF	IRFR010TRLPbF	IRFR010TRRPbF

ABSOLUTE MAXIMUM RATINGS (T_C = 25 °C, unless otherwise noted)

PARAMETER			SYMBOL	LIMIT	UNIT
Drain-source voltage			V_{DS}	50	V
Gate-source voltage			V_{GS}	± 20	
Continuous drain current	V_{GS} at 10 V	T_C = 25 °C	I_D	8.2	A
		T_C = 100 °C		5.2	
Pulsed drain current [a]			I_{DM}	33	
Avalanche current [b]			I_{AS}	1.5	
Linear derating factor				0.20	W/°C
Maximum power dissipation	T_C = 25 °C		P_D	25	W
Peak diode recovery dV/dt [c]			dV/dt	2.0	V/ns
Operating junction and storage temperature range			T_J, T_{stg}	-55 to +150	°C
Soldering recommendations (peak temperature) [d]	For 10 s			300	

Notes

a. Repetitive rating; pulse width limited by maximum junction temperature (see fig. 11)
b. V_{DD} = 25 V, starting T_J = 25 °C, L = 100 μH, R_g = 25 Ω
c. $I_{SD} \leq$ 8.2 A, dI/dt ≤ 130 A/μs, $V_{DD} \leq$ 40 V, $T_J \leq$ 150 °C
d. 1.6 mm from case
e. When mounted on 1" square PCB (FR-4 or G-10 material)

For technical questions, contact: hvm@vishay.com
THIS DOCUMENT IS SUBJECT TO CHANGE WITHOUT NOTICE. THE PRODUCTS DESCRIBED HEREIN AND THIS DOCUMENT ARE SUBJECT TO SPECIFIC DISCLAIMERS, SET FORTH AT www.vishay.com/doc?91000

THERMAL RESISTANCE RATINGS					
PARAMETER	**SYMBOL**	**MIN.**	**TYP.**	**MAX.**	**UNIT**
Maximum junction-to-ambient	R_{thJA}	-	-	110	°C/W
Case-to-sink	R_{thCS}	-	1.7	-	
Maximum junction-to-case (drain)	R_{thJC}	-	-	5.0	

SPECIFICATIONS (T_J = 25 °C, unless otherwise noted)							
PARAMETER	**SYMBOL**	**TEST CONDITIONS**		**MIN.**	**TYP.**	**MAX.**	**UNIT**
Static							
Drain-source breakdown voltage	V_{DS}	V_{GS} = 0 V, I_D = 250 μA		50	-	-	V
Gate-source threshold voltage	$V_{GS(th)}$	V_{DS} = V_{GS}, I_D = 250 μA		2.0	-	4.0	V
Gate-source leakage	I_{GSS}	V_{GS} = ± 20 V		-	-	± 500	nA
Zero gate voltage drain current	I_{DSS}	V_{DS} = 50 V, V_{GS} = 0 V		-	-	250	μA
		V_{DS} = 40 V, V_{GS} = 0 V, T_J = 125 °C		-	-	1000	
Drain-source on-state resistance	$R_{DS(on)}$	V_{GS} = 10 V	I_D = 4.6 A[b]	-	0.16	0.20	Ω
Forward transconductance	g_{fs}	V_{DS} ≥ 50 V, I_D = 3.6 A		2.1	3.1	-	S
Dynamic							
Input capacitance	C_{iss}	V_{GS} = 0 V, V_{DS} = 25 V, f = 1.0 MHz, see fig. 10		-	250	-	pF
Output capacitance	C_{oss}			-	150	-	
Reverse transfer capacitance	C_{rss}			-	29	-	
Total gate charge	Q_g	V_{GS} = 10 V	I_D = 7.3 A, V_{DS} = 40 V, see fig. 6 and 13[b]	-	6.7	10	nC
Gate-source charge	Q_{gs}			-	1.8	2.6	
Gate-drain charge	Q_{gd}			-	3.2	4.8	
Turn-on delay time	$t_{d(on)}$	V_{DD} = 25 V, I_D = 7.3 A, R_g = 24 Ω, R_D = 3.3 Ω, see fig. 10[b]		-	11	17	ns
Rise time	t_r			-	33	50	
Turn-off delay time	$t_{d(off)}$			-	12	18	
Fall time	t_f			-	23	35	
Internal drain inductance	L_D	Between lead, 6 mm (0.25") from package and center of die contact[c] 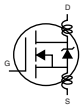		-	4.5	-	nH
Internal source inductance	L_S			-	7.5	-	
Drain-Source Body Diode Characteristics							
Continuous source-drain diode current	I_S	MOSFET symbol showing the integral reverse p - n junction diode		-	-	8.2	A
Pulsed diode forward current [a]	I_{SM}			-	-	33	
Body diode voltage	V_{SD}	T_J = 25 °C, I_S = 8.2 A, V_{GS} = 0 V[b]		-	-	1.6	V
Body diode reverse recovery time	t_{rr}	T_J = 25 °C, I_F = 7.3 A, dI/dt = 100 A/μs[b]		41	86	190	ns
Body diode reverse recovery charge	Q_{rr}			0.15	0.33	0.78	μC
Forward turn-on time	t_{on}	Intrinsic turn-on time is negligible (turn-on is dominated by L_S and L_D)					

Notes

a. Repetitive rating; pulse width limited by maximum junction temperature (see fig. 11)

b. Pulse width ≤ 300 μs; duty cycle ≤ 2 %

For technical questions, contact: hvm@vishay.com
THIS DOCUMENT IS SUBJECT TO CHANGE WITHOUT NOTICE. THE PRODUCTS DESCRIBED HEREIN AND THIS DOCUMENT ARE SUBJECT TO SPECIFIC DISCLAIMERS, SET FORTH AT www.vishay.com/doc?91000

TYPICAL CHARACTERISTICS (25 °C, unless otherwise noted)

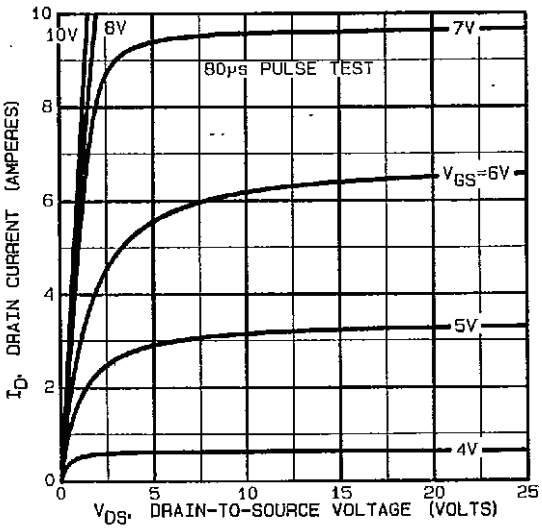

Fig. 1 - Typical Output Characteristics

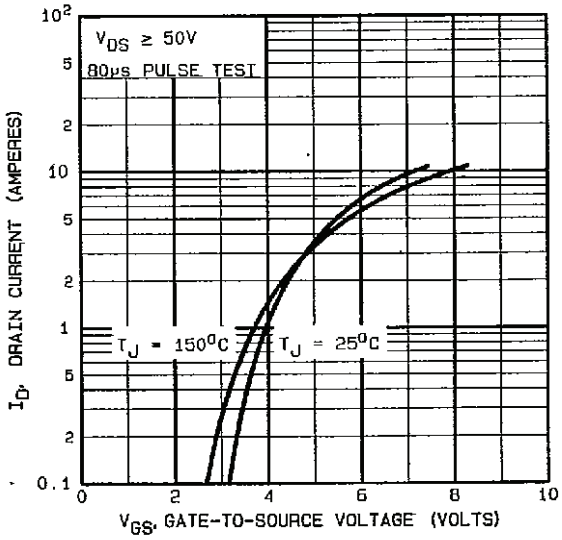

Fig. 2 - Typical Transfer Characteristics

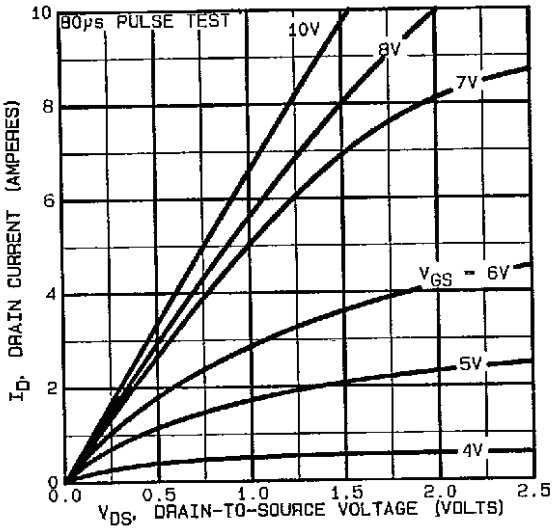

Fig. 1 - Typical Output Characteristics

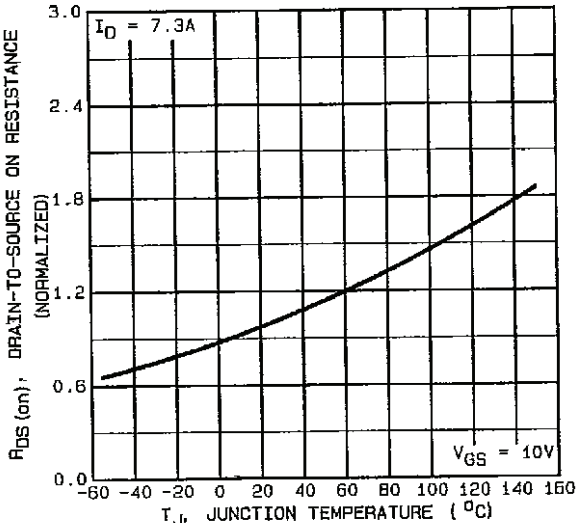

Fig. 3 - Normalized On-Resistance vs. Temperature

THIS DOCUMENT IS SUBJECT TO CHANGE WITHOUT NOTICE. THE PRODUCTS DESCRIBED HEREIN AND THIS DOCUMENT ARE SUBJECT TO SPECIFIC DISCLAIMERS, SET FORTH AT www.vishay.com/doc?91000

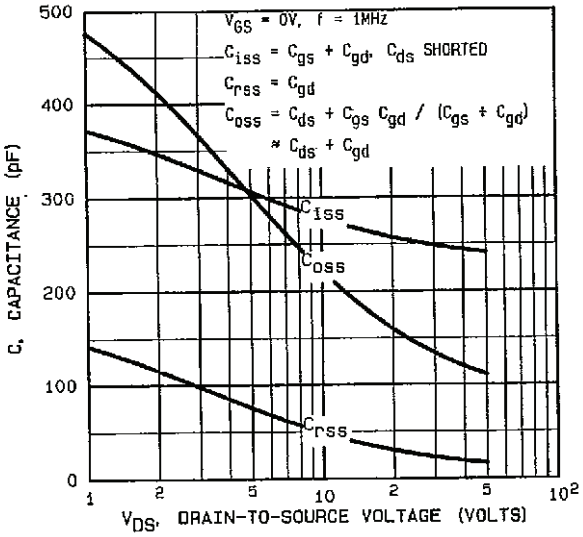

Fig. 4 - Typical Capacitance vs. Drain-to-Source Voltage

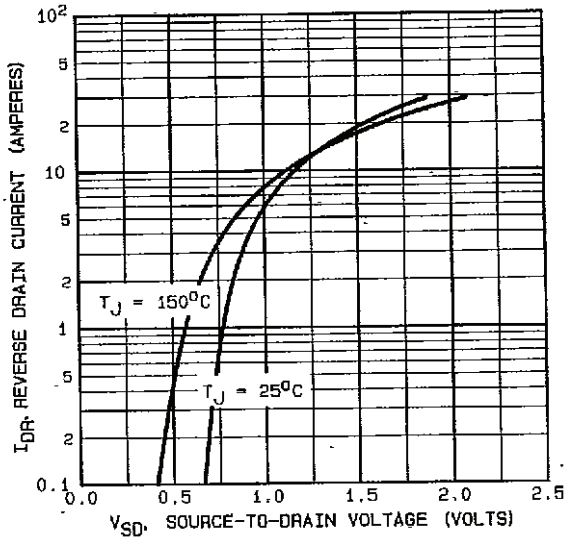

Fig. 6 - Typical Source-Drain Diode Forward Voltage

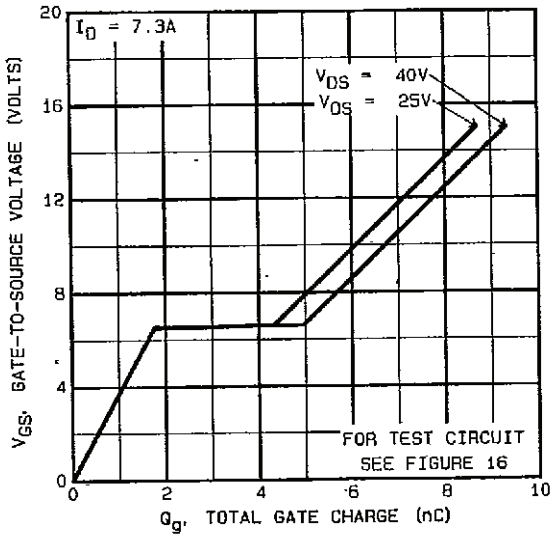

Fig. 5 - Typical Gate Charge vs. Gate-to-Source Voltage

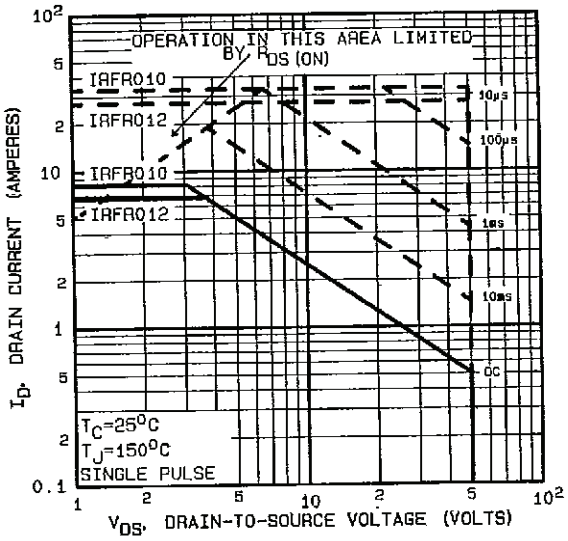

Fig. 7 - Maximum Safe Operating Area

For technical questions, contact: hvm@vishay.com
THIS DOCUMENT IS SUBJECT TO CHANGE WITHOUT NOTICE. THE PRODUCTS DESCRIBED HEREIN AND THIS DOCUMENT ARE SUBJECT TO SPECIFIC DISCLAIMERS, SET FORTH AT www.vishay.com/doc?91000

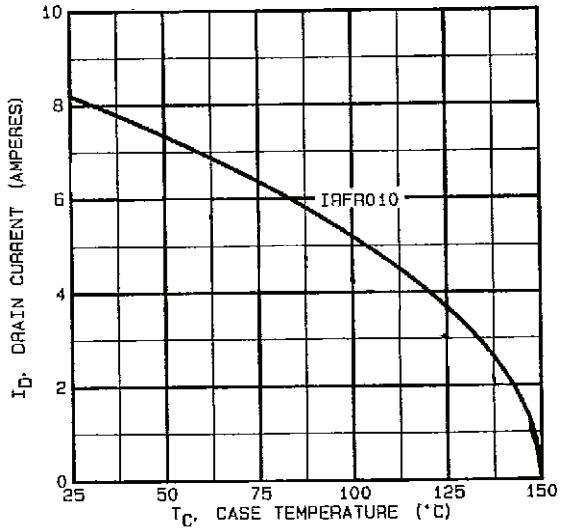

Fig. 8 - Maximum Drain Current vs. Case Temperature

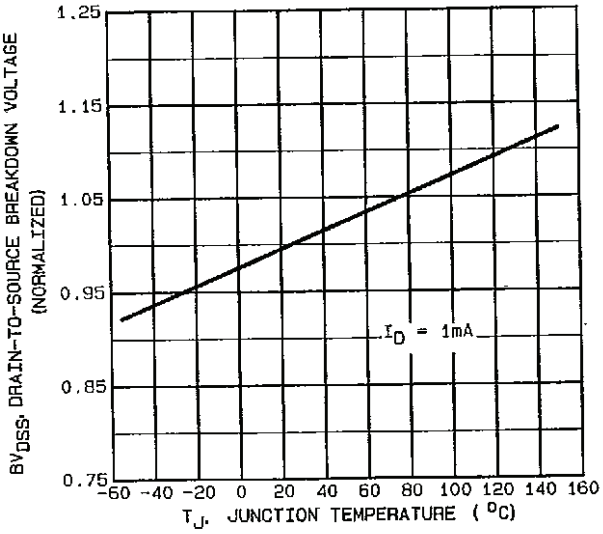

Fig. 9 - Breakdown Voltage vs. Temperature

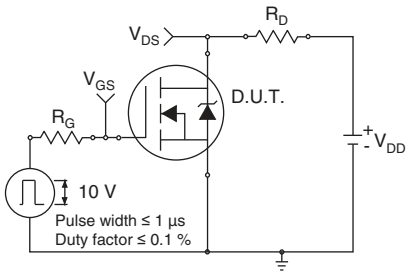

Fig. 10a - Switching Time Test Circuit

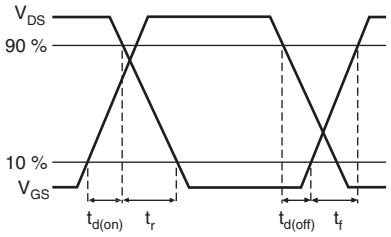

Fig. 10b - Switching Time Waveforms

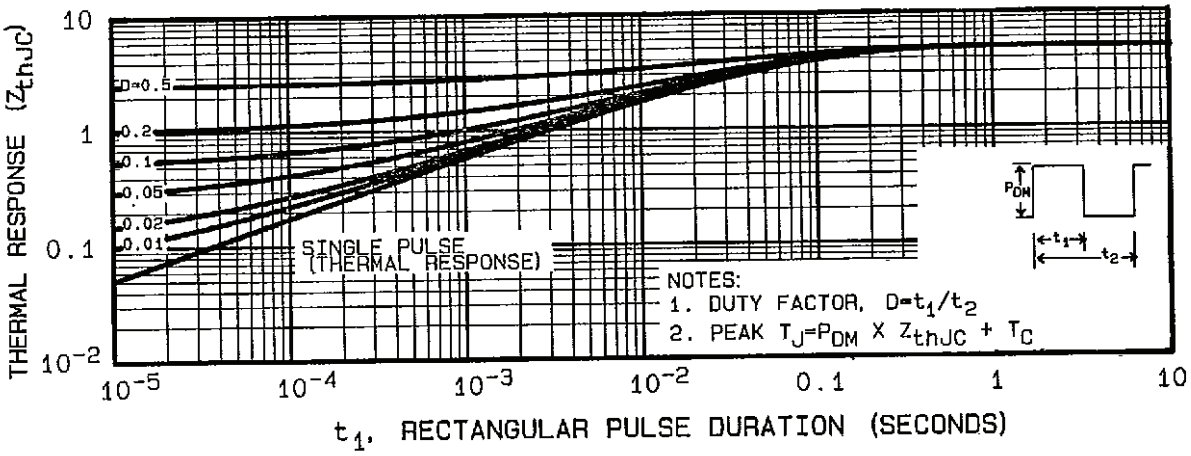

Fig. 10 - Maximum Effective Transient Thermal Impedance, Junction-to-Case

THIS DOCUMENT IS SUBJECT TO CHANGE WITHOUT NOTICE. THE PRODUCTS DESCRIBED HEREIN AND THIS DOCUMENT ARE SUBJECT TO SPECIFIC DISCLAIMERS, SET FORTH AT www.vishay.com/doc?91000

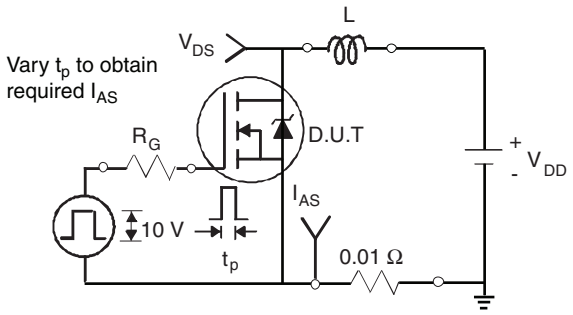

Fig. 12a - Unclamped Inductive Test Circuit

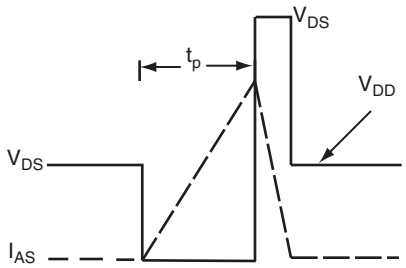

Fig. 12b - Unclamped Inductive Waveforms

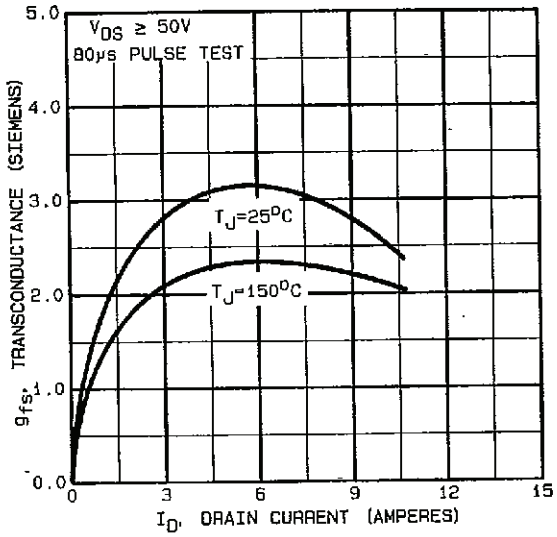

Fig. 12c - Typical Transconductance vs. Drain Current

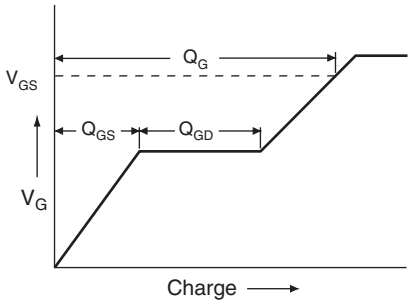

Fig. 13a - Basic Gate Charge Waveform

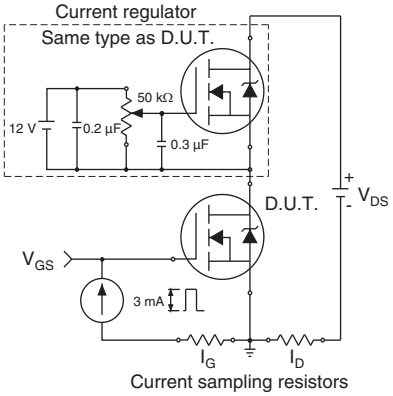

Fig. 13b - Gate Charge Test Circuit

THIS DOCUMENT IS SUBJECT TO CHANGE WITHOUT NOTICE. THE PRODUCTS DESCRIBED HEREIN AND THIS DOCUMENT ARE SUBJECT TO SPECIFIC DISCLAIMERS, SET FORTH AT www.vishay.com/doc?91000

Peak Diode Recovery dV/dt Test Circuit

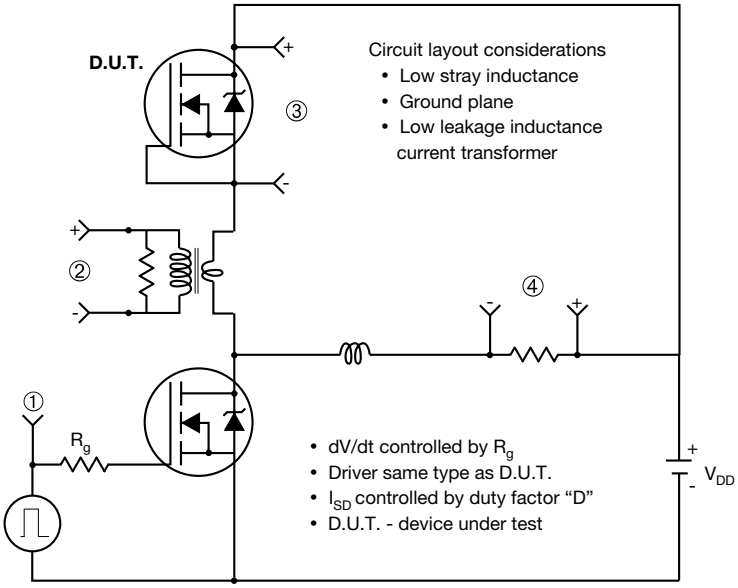

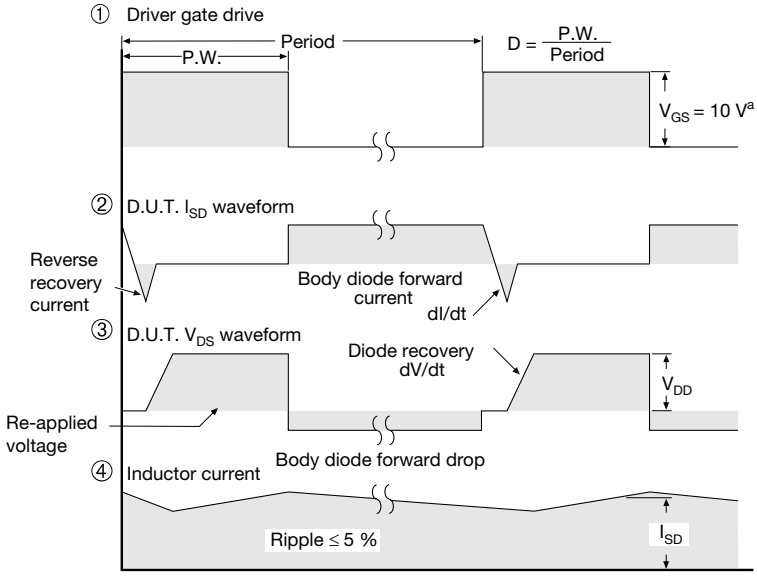

Note

a. V_{GS} = 5 V for logic level devices

Fig. 11 - For N-Channel

Vishay Siliconix maintains worldwide manufacturing capability. Products may be manufactured at one of several qualified locations. Reliability data for Silicon Technology and Package Reliability represent a composite of all qualified locations. For related documents such as package/tape drawings, part marking, and reliability data, see www.vishay.com/ppg?91420.

THIS DOCUMENT IS SUBJECT TO CHANGE WITHOUT NOTICE. THE PRODUCTS DESCRIBED HEREIN AND THIS DOCUMENT ARE SUBJECT TO SPECIFIC DISCLAIMERS, SET FORTH AT www.vishay.com/doc?91000

TO-252AA Case Outline

VERSION 1: FACILITY CODE = Y

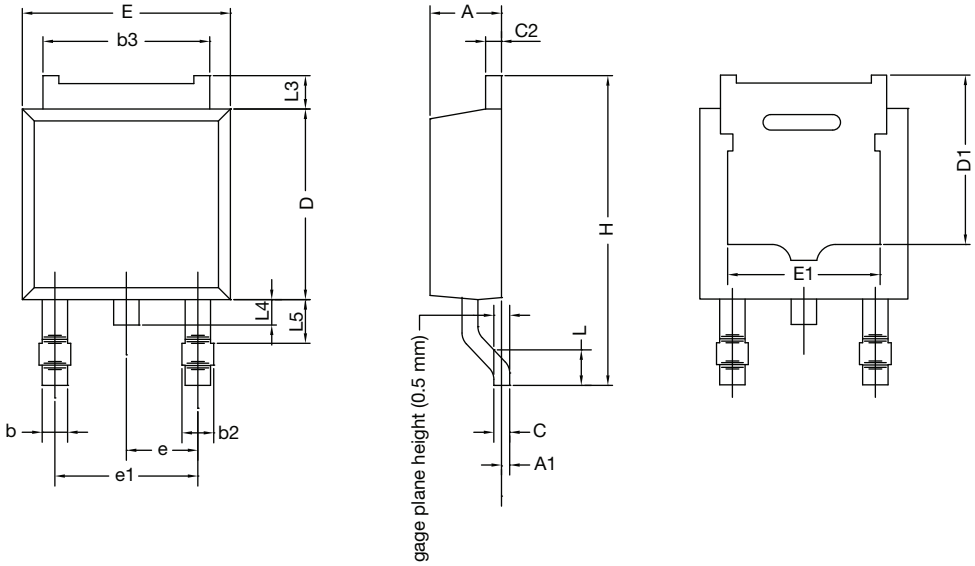

	MILLIMETERS	
DIM.	MIN.	MAX.
A	2.18	2.38
A1	-	0.127
b	0.64	0.88
b2	0.76	1.14
b3	4.95	5.46
C	0.46	0.61
C2	0.46	0.89
D	5.97	6.22
D1	4.10	-
E	6.35	6.73
E1	4.32	-
H	9.40	10.41
e	2.28 BSC	
e1	4.56 BSC	
L	1.40	1.78
L3	0.89	1.27
L4	-	1.02
L5	1.01	1.52

Note

- Dimension L3 is for reference only

For technical questions, contact: pmostechsupport@vishay.com

THIS DOCUMENT IS SUBJECT TO CHANGE WITHOUT NOTICE. THE PRODUCTS DESCRIBED HEREIN AND THIS DOCUMENT ARE SUBJECT TO SPECIFIC DISCLAIMERS, SET FORTH AT www.vishay.com/doc?91000

VERSION 2: FACILITY CODE = N

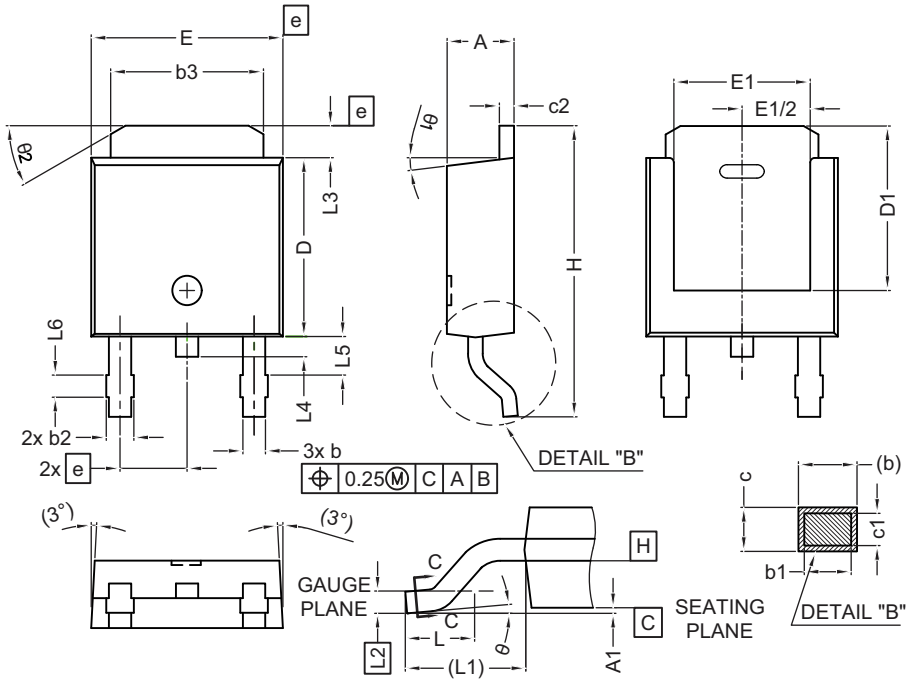

	MILLIMETERS	
DIM.	MIN.	MAX.
A	2.18	2.39
A1	-	0.13
b	0.65	0.89
b1	0.64	0.79
b2	0.76	1.13
b3	4.95	5.46
c	0.46	0.61
c1	0.41	0.56
c2	0.46	0.60
D	5.97	6.22
D1	5.21	-
E	6.35	6.73
E1	4.32	-
e	2.29 BSC	
H	9.94	10.34

	MILLIMETERS	
DIM.	MIN.	MAX.
L	1.50	1.78
L1	2.74 ref.	
L2	0.51 BSC	
L3	0.89	1.27
L4	-	1.02
L5	1.14	1.49
L6	0.65	0.85
θ	0°	10°
θ1	0°	15°
θ2	25°	35°

Notes

- Dimensioning and tolerance confirm to ASME Y14.5M-1994
- All dimensions are in millimeters. Angles are in degrees
- Heat sink side flash is max. 0.8 mm
- Radius on terminal is optional

ECN: E22-0399-Rev. R, 03-Oct-2022
DWG: 5347

For technical questions, contact: pmostechsupport@vishay.com

THIS DOCUMENT IS SUBJECT TO CHANGE WITHOUT NOTICE. THE PRODUCTS DESCRIBED HEREIN AND THIS DOCUMENT ARE SUBJECT TO SPECIFIC DISCLAIMERS, SET FORTH AT www.vishay.com/doc?91000

RECOMMENDED MINIMUM PADS FOR DPAK (TO-252)

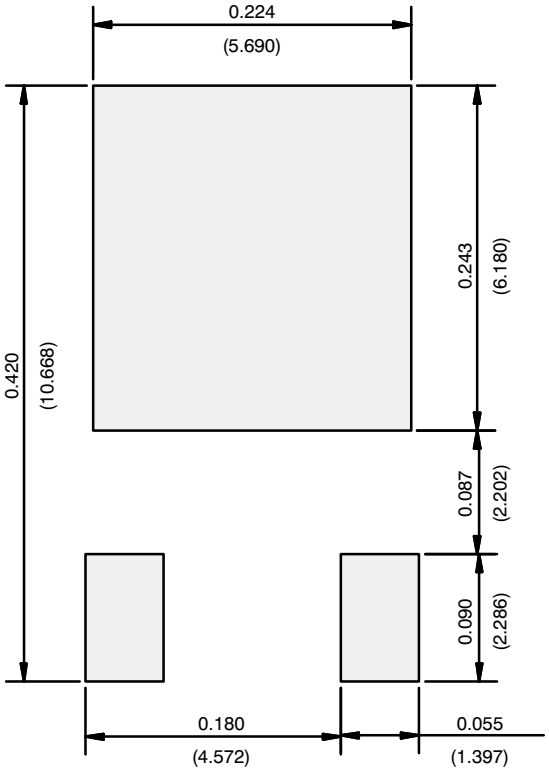

Recommended Minimum Pads
Dimensions in Inches/(mm)

Return to Index

Disclaimer

ALL PRODUCT, PRODUCT SPECIFICATIONS AND DATA ARE SUBJECT TO CHANGE WITHOUT NOTICE TO IMPROVE RELIABILITY, FUNCTION OR DESIGN OR OTHERWISE.

Vishay Intertechnology, Inc., its affiliates, agents, and employees, and all persons acting on its or their behalf (collectively, “Vishay”), disclaim any and all liability for any errors, inaccuracies or incompleteness contained in any datasheet or in any other disclosure relating to any product.

Vishay makes no warranty, representation or guarantee regarding the suitability of the products for any particular purpose or the continuing production of any product. To the maximum extent permitted by applicable law, Vishay disclaims (i) any and all liability arising out of the application or use of any product, (ii) any and all liability, including without limitation special, consequential or incidental damages, and (iii) any and all implied warranties, including warranties of fitness for particular purpose, non-infringement and merchantability.

Statements regarding the suitability of products for certain types of applications are based on Vishay's knowledge of typical requirements that are often placed on Vishay products in generic applications. Such statements are not binding statements about the suitability of products for a particular application. It is the customer's responsibility to validate that a particular product with the properties described in the product specification is suitable for use in a particular application. Parameters provided in datasheets and / or specifications may vary in different applications and performance may vary over time. All operating parameters, including typical parameters, must be validated for each customer application by the customer's technical experts. Product specifications do not expand or otherwise modify Vishay's terms and conditions of purchase, including but not limited to the warranty expressed therein.

Hyperlinks included in this datasheet may direct users to third-party websites. These links are provided as a convenience and for informational purposes only. Inclusion of these hyperlinks does not constitute an endorsement or an approval by Vishay of any of the products, services or opinions of the corporation, organization or individual associated with the third-party website. Vishay disclaims any and all liability and bears no responsibility for the accuracy, legality or content of the third-party website or for that of subsequent links.

Except as expressly indicated in writing, Vishay products are not designed for use in medical, life-saving, or life-sustaining applications or for any other application in which the failure of the Vishay product could result in personal injury or death. Customers using or selling Vishay products not expressly indicated for use in such applications do so at their own risk. Please contact authorized Vishay personnel to obtain written terms and conditions regarding products designed for such applications.

No license, express or implied, by estoppel or otherwise, to any intellectual property rights is granted by this document or by any conduct of Vishay. Product names and markings noted herein may be trademarks of their respective owners.

© 2023 VISHAY INTERTECHNOLOGY, INC. ALL RIGHTS RESERVED