# Power MOSFET

Super-247

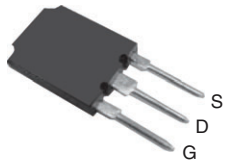


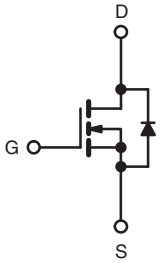


N-Channel MOSFET

## FEATURES

- Low Gate Charge $Q_g$ Results in Simple Drive Requirement
- Improved Gate, Avalanche and Dynamic dV/dt Ruggedness
- Fully Characterized Capacitance and Avalanche Voltage and Current
- Low $R_{DS(on)}$
- Material categorization: for definitions of compliance please see www.vishay.com/doc?99912

Pb-free
RoHS COMPLIANT
HALOGEN FREE

| PRODUCT SUMMARY | | |
|---|---|---|
| $V_{DS}$ (V) | 500 | |
| $R_{DS(on)}$ (Ω) | $V_{GS}$ = 10 V | 0.078 |
| $Q_g$ (Max.) (nC) | 350 | |
| $Q_{gs}$ (nC) | 85 | |
| $Q_{gd}$ (nC) | 180 | |
| Configuration | Single | |

## APPLICATIONS

- Switch mode power supply (SMPS)
- Uninterruptible power supply
- High speed power switching
- Hard switched and high frequency circuits

| ORDERING INFORMATION | |
|---|---|
| Package | Super-247 |
| Lead (Pb)-free and halogen-free | SiHFPS43N50K-GE3 |

**ABSOLUTE MAXIMUM RATINGS** ($T_C$ = 25 °C, unless otherwise noted)

| PARAMETER | | | SYMBOL | LIMIT | UNIT |
|---|---|---|---|---|---|
| Drain-source voltage | | | $V_{DS}$ | 500 | V |
| Gate-source voltage | | | $V_{GS}$ | ± 30 | |
| Continuous drain current | $V_{GS}$ at 10 V | $T_C$ = 25 °C | $I_D$ | 47 | A |
| | | $T_C$ = 100 °C | | 29 | |
| Pulsed drain current [a] | | | $I_{DM}$ | 190 | |
| Linear derating factor | | | | 4.3 | W/°C |
| Single pulse avalanche energy [b] | | | $E_{AS}$ | 910 | mJ |
| Repetitive avalanche current [a] | | | $I_{AR}$ | 47 | A |
| Repetitive avalanche energy [a] | | | $E_{AR}$ | 54 | mJ |
| Maximum power dissipation | $T_C$ = 25 °C | | $P_D$ | 540 | W |
| Peak diode recovery dV/dt [c] | | | dV/dt | 9.0 | V/ns |
| Operating junction and storage temperature range | | | $T_J$, $T_{stg}$ | - 55 to + 150 | °C |
| Soldering recommendations (peak temperature) | for 10 s | | | 300 [d] | |

**Notes**

a. Repetitive rating; pulse width limited by maximum junction temperature (see fig. 11)
b. Starting $T_J$ = 25 °C, L = 0.82 mH, $R_g$ = 25 Ω, $I_{AS}$ = 47 A (see fig. 12c)
c. $I_{SD} \leq$ 47 A, dI/dt $\leq$ 230 A/μs, $V_{DD} \leq V_{DS}$, $T_J \leq$ 150 °C
d. 1.6 mm from case


For technical questions, contact: hvm@vishay.com
THIS DOCUMENT IS SUBJECT TO CHANGE WITHOUT NOTICE. THE PRODUCTS DESCRIBED HEREIN AND THIS DOCUMENT ARE SUBJECT TO SPECIFIC DISCLAIMERS, SET FORTH AT www.vishay.com/doc?91000

| THERMAL RESISTANCE RATINGS | | | | |
|---|---|---|---|---|
| **PARAMETER** | **SYMBOL** | **TYP.** | **MAX.** | **UNIT** |
| Maximum junction-to-ambient | $R_{thJA}$ | - | 40 | °C/W |
| Case-to-sink, flat, greased surface | $R_{thCS}$ | 0.24 | - | |
| Maximum junction-to-case (drain) | $R_{thJC}$ | - | 0.23 | |

| SPECIFICATIONS ($T_J$ = 25 °C, unless otherwise noted) | | | | | | | |
|---|---|---|---|---|---|---|---|
| **PARAMETER** | **SYMBOL** | **TEST CONDITIONS** | | **MIN.** | **TYP.** | **MAX.** | **UNIT** |
| **Static** | | | | | | | |
| Drain-source breakdown voltage | $V_{DS}$ | $V_{GS}$ = 0 V, $I_D$ = 250 μA | | 500 | - | - | V |
| $V_{DS}$ temperature coefficient | $\Delta V_{DS}/T_J$ | Reference to 25 °C, $I_D$ = 1 mA | | - | 0.60 | - | V/°C |
| Gate-source threshold voltage | $V_{GS(th)}$ | $V_{DS}$ = $V_{GS}$, $I_D$ = 250 μA | | 3.0 | - | 5.0 | V |
| Gate-source leakage | $I_{GSS}$ | $V_{GS}$ = ± 30 V | | - | - | ± 100 | nA |
| Zero gate voltage drain current | $I_{DSS}$ | $V_{DS}$ = 500 V, $V_{GS}$ = 0 V | | - | - | 50 | μA |
| | | $V_{DS}$ = 400 V, $V_{GS}$ = 0 V, $T_J$ = 125 °C | | - | - | 250 | |
| Drain-source on-state resistance | $R_{DS(on)}$ | $V_{GS}$ = 10 V | $I_D$ = 28 A [b] | - | 0.078 | 0.090 | Ω |
| Forward transconductance | $g_{fs}$ | $V_{DS}$ = 50 V, $I_D$ = 28 A | | 23 | - | - | S |
| **Dynamic** | | | | | | | |
| Input capacitance | $C_{iss}$ | $V_{GS}$ = 0 V, $V_{DS}$ = 25 V, f = 1.0 MHz, see fig. 5 | | - | 8310 | - | pF |
| Output capacitance | $C_{oss}$ | | | - | 960 | - | |
| Reverse transfer capacitance | $C_{rss}$ | | | - | 120 | - | |
| Output capacitance | $C_{oss}$ | $V_{GS}$ = 0 V | $V_{DS}$ = 1.0 V, f = 1.0 MHz | - | 10170 | - | |
| | | | $V_{DS}$ = 400 V, f = 1.0 MHz | - | 240 | - | |
| Effective output capacitance | $C_{oss}$ eff. | | $V_{DS}$ = 0 V to 400 V [c] | - | 440 | - | |
| Total gate charge | $Q_g$ | $V_{GS}$ = 10 V | $I_D$ = 47 A, $V_{DS}$ = 400 V, see fig. 6 and 13 [b] | - | - | 350 | nC |
| Gate-source charge | $Q_{gs}$ | | | - | - | 85 | |
| Gate-drain charge | $Q_{gd}$ | | | - | - | 180 | |
| Turn-on delay time | $t_{d(on)}$ | | $V_{DD}$ = 250 V, $I_D$ = 47 A, $R_G$ = 1.0 Ω, see fig. 10 [b] | - | 25 | - | ns |
| Rise time | $t_r$ | | | - | 140 | - | |
| Turn-off delay time | $t_{d(off)}$ | | | - | 55 | - | |
| Fall time | $t_f$ | | | - | 74 | - | |
| **Drain-source body diode characteristics** | | | | | | | |
| Continuous source-drain diode current | $I_S$ | MOSFET symbol showing the integral reverse p - n junction diode | | - | - | 47 | A |
| Pulsed diode forward current [a] | $I_{SM}$ | | | - | - | 190 | |
| Body diode voltage | $V_{SD}$ | $T_J$ = 25 °C, $I_S$ = 47 A, $V_{GS}$ = 0 V [b] | | - | - | 1.5 | V |
| Body diode reverse recovery time | $t_{rr}$ | $T_J$ = 25 °C, $I_F$ = 47 A, dI/dt = 100 A/μs [b] | | - | 620 | 940 | ns |
| Body diode reverse recovery charge | $Q_{rr}$ | | | - | 14 | 21 | μC |
| Body diode recovery current | $I_{RRM}$ | | | - | 38 | - | A |
| Forward turn-on time | $t_{on}$ | Intrinsic turn-on time is negligible (turn-on is dominated by $L_S$ and $L_D$) | | | | | |

**Notes**

a. Repetitive rating; pulse width limited by maximum junction temperature (see fig. 11)
b. Pulse width ≤ 400 μs; duty cycle ≤ 2 %
c. $C_{oss}$ eff. is a fixed capacitance that gives the same charging time as $C_{oss}$ while $V_{DS}$ is rising from 0 % to 80 % $V_{DS}$


THIS DOCUMENT IS SUBJECT TO CHANGE WITHOUT NOTICE. THE PRODUCTS DESCRIBED HEREIN AND THIS DOCUMENT ARE SUBJECT TO SPECIFIC DISCLAIMERS, SET FORTH AT www.vishay.com/doc?91000

**TYPICAL CHARACTERISTICS** (25 °C, unless otherwise noted)

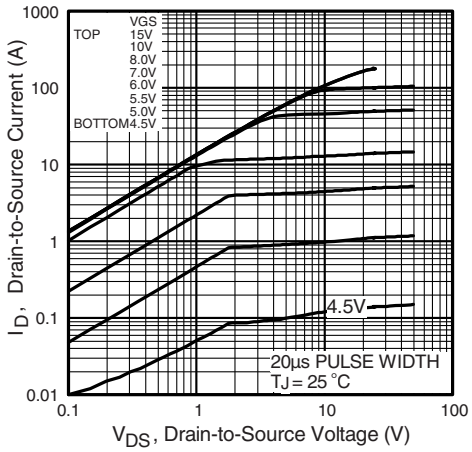


**Fig. 1 - Typical Output Characteristics**

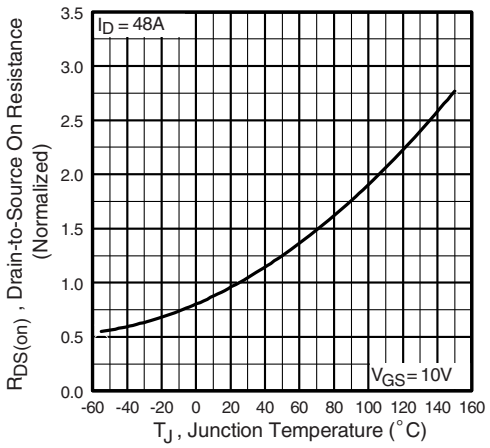


**Fig. 4 - Normalized On-Resistance vs. Temperature**

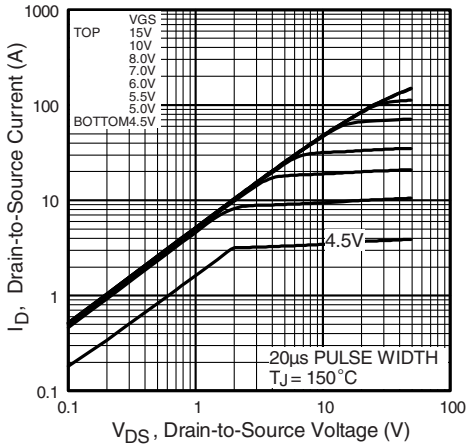


**Fig. 2 - Typical Output Characteristics**

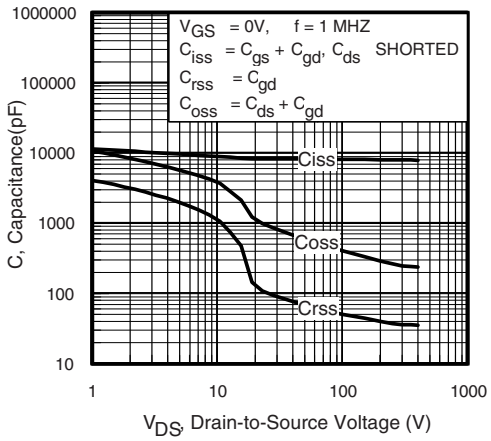


**Fig. 5 - Typical Capacitance vs. Drain-to-Source Voltage**

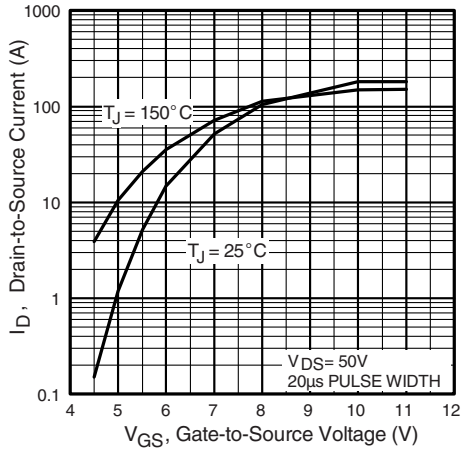


**Fig. 3 - Typical Transfer Characteristics**

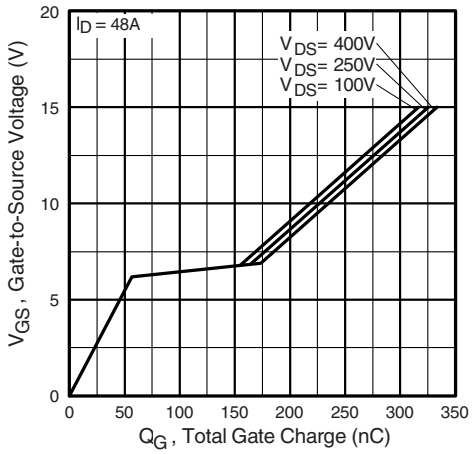


**Fig. 6 - Typical Gate Charge vs. Gate-to-Source Voltage**


THIS DOCUMENT IS SUBJECT TO CHANGE WITHOUT NOTICE. THE PRODUCTS DESCRIBED HEREIN AND THIS DOCUMENT ARE SUBJECT TO SPECIFIC DISCLAIMERS, SET FORTH AT www.vishay.com/doc?91000

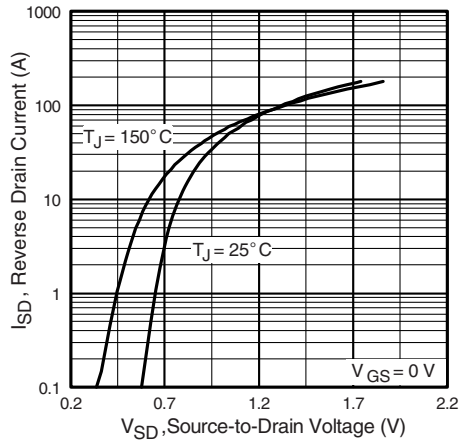


**Fig. 7 - Typical Source-Drain Diode Forward Voltage**

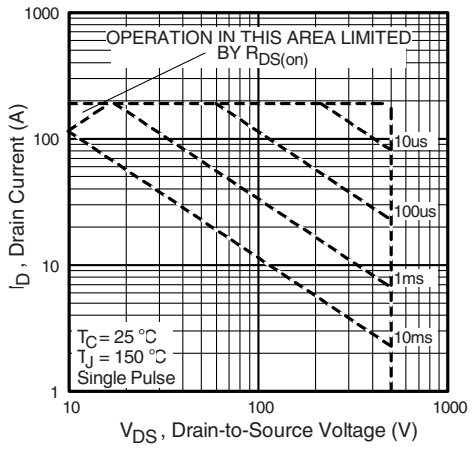


**Fig. 8 - Maximum Safe Operating Area**

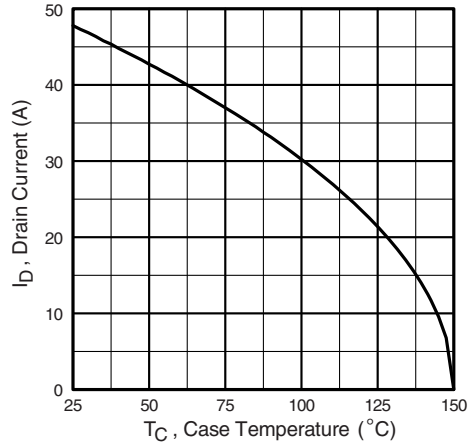


**Fig. 9 - Maximum Drain Current vs. Case Temperature**

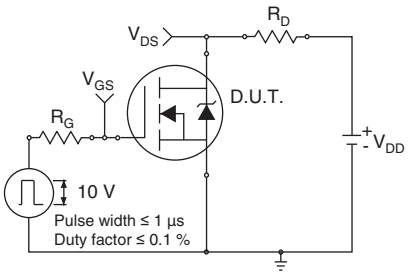


**Fig. 10a - Switching Time Test Circuit**

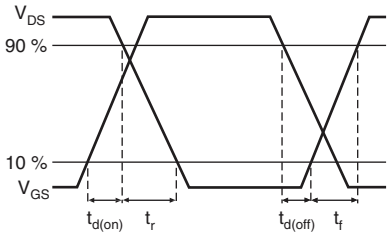


**Fig. 10b - Switching Time Waveforms**


For technical questions, contact: hvm@vishay.com
THIS DOCUMENT IS SUBJECT TO CHANGE WITHOUT NOTICE. THE PRODUCTS DESCRIBED HEREIN AND THIS DOCUMENT ARE SUBJECT TO SPECIFIC DISCLAIMERS, SET FORTH AT www.vishay.com/doc?91000

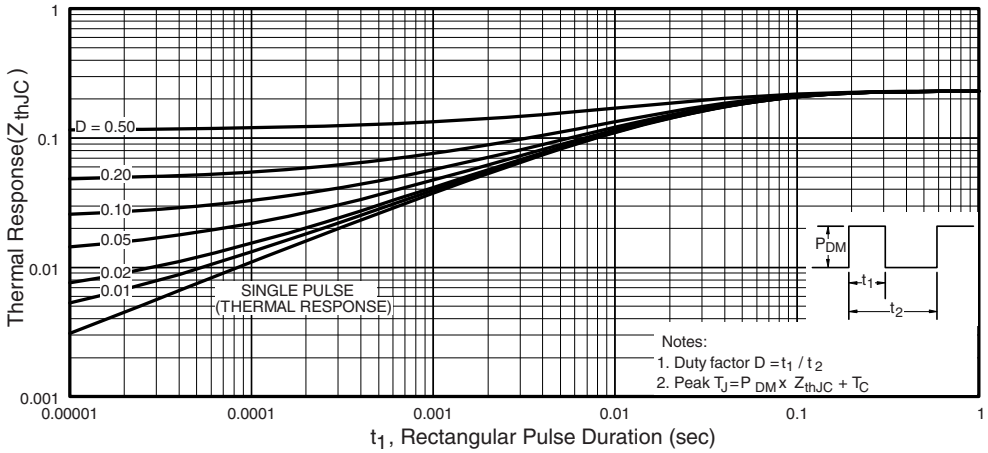


**Fig. 11 - Maximum Effective Transient Thermal Impedance, Junction-to-Case**

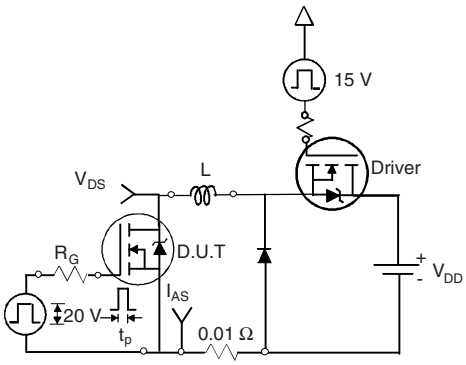


**Fig. 12a - Unclamped Inductive Test Circuit**

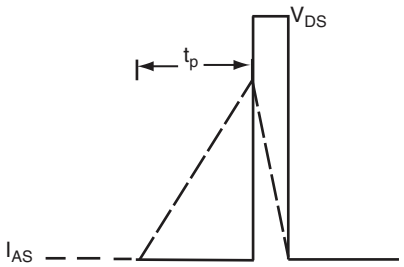


**Fig. 12b - Unclamped Inductive Waveforms**

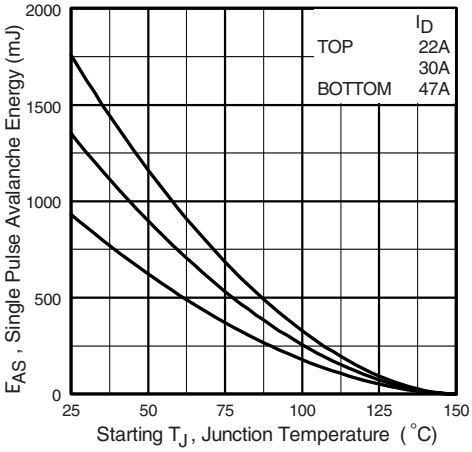


**Fig. 12c - Maximum Avalanche Energy vs. Drain Current**


For technical questions, contact: hvm@vishay.com
THIS DOCUMENT IS SUBJECT TO CHANGE WITHOUT NOTICE. THE PRODUCTS DESCRIBED HEREIN AND THIS DOCUMENT ARE SUBJECT TO SPECIFIC DISCLAIMERS, SET FORTH AT www.vishay.com/doc?91000

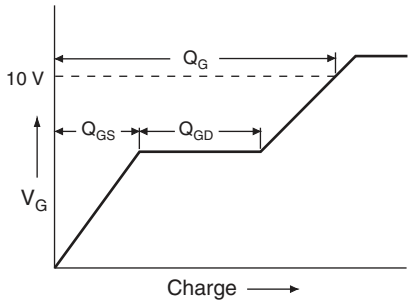


**Fig. 13a - Basic Gate Charge Waveform**

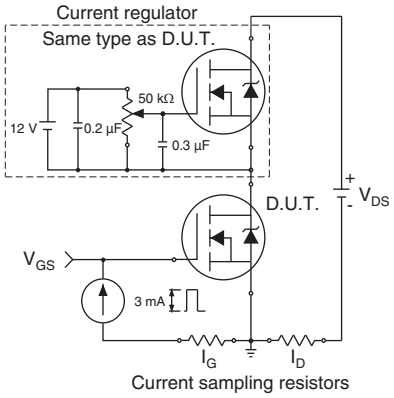


**Fig. 13b - Gate Charge Test Circuit**


For technical questions, contact: hvm@vishay.com
THIS DOCUMENT IS SUBJECT TO CHANGE WITHOUT NOTICE. THE PRODUCTS DESCRIBED HEREIN AND THIS DOCUMENT ARE SUBJECT TO SPECIFIC DISCLAIMERS, SET FORTH AT www.vishay.com/doc?91000

**Peak Diode Recovery dV/dt Test Circuit**

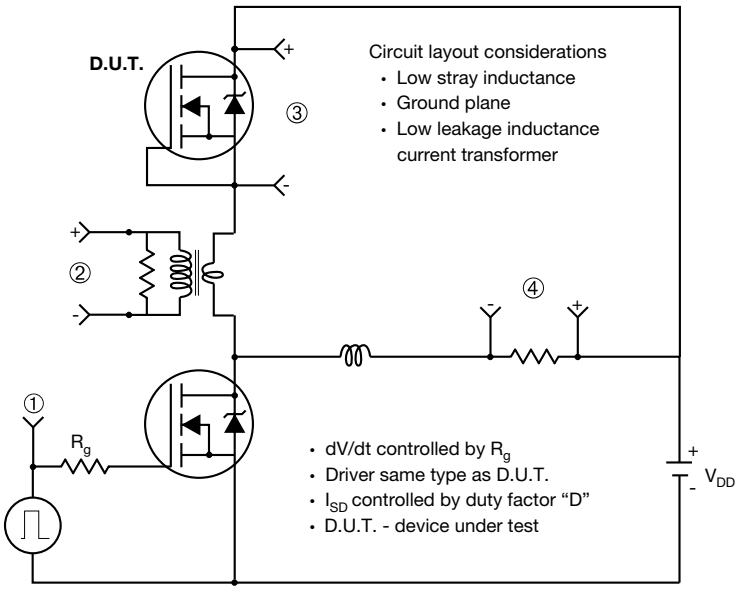


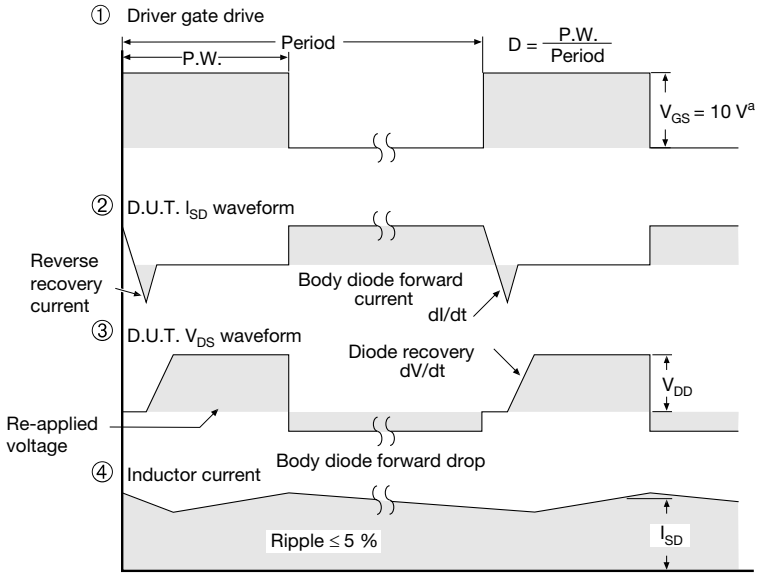


**Note**

a. $V_{GS}$ = 5 V for logic level devices

**Fig. 14 - For N-Channel**

*Vishay Siliconix maintains worldwide manufacturing capability. Products may be manufactured at one of several qualified locations. Reliability data for Silicon Technology and Package Reliability represent a composite of all qualified locations. For related documents such as package/tape drawings, part marking, and reliability data, see www.vishay.com/ppg?91262.*


THIS DOCUMENT IS SUBJECT TO CHANGE WITHOUT NOTICE. THE PRODUCTS DESCRIBED HEREIN AND THIS DOCUMENT ARE SUBJECT TO SPECIFIC DISCLAIMERS, SET FORTH AT www.vishay.com/doc?91000

# TO-274AA (High Voltage)

## VERSION 1: FACILITY CODE = Y

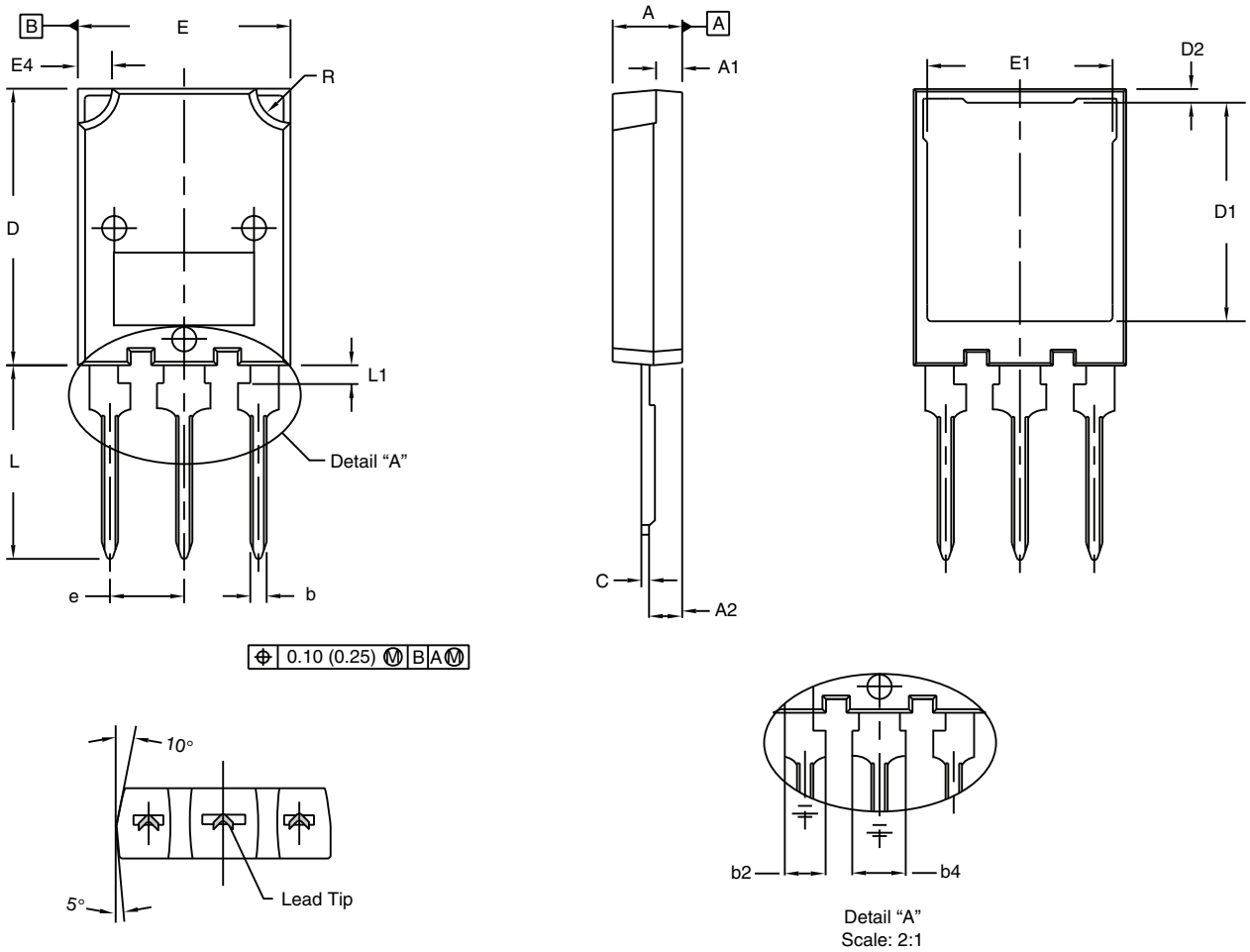


| | MILLIMETERS | | INCHES | |
|---|---|---|---|---|
| DIM. | MIN. | MAX. | MIN. | MAX. |
| A | 4.70 | 5.30 | 0.185 | 0.209 |
| A1 | 1.50 | 2.50 | 0.059 | 0.098 |
| A2 | 2.25 | 2.65 | 0.089 | 0.104 |
| b | 1.30 | 1.60 | 0.051 | 0.063 |
| b2 | 1.80 | 2.20 | 0.071 | 0.087 |
| b4 | 3.00 | 3.25 | 0.118 | 0.128 |
| c (1) | 0.38 | 0.89 | 0.015 | 0.035 |
| D | 19.80 | 20.80 | 0.780 | 0.819 |

| | MILLIMETERS | | INCHES | |
|---|---|---|---|---|
| DIM. | MIN. | MAX. | MIN. | MAX. |
| D1 | 15.50 | 16.10 | 0.610 | 0.634 |
| D2 | 0.70 | 1.30 | 0.028 | 0.051 |
| E | 15.10 | 16.10 | 0.594 | 0.634 |
| E1 | 13.30 | 13.90 | 0.524 | 0.547 |
| e | 5.45 BSC | | 0.215 BSC | |
| L | 13.70 | 14.70 | 0.539 | 0.579 |
| L1 | 1.00 | 1.60 | 0.039 | 0.063 |
| R | 2.00 | 3.00 | 0.079 | 0.118 |

**Notes**

- Dimensioning and tolerancing per ASME Y14.5M-1994
- Dimension D and E do not include mold flash. Mold flash shall not exceed 0.127 mm (0.005") per side. These dimensions are measured at the outer extremes of the plastic body
- Outline conforms to JEDEC® outline to TO-274AA

(1) Dimension measured at tip of lead



For technical questions, contact: hvm@vishay.com

THIS DOCUMENT IS SUBJECT TO CHANGE WITHOUT NOTICE. THE PRODUCTS DESCRIBED HEREIN AND THIS DOCUMENT ARE SUBJECT TO SPECIFIC DISCLAIMERS, SET FORTH AT www.vishay.com/doc?91000

**VERSION 2: FACILITY CODE = N**

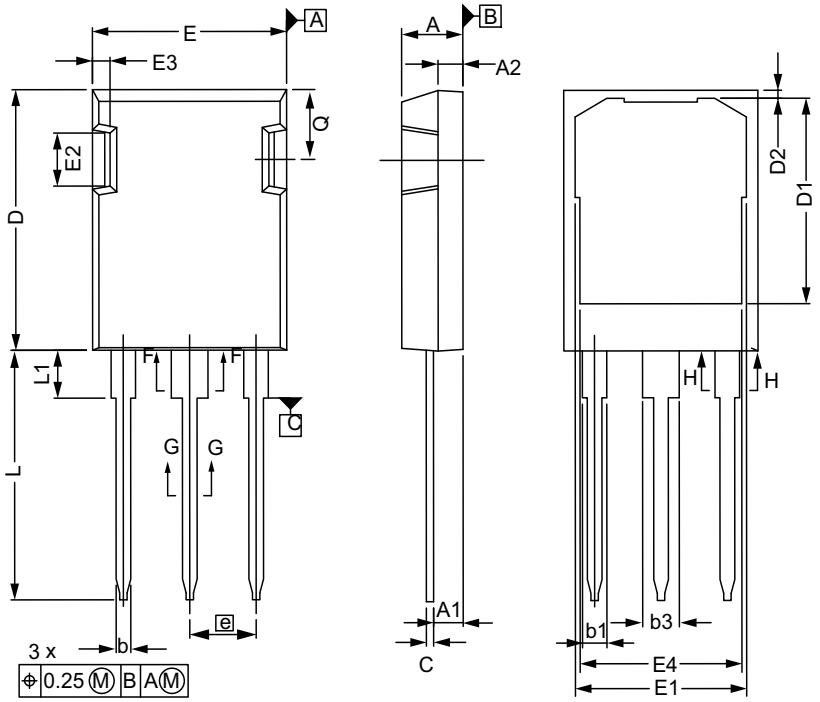


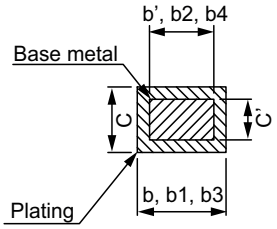


SECTION "F-F", "G-G" AND "H-H"
SCALE: NONE

| | MILLIMETERS | |
|---|---|---|
| DIM. | MIN. | MAX. |
| A | 4.83 | 5.21 |
| A1 | 2.29 | 2.54 |
| A2 | 1.91 | 2.16 |
| b' | 1.07 | 1.28 |
| b | 1.07 | 1.33 |
| b1 | 1.91 | 2.41 |
| b2 | 1.91 | 2.16 |
| b3 | 2.87 | 3.38 |
| b4 | 2.87 | 3.13 |
| c' | 0.55 | 0.65 |
| c | 0.55 | 0.68 |
| D | 20.80 | 21.10 |

| | MILLIMETERS | |
|---|---|---|
| DIM. | MIN. | MAX. |
| D1 | 16.25 | 17.65 |
| D2 | 0.50 | 0.80 |
| E | 15.75 | 16.13 |
| E1 | 13.10 | 14.15 |
| E2 | 3.68 | 5.10 |
| E3 | 1.00 | 1.90 |
| E4 | 12.38 | 13.43 |
| e | 5.44 BSC | |
| N | 3 | |
| L | 19.81 | 20.32 |
| L1 | 3.70 | 4.00 |
| Q | 5.49 | 6.00 |

ECN: E20-0538-Rev. C, 19-Oct-2020
DWG: 5975

**Notes**

- Dimensioning and tolerancing per ASME Y14.5M-1994
- Outline conforms to JEDEC® outline to TO-274AD
- Dimensions are measured in mm, angles are in degree
- Metal surfaces are tin plated, except area of cut



For technical questions, contact: hvm@vishay.com
THIS DOCUMENT IS SUBJECT TO CHANGE WITHOUT NOTICE. THE PRODUCTS DESCRIBED HEREIN AND THIS DOCUMENT ARE SUBJECT TO SPECIFIC DISCLAIMERS, SET FORTH AT www.vishay.com/doc?91000

# Disclaimer

ALL PRODUCT, PRODUCT SPECIFICATIONS AND DATA ARE SUBJECT TO CHANGE WITHOUT NOTICE TO IMPROVE RELIABILITY, FUNCTION OR DESIGN OR OTHERWISE.

Vishay Intertechnology, Inc., its affiliates, agents, and employees, and all persons acting on its or their behalf (collectively, “Vishay”), disclaim any and all liability for any errors, inaccuracies or incompleteness contained in any datasheet or in any other disclosure relating to any product.

Vishay makes no warranty, representation or guarantee regarding the suitability of the products for any particular purpose or the continuing production of any product. To the maximum extent permitted by applicable law, Vishay disclaims (i) any and all liability arising out of the application or use of any product, (ii) any and all liability, including without limitation special, consequential or incidental damages, and (iii) any and all implied warranties, including warranties of fitness for particular purpose, non-infringement and merchantability.

Statements regarding the suitability of products for certain types of applications are based on Vishay's knowledge of typical requirements that are often placed on Vishay products in generic applications. Such statements are not binding statements about the suitability of products for a particular application. It is the customer's responsibility to validate that a particular product with the properties described in the product specification is suitable for use in a particular application. Parameters provided in datasheets and / or specifications may vary in different applications and performance may vary over time. All operating parameters, including typical parameters, must be validated for each customer application by the customer's technical experts. Product specifications do not expand or otherwise modify Vishay's terms and conditions of purchase, including but not limited to the warranty expressed therein.

Hyperlinks included in this datasheet may direct users to third-party websites. These links are provided as a convenience and for informational purposes only. Inclusion of these hyperlinks does not constitute an endorsement or an approval by Vishay of any of the products, services or opinions of the corporation, organization or individual associated with the third-party website. Vishay disclaims any and all liability and bears no responsibility for the accuracy, legality or content of the third-party website or for that of subsequent links.

Except as expressly indicated in writing, Vishay products are not designed for use in medical, life-saving, or life-sustaining applications or for any other application in which the failure of the Vishay product could result in personal injury or death. Customers using or selling Vishay products not expressly indicated for use in such applications do so at their own risk. Please contact authorized Vishay personnel to obtain written terms and conditions regarding products designed for such applications.

No license, express or implied, by estoppel or otherwise, to any intellectual property rights is granted by this document or by any conduct of Vishay. Product names and markings noted herein may be trademarks of their respective owners.

***© 2023 VISHAY INTERTECHNOLOGY, INC. ALL RIGHTS RESERVED***