Power MOSFET

I²PAK (TO-262) D²PAK (TO-263)

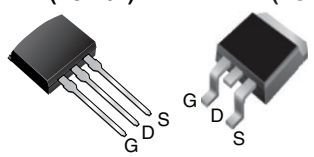

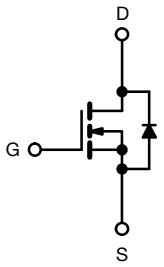

N-Channel MOSFET

PRODUCT SUMMARY		
V_{DS} (V)	500	
$R_{DS(on)}$ (Ω)	V_{GS} = 10 V	0.85
Q_g max. (nC)	38	
Q_{gs} (nC)	9.0	
Q_{gd} (nC)	18	
Configuration	Single	

FEATURES

- Low gate charge Q_g results in simple drive requirement
- Improved gate, avalanche, and dynamic dV/dt ruggedness
- Fully characterized capacitance and avalanche voltage and current
- Effective C_{oss} specified
- Material categorization: for definitions of compliance please see www.vishay.com/doc?99912

RoHS* Available
HALOGEN FREE Available

Note

* This datasheet provides information about parts that are RoHS-compliant and / or parts that are non RoHS-compliant. For example, parts with lead (Pb) terminations are not RoHS-compliant. Please see the information / tables in this datasheet for details

APPLICATIONS

- Switch mode power supply (SMPS)
- Uninterruptible power supply
- High speed power switching

TYPICAL SMPS TOPOLOGIES

- Two transistor forward
- Half bridge
- Full bridge

ORDERING INFORMATION				
Package	D²PAK (TO-263)	D²PAK (TO-263)	D²PAK (TO-263)	I²PAK (TO-262)
Lead (Pb)-free and Halogen-free	SiHF840AS-GE3	SiHF840ASTRL-GE3 [a]	SiHF840ASTRR-GE3 [a]	SiHF840AL-GE3 [a]
Lead (Pb)-free	IRF840ASPbF	IRF840ASTRLPbF [a]	IRF840ASTRRPbF [a]	IRF840ALPbF

Note

a. See device orientation

ABSOLUTE MAXIMUM RATINGS (T_C = 25 °C, unless otherwise noted)					
PARAMETER			SYMBOL	LIMIT	UNIT
Drain-Source Voltage			V_{DS}	500	V
Gate-Source Voltage			V_{GS}	± 30	
Continuous Drain Current	V_{GS} at 10 V	T_C = 25 °C	I_D	8.0	A
		T_C = 100 °C		5.1	
Pulsed Drain Current [a]			I_{DM}	32	
Linear Derating Factor				1.0	W/°C
Single Pulse Avalanche Energy [b]			E_{AS}	510	mJ
Repetitive Avalanche Current [a]			I_{AR}	8.0	A
Repetitive Avalanche Energy [a]			E_{AR}	13	mJ
Maximum Power Dissipation	T_C = 25 °C		P_D	125	W
	T_A = 25 °C			3.1	
Peak Diode Recovery dV/dt [c, e]			dV/dt	5.0	V/ns
Operating Junction and Storage Temperature Range			T_J, T_{stg}	-55 to +150	°C
Soldering Temperature [d]	for 10 s			300	

Notes

a. Repetitive rating; pulse width limited by maximum junction temperature (see fig. 11)
b. Starting T_J = 25 °C, L = 16 mH, R_g = 25 Ω, I_{AS} = 8.0 A (see fig. 12)
c. $I_{SD} \leq$ 8.0 A, dI/dt ≤ 100 A/μs, $V_{DD} \leq V_{DS}$, $T_J \leq$ 150 °C
d. 1.6 mm from case
e. Uses IRF840A, SiH840A data and test conditions

THIS DOCUMENT IS SUBJECT TO CHANGE WITHOUT NOTICE. THE PRODUCTS DESCRIBED HEREIN AND THIS DOCUMENT ARE SUBJECT TO SPECIFIC DISCLAIMERS, SET FORTH AT www.vishay.com/doc?91000

THERMAL RESISTANCE RATINGS					
PARAMETER	**SYMBOL**	**MIN.**	**TYP.**	**MAX.**	**UNIT**
Maximum Junction-to-Ambient (PCB mount)[a]	R_{thJA}	-	-	40	°C/W
Maximum Junction-to-Case (Drain)	R_{thJC}	-	-	1.0	

Note

a. When mounted on 1" square PCB (FR-4 or G-10 material)

SPECIFICATIONS (T_J = 25 °C, unless otherwise noted)							
PARAMETER	**SYMBOL**	**TEST CONDITIONS**		**MIN.**	**TYP.**	**MAX.**	**UNIT**
Static							
Drain-Source Breakdown Voltage	V_{DS}	V_{GS} = 0, I_D = 250 μA		500	-	-	V
V_{DS} Temperature Coefficient	$\Delta V_{DS}/T_J$	Reference to 25 °C, I_D = 1 mA [d]		-	0.58	-	V/°C
Gate-Source Threshold Voltage	$V_{GS(th)}$	V_{DS} = V_{GS}, I_D = 250 μA		2.0	-	4.0	V
Gate-Source Leakage	I_{GSS}	V_{GS} = ± 30 V		-	-	± 100	nA
Zero Gate Voltage Drain Current	I_{DSS}	V_{DS} = 500 V, V_{GS} = 0 V		-	-	25	μA
		V_{DS} = 400 V, V_{GS} = 0 V, T_J = 125 °C		-	-	250	
Drain-Source On-State Resistance	$R_{DS(on)}$	V_{GS} = 10 V	I_D = 4.8 A [b]	-	-	0.85	Ω
Forward Transconductance	g_{fs}	V_{DS} = 50 V, I_D = 4.8 A		3.7	-	-	S
Dynamic							
Input Capacitance	C_{iss}	V_{GS} = 0 V, V_{DS} = 25 V, f = 1.0 MHz, see fig. 5		-	1018	-	pF
Output Capacitance	C_{oss}			-	155	-	
Reverse Transfer Capacitance	C_{rss}			-	8.0	-	
Output Capacitance	C_{oss}	V_{GS} = 0 V	V_{DS} = 1.0 V, f = 1.0 MHz		1490		
Output Capacitance	C_{oss}		V_{DS} = 400 V, f = 1.0 MHz		42		
Effective Output Capacitance	C_{oss} eff.		V_{DS} = 0 V to 480 V [c, d]		56		
Total Gate Charge	Q_g	V_{GS} = 10 V	I_D = 8.0 A, V_{DS} = 400 V, see fig. 6 and 13 [b, d]	-	-	38	nC
Gate-Source Charge	Q_{gs}			-	-	9.0	
Gate-Drain Charge	Q_{gd}			-	-	18	
Turn-On Delay Time	$t_{d(on)}$	V_{DD} = 250 V, I_D = 8.0 A, R_g = 9.1 Ω, R_D = 31 Ω, see fig. 10 [b, d]		-	11	-	ns
Rise Time	t_r			-	23	-	
Turn-Off Delay Time	$t_{d(off)}$			-	26	-	
Fall Time	t_f			-	19	-	
Gate Input Resistance	R_g	f = 1 MHz, open drain		0.7	-	3.7	Ω
Drain-Source Body Diode Characteristics							
Continuous Source-Drain Diode Current	I_S	MOSFET symbol showing the integral reverse p - n junction diode		-	-	8.0	A
Pulsed Diode Forward Current [a]	I_{SM}			-	-	32	
Body Diode Voltage	V_{SD}	T_J = 25 °C, I_S = 8.0 A, V_{GS} = 0 V [b]		-	-	2.0	V
Body Diode Reverse Recovery Time	t_{rr}	T_J = 25 °C, I_F = 8.0 A, dI/dt = 100 A/μs [b]		-	422	633	ns
Body Diode Reverse Recovery Charge	Q_{rr}			-	2.0	3.0	μC
Forward Turn-On Time	t_{on}	Intrinsic turn-on time is negligible (turn-on is dominated by L_S and L_D)					

Notes

a. Repetitive rating; pulse width limited by maximum junction temperature (see fig. 11)
b. Pulse width ≤ 300 μs; duty cycle ≤ 2 %
c. C_{oss} eff. is a fixed capacitance that gives the same charging time as C_{oss} while V_{DS} is rising from 0 %to 80 % V_{DS}
d. Uses IRF840A, SiHF840A data and test conditions

THIS DOCUMENT IS SUBJECT TO CHANGE WITHOUT NOTICE. THE PRODUCTS DESCRIBED HEREIN AND THIS DOCUMENT ARE SUBJECT TO SPECIFIC DISCLAIMERS, SET FORTH AT www.vishay.com/doc?91000

TYPICAL CHARACTERISTICS (25 °C, unless otherwise noted)

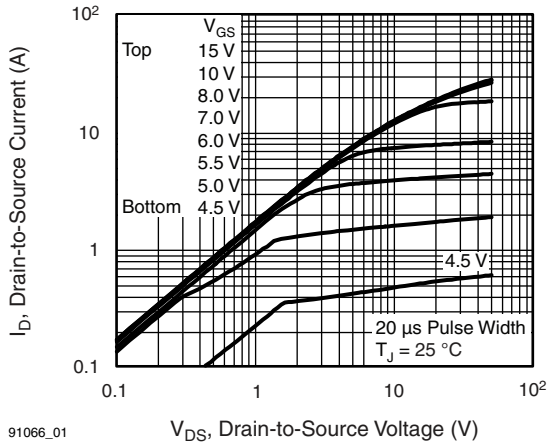

Fig. 1 - Typical Output Characteristics

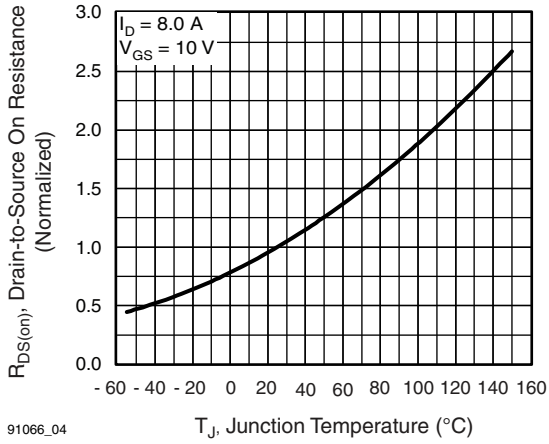

Fig. 4 - Normalized On-Resistance vs. Temperature

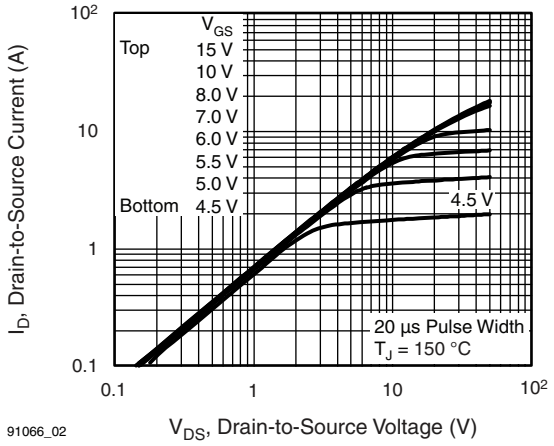

Fig. 2 - Typical Output Characteristics

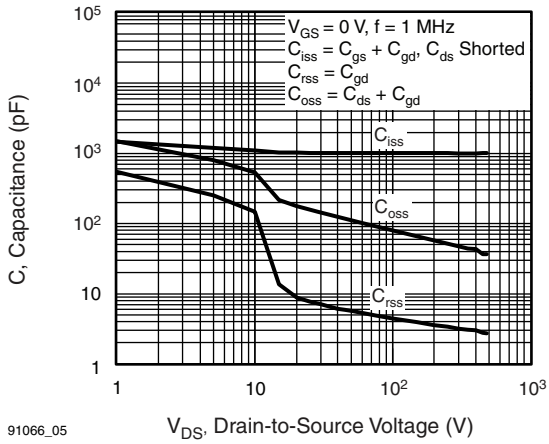

Fig. 5 - Typical Capacitance vs. Drain-to-Source Voltage

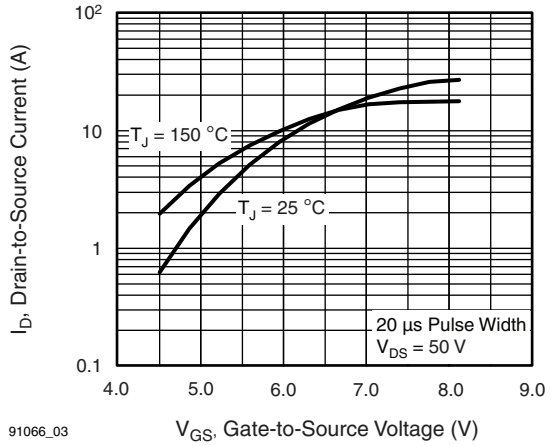

Fig. 3 - Typical Transfer Characteristics

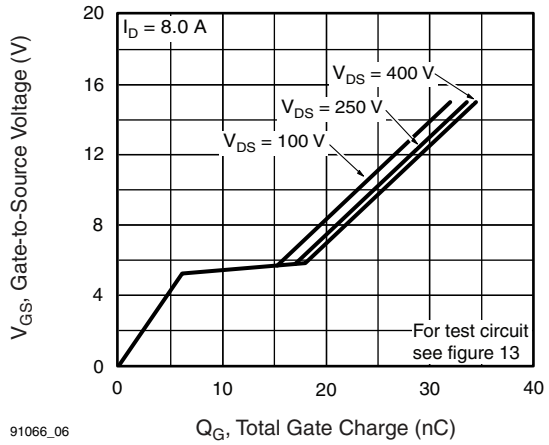

Fig. 6 - Typical Gate Charge vs. Gate-to-Source Voltage

THIS DOCUMENT IS SUBJECT TO CHANGE WITHOUT NOTICE. THE PRODUCTS DESCRIBED HEREIN AND THIS DOCUMENT ARE SUBJECT TO SPECIFIC DISCLAIMERS, SET FORTH AT www.vishay.com/doc?91000

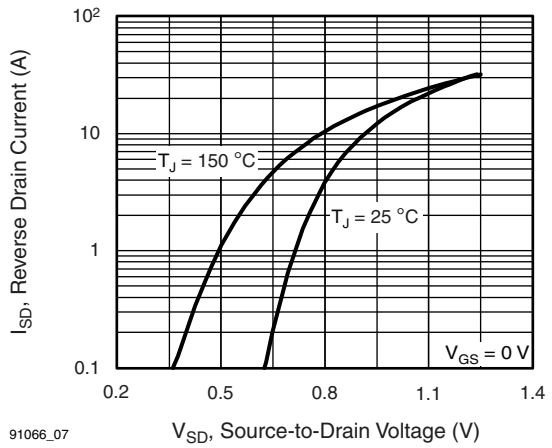

Fig. 7 - Typical Source-Drain Diode Forward Voltage

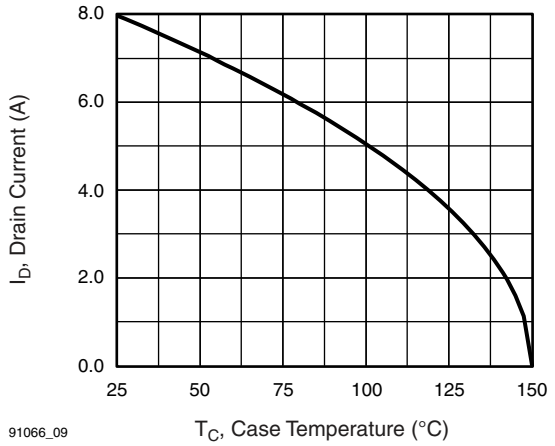

Fig. 9 - Maximum Drain Current vs. Case Temperature

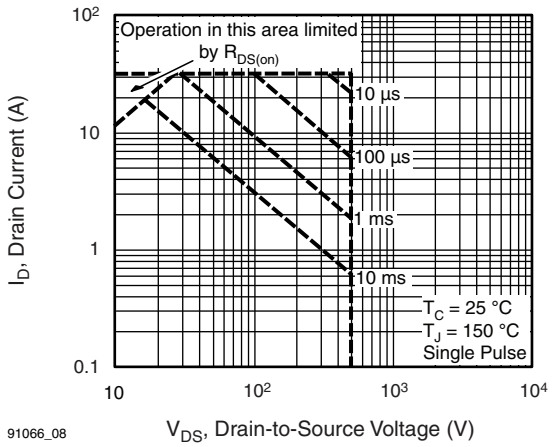

Fig. 8 - Maximum Safe Operating Area

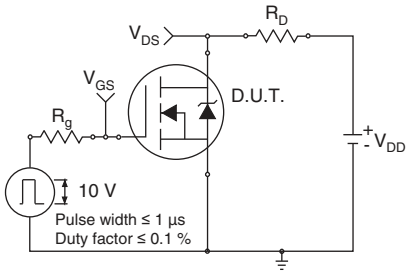

Fig. 10a - Switching Time Test Circuit

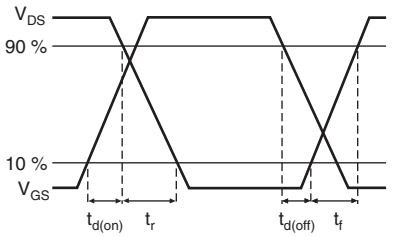

Fig. 10b - Switching Time Waveforms

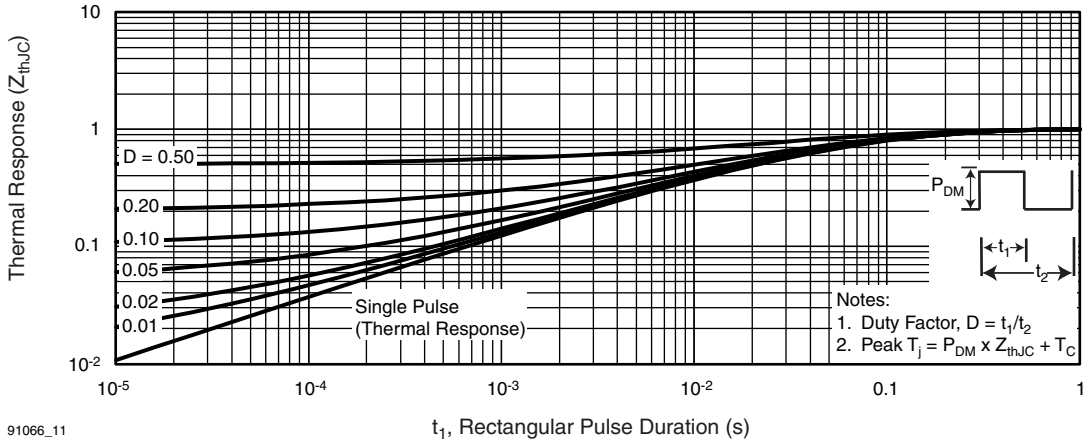

Fig. 11 - Maximum Effective Transient Thermal Impedance, Junction-to-Case

THIS DOCUMENT IS SUBJECT TO CHANGE WITHOUT NOTICE. THE PRODUCTS DESCRIBED HEREIN AND THIS DOCUMENT ARE SUBJECT TO SPECIFIC DISCLAIMERS, SET FORTH AT www.vishay.com/doc?91000

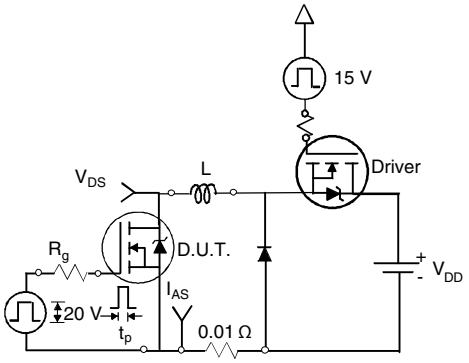

Fig. 12a - Unclamped Inductive Test Circuit

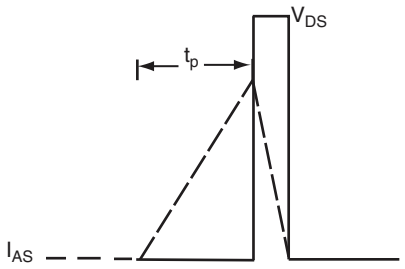

Fig. 12b - Unclamped Inductive Waveforms

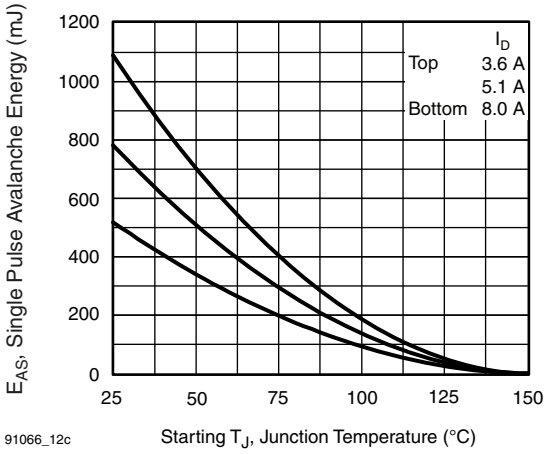

Fig. 12c - Maximum Avalanche Energy vs. Drain Current

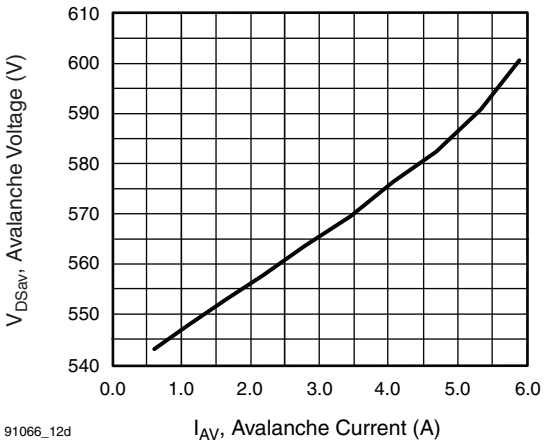

Fig. 12d - Typical Drain-to-Source Voltage vs. Avalanche Current

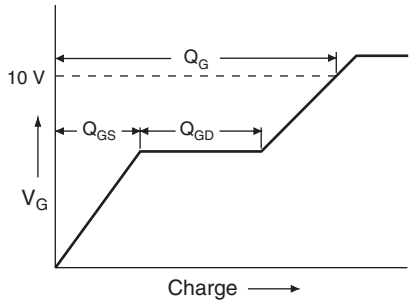

Fig. 13a - Basic Gate Charge Waveform

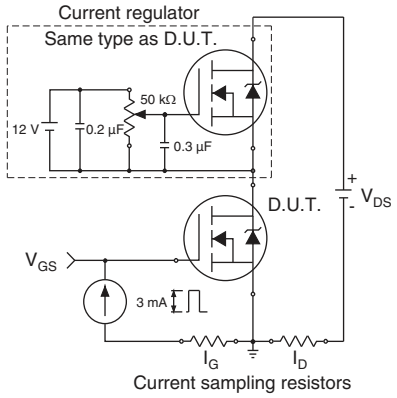

Fig. 13b - Gate Charge Test Circuit

THIS DOCUMENT IS SUBJECT TO CHANGE WITHOUT NOTICE. THE PRODUCTS DESCRIBED HEREIN AND THIS DOCUMENT ARE SUBJECT TO SPECIFIC DISCLAIMERS, SET FORTH AT www.vishay.com/doc?91000

Peak Diode Recovery dV/dt Test Circuit

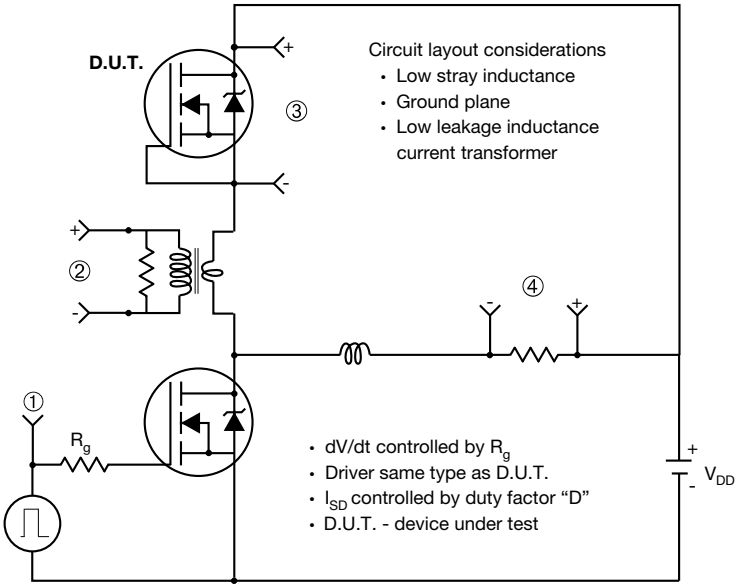

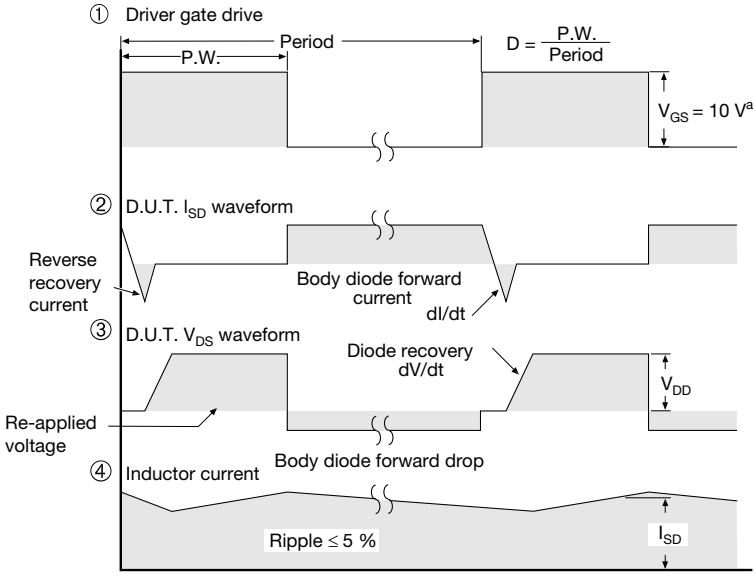

Note

a. V_{GS} = 5 V for logic level devices

Fig. 14 - For N-Channel

Vishay Siliconix maintains worldwide manufacturing capability. Products may be manufactured at one of several qualified locations. Reliability data for Silicon Technology and Package Reliability represent a composite of all qualified locations. For related documents such as package/tape drawings, part marking, and reliability data, see www.vishay.com/ppg?91066.

THIS DOCUMENT IS SUBJECT TO CHANGE WITHOUT NOTICE. THE PRODUCTS DESCRIBED HEREIN AND THIS DOCUMENT ARE SUBJECT TO SPECIFIC DISCLAIMERS, SET FORTH AT www.vishay.com/doc?91000

TO-263AB (HIGH VOLTAGE)

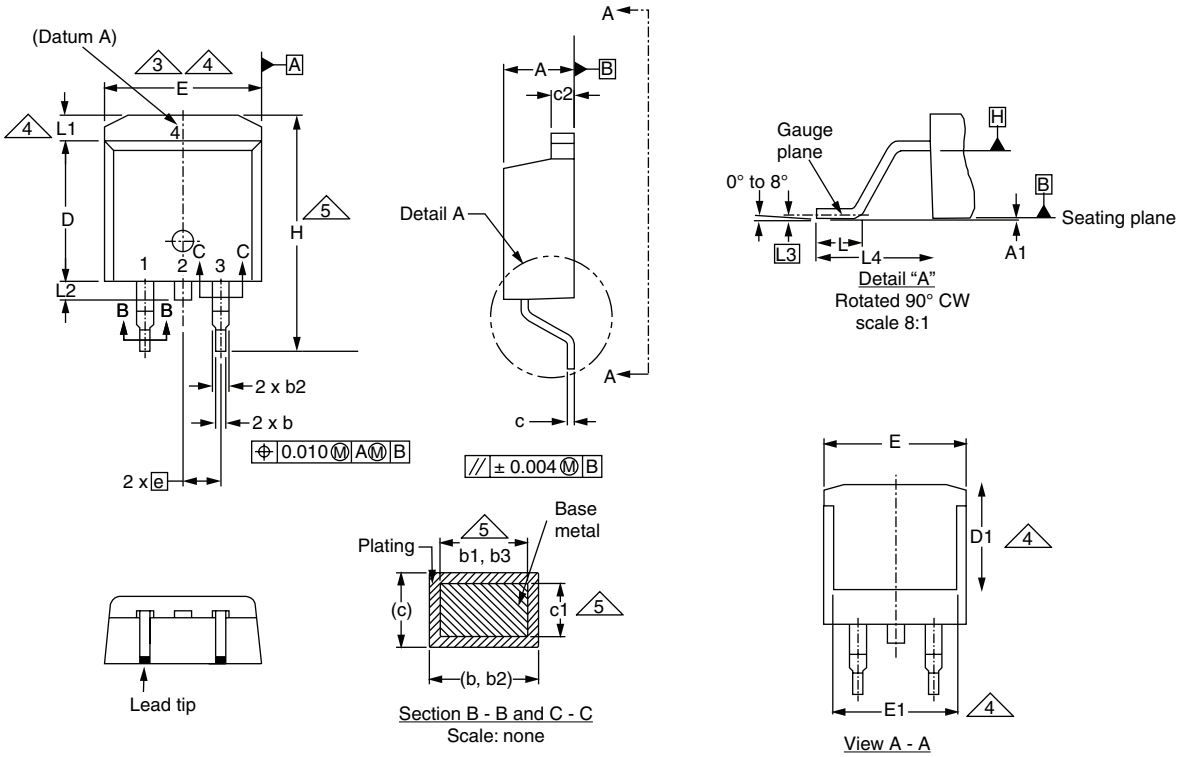

	MILLIMETERS		INCHES	
DIM.	MIN.	MAX.	MIN.	MAX.
A	4.06	4.83	0.160	0.190
A1	0.00	0.25	0.000	0.010
b	0.51	0.99	0.020	0.039
b1	0.51	0.89	0.020	0.035
b2	1.14	1.78	0.045	0.070
b3	1.14	1.73	0.045	0.068
c	0.38	0.74	0.015	0.029
c1	0.38	0.58	0.015	0.023
c2	1.14	1.65	0.045	0.065
D	8.38	9.65	0.330	0.380

	MILLIMETERS		INCHES	
DIM.	MIN.	MAX.	MIN.	MAX.
D1	6.86	-	0.270	-
E	9.65	10.67	0.380	0.420
E1	6.22	-	0.245	-
e	2.54 BSC		0.100 BSC	
H	14.61	15.88	0.575	0.625
L	1.78	2.79	0.070	0.110
L1	-	1.65	-	0.066
L2	-	1.78	-	0.070
L3	0.25 BSC		0.010 BSC	
L4	4.78	5.28	0.188	0.208

ECN: S-82110-Rev. A, 15-Sep-08
DWG: 5970

Notes

1. Dimensioning and tolerancing per ASME Y14.5M-1994.
2. Dimensions are shown in millimeters (inches).
3. Dimension D and E do not include mold flash. Mold flash shall not exceed 0.127 mm (0.005") per side. These dimensions are measured at the outmost extremes of the plastic body at datum A.
4. Thermal PAD contour optional within dimension E, L1, D1 and E1.
5. Dimension b1 and c1 apply to base metal only.
6. Datum A and B to be determined at datum plane H.
7. Outline conforms to JEDEC outline to TO-263AB.

I²PAK (TO-262) (HIGH VOLTAGE)

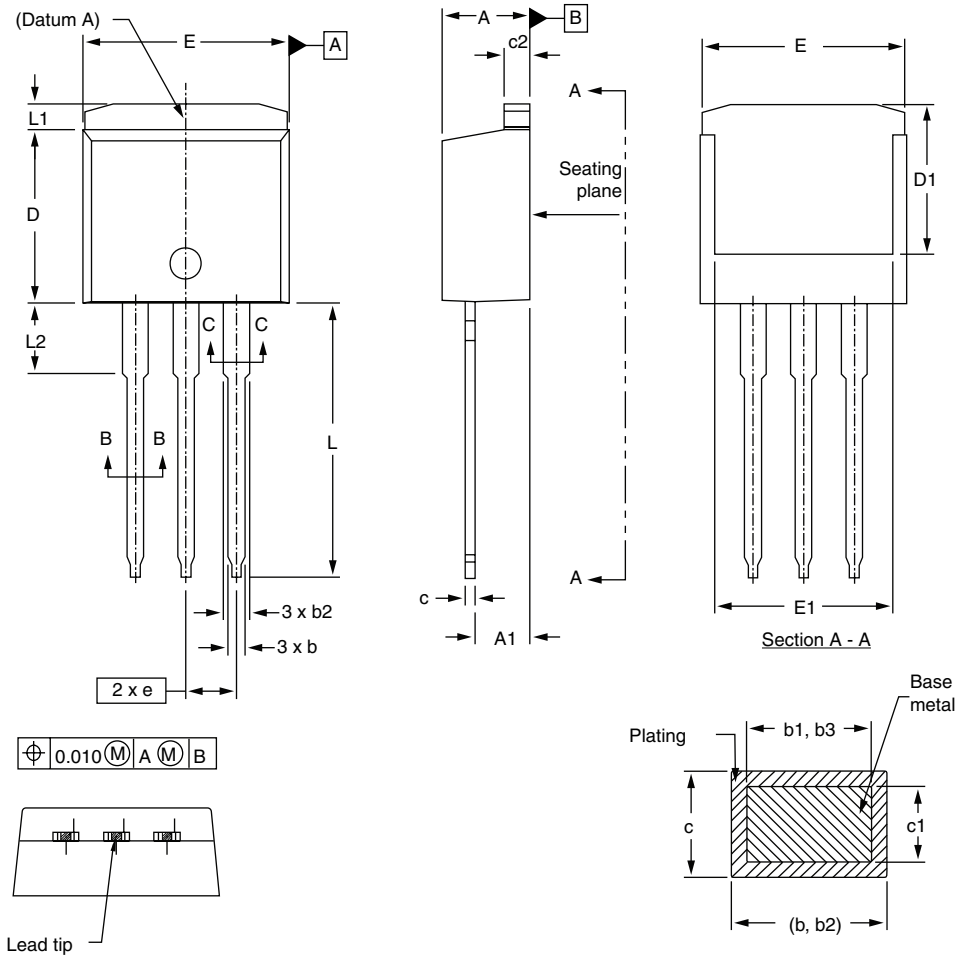

	MILLIMETERS		INCHES	
DIM.	MIN.	MAX.	MIN.	MAX.
A	4.06	4.83	0.160	0.190
A1	2.03	3.02	0.080	0.119
b	0.51	0.99	0.020	0.039
b1	0.51	0.89	0.020	0.035
b2	1.14	1.78	0.045	0.070
b3	1.14	1.73	0.045	0.068
c	0.38	0.74	0.015	0.029
c1	0.38	0.58	0.015	0.023
c2	1.14	1.65	0.045	0.065

	MILLIMETERS		INCHES	
DIM.	MIN.	MAX.	MIN.	MAX.
D	8.38	9.65	0.330	0.380
D1	6.86	-	0.270	-
E	9.65	10.67	0.380	0.420
E1	6.22	-	0.245	-
e	2.54 BSC		0.100 BSC	
L	13.46	14.10	0.530	0.555
L1	-	1.65	-	0.065
L2	3.56	3.71	0.140	0.146

ECN: S-82442-Rev. A, 27-Oct-08
DWG: 5977

Notes

1. Dimensioning and tolerancing per ASME Y14.5M-1994.
2. Dimension D and E do not include mold flash. Mold flash shall not exceed 0.127 mm per side. These dimensions are measured at the outmost extremes of the plastic body.
3. Thermal pad contour optional within dimension E, L1, D1, and E1.
4. Dimension b1 and c1 apply to base metal only.

RECOMMENDED MINIMUM PADS FOR D²PAK: 3-Lead

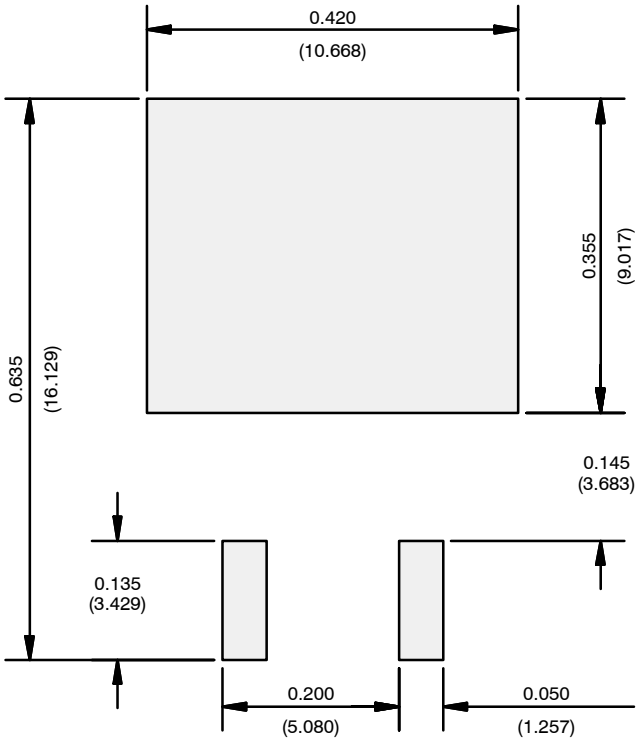

Recommended Minimum Pads
Dimensions in Inches/(mm)

Return to Index

Disclaimer

ALL PRODUCT, PRODUCT SPECIFICATIONS AND DATA ARE SUBJECT TO CHANGE WITHOUT NOTICE TO IMPROVE RELIABILITY, FUNCTION OR DESIGN OR OTHERWISE.

Vishay Intertechnology, Inc., its affiliates, agents, and employees, and all persons acting on its or their behalf (collectively, “Vishay”), disclaim any and all liability for any errors, inaccuracies or incompleteness contained in any datasheet or in any other disclosure relating to any product.

Vishay makes no warranty, representation or guarantee regarding the suitability of the products for any particular purpose or the continuing production of any product. To the maximum extent permitted by applicable law, Vishay disclaims (i) any and all liability arising out of the application or use of any product, (ii) any and all liability, including without limitation special, consequential or incidental damages, and (iii) any and all implied warranties, including warranties of fitness for particular purpose, non-infringement and merchantability.

Statements regarding the suitability of products for certain types of applications are based on Vishay's knowledge of typical requirements that are often placed on Vishay products in generic applications. Such statements are not binding statements about the suitability of products for a particular application. It is the customer's responsibility to validate that a particular product with the properties described in the product specification is suitable for use in a particular application. Parameters provided in datasheets and / or specifications may vary in different applications and performance may vary over time. All operating parameters, including typical parameters, must be validated for each customer application by the customer's technical experts. Product specifications do not expand or otherwise modify Vishay's terms and conditions of purchase, including but not limited to the warranty expressed therein.

Hyperlinks included in this datasheet may direct users to third-party websites. These links are provided as a convenience and for informational purposes only. Inclusion of these hyperlinks does not constitute an endorsement or an approval by Vishay of any of the products, services or opinions of the corporation, organization or individual associated with the third-party website. Vishay disclaims any and all liability and bears no responsibility for the accuracy, legality or content of the third-party website or for that of subsequent links.

Except as expressly indicated in writing, Vishay products are not designed for use in medical, life-saving, or life-sustaining applications or for any other application in which the failure of the Vishay product could result in personal injury or death. Customers using or selling Vishay products not expressly indicated for use in such applications do so at their own risk. Please contact authorized Vishay personnel to obtain written terms and conditions regarding products designed for such applications.

No license, express or implied, by estoppel or otherwise, to any intellectual property rights is granted by this document or by any conduct of Vishay. Product names and markings noted herein may be trademarks of their respective owners.

© 2023 VISHAY INTERTECHNOLOGY, INC. ALL RIGHTS RESERVED