# Dual Common-Cathode Ultrafast Rectifier

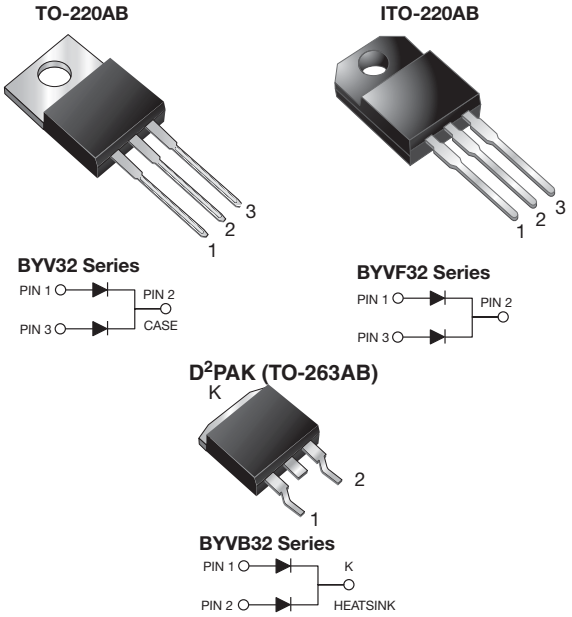


## DESIGN SUPPORT TOOLS AVAILABLE

3D Models

| PRIMARY CHARACTERISTICS | |
|---|---|
| $I_{F(AV)}$ | 18 A |
| $V_{RRM}$ | 50 V to 200 V |
| $I_{FSM}$ | 150 A |
| $t_{rr}$ | 25 ns |
| $V_F$ | 0.85 V |
| $T_J$ max. | 150 °C |
| Package | TO-220AB, ITO-220AB, D²PAK (TO-263AB) |
| Circuit configuration | Common cathode |

## FEATURES

RoHS COMPLIANT

- Power pack
- Glass passivated pellet chip junction
- Ultrafast recovery time
- Low switching losses, high efficiency
- Low forward voltage drop
- High forward surge capability
- Meets MSL level 1, per J-STD-020, LF maximum peak of 245 °C (for TO-263AB package)
- Solder dip 275 °C max. 10 s, per JESD 22-B106 (for TO-220AB and ITO-220AB package)
- AEC-Q101 qualified available
  - Automotive ordering code: base P/NHE3 (for ITO-220AB and D²PAK (TO-263AB package))
- Material categorization: for definitions of compliance please see www.vishay.com/doc?99912

## TYPICAL APPLICATIONS

For use in high frequency rectifier of switching mode power supplies, inverters, freewheeling diodes, DC/DC converters, and other power switching application.

## MECHANICAL DATA

**Case:** TO-220AB, ITO-220AB, D²PAK (TO-263AB)
Molding compound meets UL 94 V-0 flammability rating
Base P/N-E3 - RoHS-compliant, commercial grade
Base P/NHE3_X - RoHS-compliant and AEC-Q101 qualified
("_X" denotes revision code e.g. A, B,....)

**Terminals:** matte tin plated leads, solderable per J-STD-002 and JESD 22-B102
E3 suffix meets JESD 201 class 1A whisker test, HE3 suffix meets JESD 201 class 2 whisker test

**Polarity:** as marked

**Mounting Torque:** 10 in-lbs max.

**MAXIMUM RATINGS** ($T_C$ = 25 °C unless otherwise noted)

| PARAMETER | SYMBOL | BYV32-50 | BYV32-100 | BYV32-150 | BYV32-200 | UNIT |
|---|---|---|---|---|---|---|
| Maximum repetitive peak reverse voltage | $V_{RRM}$ | 50 | 100 | 150 | 200 | V |
| Maximum RMS voltage | $V_{RMS}$ | 35 | 70 | 105 | 140 | V |
| Maximum DC blocking voltage | $V_{DC}$ | 50 | 100 | 150 | 200 | V |
| Maximum average forward rectified current at $T_C$ = 125 °C | $I_{F(AV)}$ | 18 | | | | A |
| Peak forward surge current 8.3 ms single half sine-wave superimposed on rated load per diode | $I_{FSM}$ | 150 | | | | A |
| Operating storage and temperature range | $T_J$, $T_{STG}$ | -65 to +150 | | | | °C |
| Isolation voltage (ITO-220AB only) from terminal to heatsink t = 1 min | $V_{AC}$ | 1500 | | | | V |


For technical questions within your region: DiodesAmericas@vishay.com, DiodesAsia@vishay.com, DiodesEurope@vishay.com
THIS DOCUMENT IS SUBJECT TO CHANGE WITHOUT NOTICE. THE PRODUCTS DESCRIBED HEREIN AND THIS DOCUMENT ARE SUBJECT TO SPECIFIC DISCLAIMERS, SET FORTH AT www.vishay.com/doc?91000

| **ELECTRICAL CHARACTERISTICS** ($T_C$ = 25 °C unless otherwise noted) | | | | | | | | |
|---|---|---|---|---|---|---|---|---|
| **PARAMETER** | **TEST CONDITIONS** | | **SYMBOL** | **BYV32-50** | **BYV32-100** | **BYV32-150** | **BYV32-200** | **UNIT** |
| Maximum instantaneous forward voltage per diode | $I_F$ = 20 A | $T_J$ = 25 °C | $V_F$ (1) | 1.15 | | | | V |
| | $_F$ = 5.0 A | $T_J$ = 100 °C | | 0.85 | | | | |
| Maximum DC reverse current per diode at rated DC blocking voltage | | $T_J$ = 25 °C | $I_R$ | 10 | | | | µA |
| | | $T_J$ = 100 °C | | 600 | | | | |
| Maximum reverse recovery time per diode | $I_F$ = 1 A, $V_R$ = 30 V dI/dt = 100 A/µs, $I_{rr}$ = 10 % $I_{RM}$ | | $t_{rr}$ | 25 | | | | ns |
| Typical junction capacitance per diode | 4.0 V, 1 MHz | | $C_J$ | 45 | | | | pF |

**Note**

(1) Pulse test: 300 µs pulse width, 1 % duty cycle

| **THERMAL CHARACTERISTICS** ($T_C$ = 25 °C unless otherwise noted) | | | | | |
|---|---|---|---|---|---|
| **PARAMETER** | **SYMBOL** | **BYV** | **BYVF** | **BYVB** | **UNIT** |
| Typical thermal resistance from junction to case per diode | $R_{\theta JC}$ | 1.6 | 5.0 | 1.6 | °C/W |

| **ORDERING INFORMATION** (Example) | | | | | |
|---|---|---|---|---|---|
| **PACKAGE** | **PREFERRED P/N** | **UNIT WEIGHT (g)** | **PACKAGE CODE** | **BASE QUANTITY** | **DELIVERY MODE** |
| TO-220AB | BYV32-200-E3/45 | 1.85 | 45 | 50/tube | Tube |
| ITO-220AB | BYVF32-200-E3/45 | 1.97 | 45 | 50/tube | Tube |
| TO-263AB | BYVB32-200-E3/45 | 1.35 | 45 | 50/tube | Tube |
| TO-263AB | BYVB32-200-E3/81 | 1.35 | 81 | 800/reel | Tape and reel |
| ITO-220AB | BYVF32-200HE3_A/P (1) | 1.97 | P | 50/tube | Tube |
| TO-263AB | BYVB32-200HE3_A/P (1) | 1.35 | P | 50/tube | Tube |
| TO-263AB | BYVB32-200HE3_A/I (1) | 1.35 | I | 800/reel | Tape and reel |

**Note**

(1) AEC-Q101 qualified, available in ITO-220AB and TO-263AB package


For technical questions within your region: DiodesAmericas@vishay.com, DiodesAsia@vishay.com, DiodesEurope@vishay.com
THIS DOCUMENT IS SUBJECT TO CHANGE WITHOUT NOTICE. THE PRODUCTS DESCRIBED HEREIN AND THIS DOCUMENT ARE SUBJECT TO SPECIFIC DISCLAIMERS, SET FORTH AT www.vishay.com/doc?91000

**RATINGS AND CHARACTERISTICS CURVES** ($T_A$ = 25 °C unless otherwise noted)

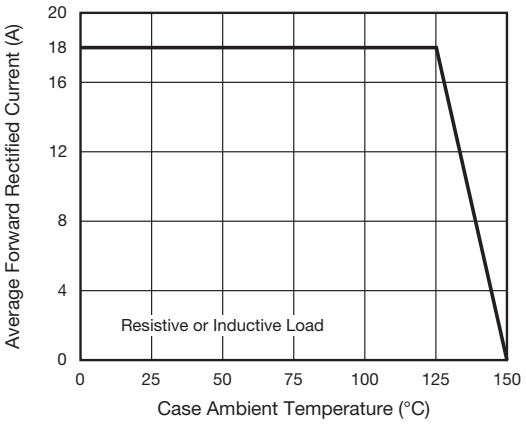


Fig. 1 - Forward Current Derating Curve

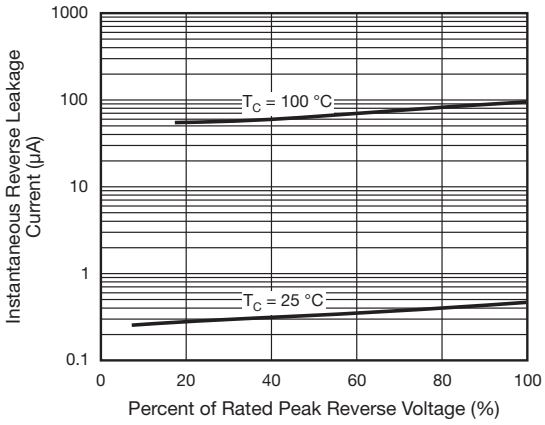


Fig. 4 - Typical Reverse Leakage Characteristics Per Diode

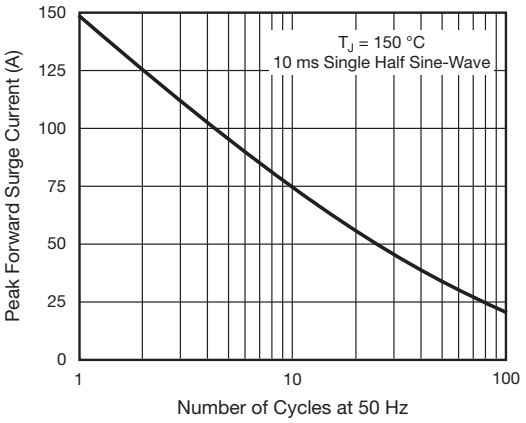


Fig. 2 - Maximum Non-Repetitive Peak Forward Surge Current Per Diode

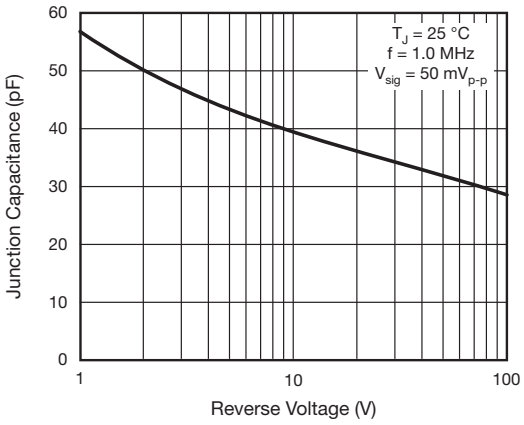


Fig. 5 - Typical Junction Capacitance Per Diode

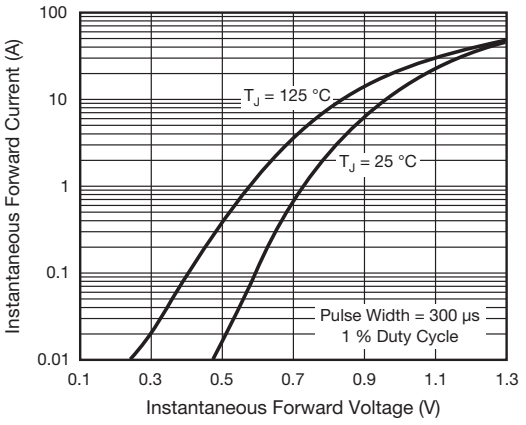


Fig. 3 - Typical Instantaneous Forward Characteristics Per Diode


For technical questions within your region: DiodesAmericas@vishay.com, DiodesAsia@vishay.com, DiodesEurope@vishay.com
THIS DOCUMENT IS SUBJECT TO CHANGE WITHOUT NOTICE. THE PRODUCTS DESCRIBED HEREIN AND THIS DOCUMENT ARE SUBJECT TO SPECIFIC DISCLAIMERS, SET FORTH AT www.vishay.com/doc?91000

**PACKAGE OUTLINE DIMENSIONS** in inches (millimeters)

### TO-220AB

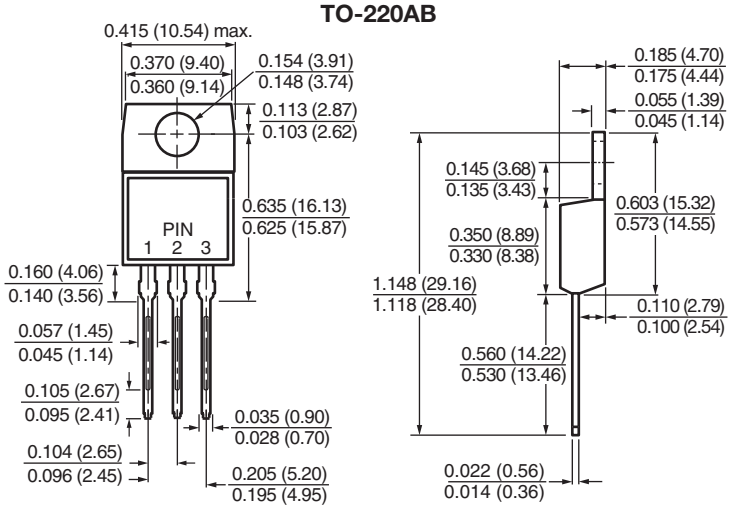


### ITO-220AB

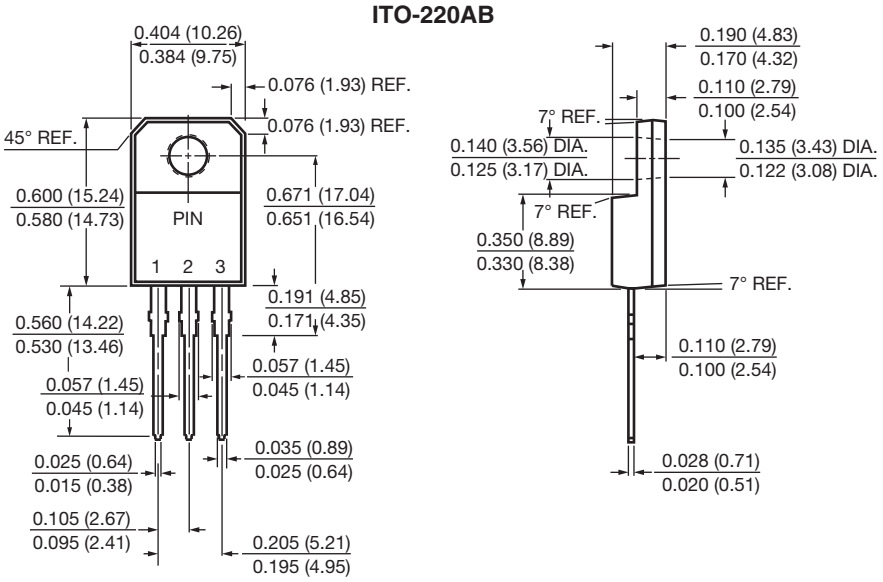


### D²PAK (TO-263AB)

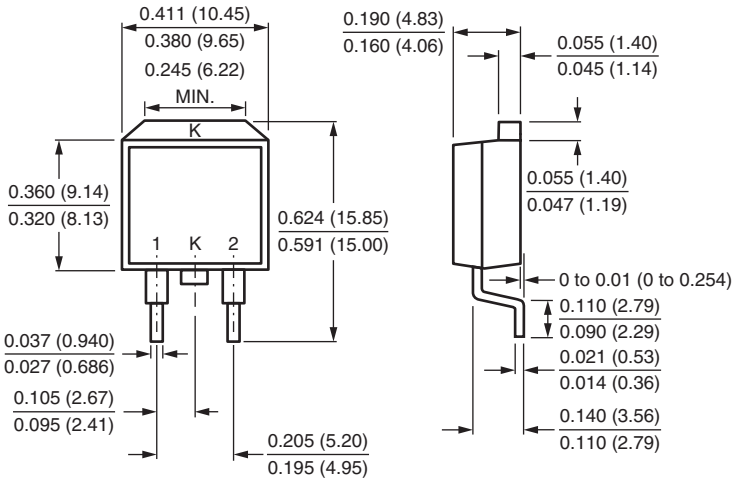


### Mounting Pad Layout

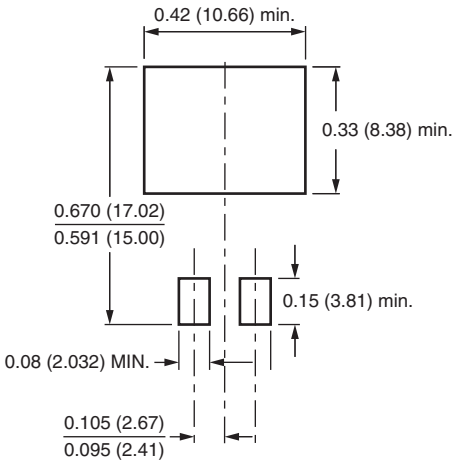



For technical questions within your region: DiodesAmericas@vishay.com, DiodesAsia@vishay.com, DiodesEurope@vishay.com
THIS DOCUMENT IS SUBJECT TO CHANGE WITHOUT NOTICE. THE PRODUCTS DESCRIBED HEREIN AND THIS DOCUMENT ARE SUBJECT TO SPECIFIC DISCLAIMERS, SET FORTH AT www.vishay.com/doc?91000

# Disclaimer

ALL PRODUCT, PRODUCT SPECIFICATIONS AND DATA ARE SUBJECT TO CHANGE WITHOUT NOTICE TO IMPROVE RELIABILITY, FUNCTION OR DESIGN OR OTHERWISE.

Vishay Intertechnology, Inc., its affiliates, agents, and employees, and all persons acting on its or their behalf (collectively, “Vishay”), disclaim any and all liability for any errors, inaccuracies or incompleteness contained in any datasheet or in any other disclosure relating to any product.

Vishay makes no warranty, representation or guarantee regarding the suitability of the products for any particular purpose or the continuing production of any product. To the maximum extent permitted by applicable law, Vishay disclaims (i) any and all liability arising out of the application or use of any product, (ii) any and all liability, including without limitation special, consequential or incidental damages, and (iii) any and all implied warranties, including warranties of fitness for particular purpose, non-infringement and merchantability.

Statements regarding the suitability of products for certain types of applications are based on Vishay's knowledge of typical requirements that are often placed on Vishay products in generic applications. Such statements are not binding statements about the suitability of products for a particular application. It is the customer's responsibility to validate that a particular product with the properties described in the product specification is suitable for use in a particular application. Parameters provided in datasheets and / or specifications may vary in different applications and performance may vary over time. All operating parameters, including typical parameters, must be validated for each customer application by the customer's technical experts. Product specifications do not expand or otherwise modify Vishay's terms and conditions of purchase, including but not limited to the warranty expressed therein.

Hyperlinks included in this datasheet may direct users to third-party websites. These links are provided as a convenience and for informational purposes only. Inclusion of these hyperlinks does not constitute an endorsement or an approval by Vishay of any of the products, services or opinions of the corporation, organization or individual associated with the third-party website. Vishay disclaims any and all liability and bears no responsibility for the accuracy, legality or content of the third-party website or for that of subsequent links.

Except as expressly indicated in writing, Vishay products are not designed for use in medical, life-saving, or life-sustaining applications or for any other application in which the failure of the Vishay product could result in personal injury or death. Customers using or selling Vishay products not expressly indicated for use in such applications do so at their own risk. Please contact authorized Vishay personnel to obtain written terms and conditions regarding products designed for such applications.

No license, express or implied, by estoppel or otherwise, to any intellectual property rights is granted by this document or by any conduct of Vishay. Product names and markings noted herein may be trademarks of their respective owners.

***© 2023 VISHAY INTERTECHNOLOGY, INC. ALL RIGHTS RESERVED***