Standard Avalanche Sinterglass Diode

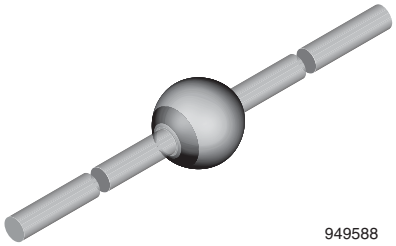

FEATURES

- Glass passivated junction
- Hermetically sealed package
- Material categorization: for definitions of compliance please see www.vishay.com/doc?99912

RoHS COMPLIANT
HALOGEN FREE

APPLICATIONS

- High voltage rectification
- Efficiency diode in horizontal deflection circuit

DESIGN SUPPORT TOOLS

click logo to get started

3D Models Available

MECHANICAL DATA

Case: SOD-64

Terminals: plated axial leads, solderable per MIL-STD-750, method 2026

Polarity: color band denotes cathode end

Mounting position: any

Weight: approx. 858 mg

ORDERING INFORMATION (Example)

DEVICE NAME	ORDERING CODE	TAPED UNITS	MINIMUM ORDER QUANTITY
BY228	BY228TR	2500 per 10" tape and reel	12 500
BY228	BY228TAP	2500 per ammopack	12 500

PARTS TABLE

PART	TYPE DIFFERENTIATION	PACKAGE
BY228	V_R = 1500 V; $I_{F(AV)}$ = 3 A	SOD-64

ABSOLUTE MAXIMUM RATINGS (T_{amb} = 25 °C, unless otherwise specified)

PARAMETER	TEST CONDITION	PART	SYMBOL	VALUE	UNIT
Reverse voltage	See electrical characteristics	BY228	V_R	1500	V
Repetitive peak reverse voltage	I_R = 100 µA		V_{RRM}	1650	V
Peak forward surge current	t_p = 10 ms, half sine wave		I_{FSM}	50	A
Average forward current			$I_{F(AV)}$	3	A
Junction temperature			T_j	140	°C
Storage temperature range			T_{stg}	-55 to +175	°C
Non repetitive reverse avalanche energy	$I_{(BR)R}$ = 0.4 A		E_R	10	mJ

MAXIMUM THERMAL RESISTANCE (T_{amb} = 25 °C, unless otherwise specified)

PARAMETER	TEST CONDITION	SYMBOL	VALUE	UNIT
Junction ambient	On PC board with spacing 25 mm	R_{thJA}	70	K/W

For technical questions within your region: DiodesAmericas@vishay.com, DiodesAsia@vishay.com, DiodesEurope@vishay.com
THIS DOCUMENT IS SUBJECT TO CHANGE WITHOUT NOTICE. THE PRODUCTS DESCRIBED HEREIN AND THIS DOCUMENT ARE SUBJECT TO SPECIFIC DISCLAIMERS, SET FORTH AT www.vishay.com/doc?91000

ELECTRICAL CHARACTERISTICS (T_{amb} = 25 °C, unless otherwise specified)						
PARAMETER	**TEST CONDITION**	**SYMBOL**	**MIN.**	**TYP.**	**MAX.**	**UNIT**
Forward voltage	I_F = 5 A	V_F	-	-	1.5	V
Reverse current	V_R = 1500 V	I_R	-	2	5	μA
	V_R = 1500 V, T_j = 140 °C	I_R	-	-	140	μA
Reverse recovery time	I_F = 0.5 A, I_R = 1 A, i_R = 0.25 A	t_{rr}	-	-	2	μs
Total reverse recovery time	I_F = 1 A, - dI_F/dt = 0.05 A/μs	t_{rr}	-	-	20	μs

TYPICAL CHARACTERISTICS (T_{amb} = 25 °C, unless otherwise specified)

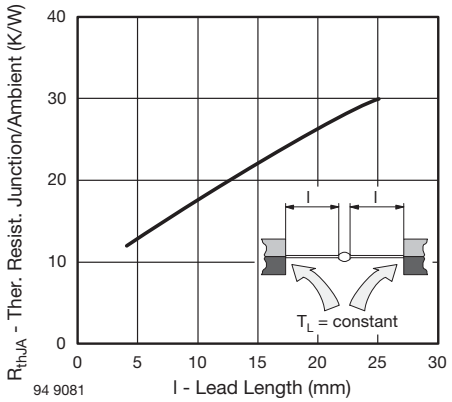

Fig. 1 - Typ. Thermal Resistance vs. Lead Length

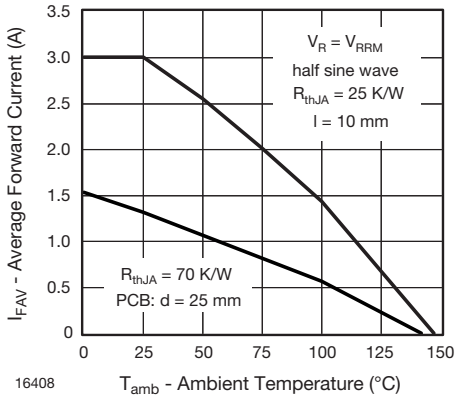

Fig. 3 - Max. Average Forward Current vs. Ambient Temperature

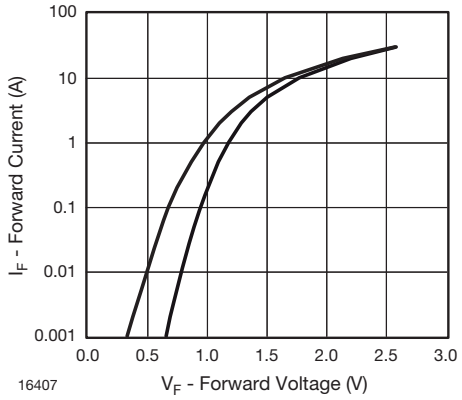

Fig. 2 - Forward Current vs. Forward Voltage

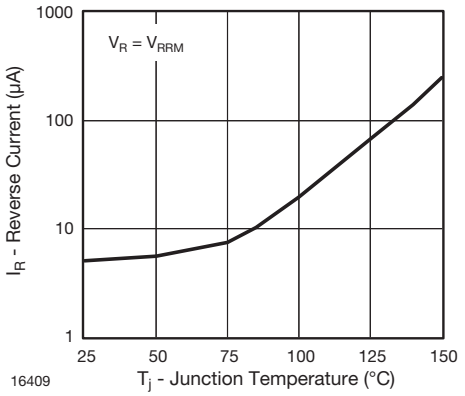

Fig. 4 - Reverse Current vs. Junction Temperature

For technical questions within your region: DiodesAmericas@vishay.com, DiodesAsia@vishay.com, DiodesEurope@vishay.com
THIS DOCUMENT IS SUBJECT TO CHANGE WITHOUT NOTICE. THE PRODUCTS DESCRIBED HEREIN AND THIS DOCUMENT ARE SUBJECT TO SPECIFIC DISCLAIMERS, SET FORTH AT www.vishay.com/doc?91000

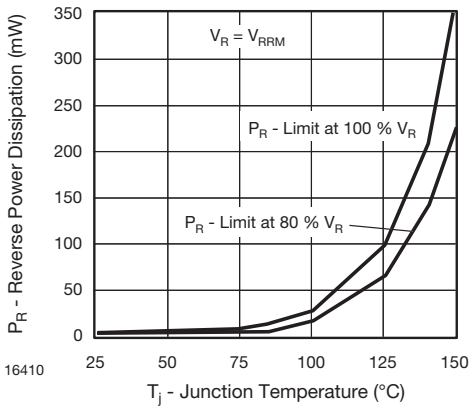

Fig. 5 - Max. Reverse Power Dissipation vs. Junction Temperature

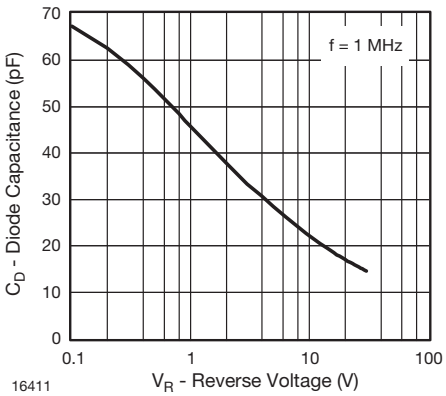

Fig. 6 - Diode Capacitance vs. Reverse Voltage

PACKAGE DIMENSIONS in millimeters (inches): **SOD-64**

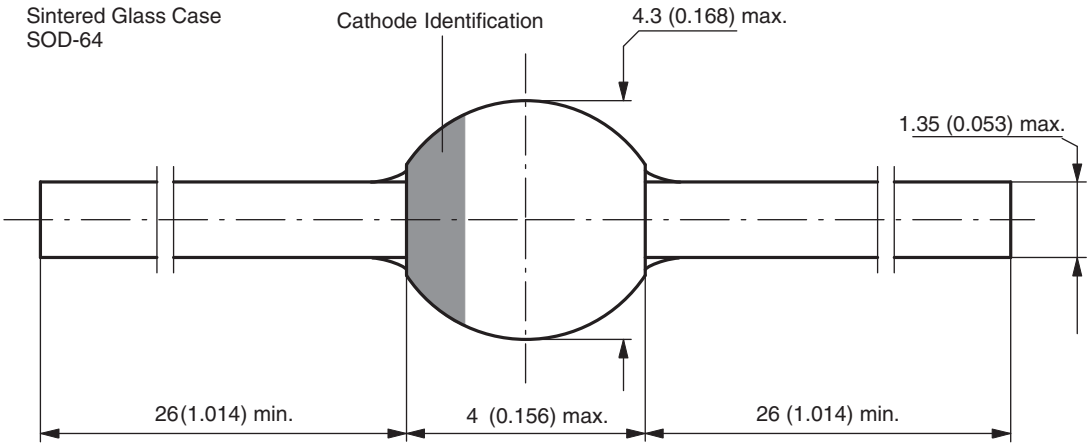

Document-No.: 6.563-5006.4-4
Rev. 3 - Date: 09.February.2005
94 9587

For technical questions within your region: DiodesAmericas@vishay.com, DiodesAsia@vishay.com, DiodesEurope@vishay.com
THIS DOCUMENT IS SUBJECT TO CHANGE WITHOUT NOTICE. THE PRODUCTS DESCRIBED HEREIN AND THIS DOCUMENT ARE SUBJECT TO SPECIFIC DISCLAIMERS, SET FORTH AT www.vishay.com/doc?91000

Disclaimer

ALL PRODUCT, PRODUCT SPECIFICATIONS AND DATA ARE SUBJECT TO CHANGE WITHOUT NOTICE TO IMPROVE RELIABILITY, FUNCTION OR DESIGN OR OTHERWISE.

Vishay Intertechnology, Inc., its affiliates, agents, and employees, and all persons acting on its or their behalf (collectively, “Vishay”), disclaim any and all liability for any errors, inaccuracies or incompleteness contained in any datasheet or in any other disclosure relating to any product.

Vishay makes no warranty, representation or guarantee regarding the suitability of the products for any particular purpose or the continuing production of any product. To the maximum extent permitted by applicable law, Vishay disclaims (i) any and all liability arising out of the application or use of any product, (ii) any and all liability, including without limitation special, consequential or incidental damages, and (iii) any and all implied warranties, including warranties of fitness for particular purpose, non-infringement and merchantability.

Statements regarding the suitability of products for certain types of applications are based on Vishay's knowledge of typical requirements that are often placed on Vishay products in generic applications. Such statements are not binding statements about the suitability of products for a particular application. It is the customer's responsibility to validate that a particular product with the properties described in the product specification is suitable for use in a particular application. Parameters provided in datasheets and / or specifications may vary in different applications and performance may vary over time. All operating parameters, including typical parameters, must be validated for each customer application by the customer's technical experts. Product specifications do not expand or otherwise modify Vishay's terms and conditions of purchase, including but not limited to the warranty expressed therein.

Hyperlinks included in this datasheet may direct users to third-party websites. These links are provided as a convenience and for informational purposes only. Inclusion of these hyperlinks does not constitute an endorsement or an approval by Vishay of any of the products, services or opinions of the corporation, organization or individual associated with the third-party website. Vishay disclaims any and all liability and bears no responsibility for the accuracy, legality or content of the third-party website or for that of subsequent links.

Except as expressly indicated in writing, Vishay products are not designed for use in medical, life-saving, or life-sustaining applications or for any other application in which the failure of the Vishay product could result in personal injury or death. Customers using or selling Vishay products not expressly indicated for use in such applications do so at their own risk. Please contact authorized Vishay personnel to obtain written terms and conditions regarding products designed for such applications.

No license, express or implied, by estoppel or otherwise, to any intellectual property rights is granted by this document or by any conduct of Vishay. Product names and markings noted herein may be trademarks of their respective owners.

© 2023 VISHAY INTERTECHNOLOGY, INC. ALL RIGHTS RESERVED