Small Signal Switching Diode, Dual in Series

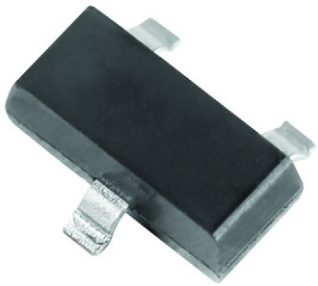

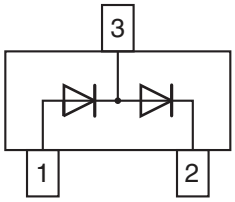

18109

FEATURES

- Fast switching speed
- High conductance
- Surface mount package ideally suited for automatic insertion
- Connected in series
- AEC-Q101 qualified available
- Base P/N-E3 - RoHS-compliant, commercial grade
- Base P/N-HE3 - RoHS-compliant, AEC-Q101 qualified
- Material categorization: for definitions of compliance please see www.vishay.com/doc?99912

Pb-free
e3
RoHS COMPLIANT

LINKS TO ADDITIONAL RESOURCES

3D Models

MECHANICAL DATA

Case: SOT-23

Weight: approx. 8.8 mg

Packaging codes / options:

18/10K per 13" reel (8 mm tape), 10K/box

08/3K per 7" reel (8 mm tape), 15K/box

PARTS TABLE

PART	ORDERING CODE	CIRCUIT CONFIGURATION	TYPE MARKING	REMARKS
BAV99	BAV99-E3-08 or BAV99-E3-18	Dual serial	JE	Tape and reel
	BAV99-HE3-08 or BAV99-HE3-18			

ABSOLUTE MAXIMUM RATINGS (T_{amb} = 25 °C, unless otherwise specified)

PARAMETER	TEST CONDITION	SYMBOL	VALUE	UNIT
Non repetitive peak reverse voltage		V_{RM}	100	V
Repetitive peak reverse voltage = working peak reverse voltage = DC blocking voltage		$V_{RRM} = V_{RWM} = V_R$	70	
Peak forward surge current	t_p = 1 s	I_{FSM}	1	A
	t_p = 1 µs		4.5	
Average forward current	Half wave rectification with resistive load and f ≥ 50 MHz, on ceramic substrate 10 mm x 8 mm x 0.7 mm	$I_{F(AV)}$	150	mA
Forward current	On ceramic substrate 10 mm x 8 mm x 0.7 mm	I_F	250	
Power dissipation	On ceramic substrate 10 mm x 8 mm x 0.7 mm	P_{tot}	300	mW

THERMAL CHARACTERISTICS (T_{amb} = 25 °C, unless otherwise specified)

PARAMETER	TEST CONDITION	SYMBOL	VALUE	UNIT
Junction ambient	On ceramic substrate 10 mm x 8 mm x 0.7 mm	R_{thJA}	430	K/W
Junction and storage temperature range		$T_j = T_{stg}$	-55 to +150	°C
Operating temperature range		T_{op}	-55 to +150	°C

For technical questions within your region: DiodesAmericas@vishay.com, DiodesAsia@vishay.com, DiodesEurope@vishay.com
THIS DOCUMENT IS SUBJECT TO CHANGE WITHOUT NOTICE. THE PRODUCTS DESCRIBED HEREIN AND THIS DOCUMENT ARE SUBJECT TO SPECIFIC DISCLAIMERS, SET FORTH AT www.vishay.com/doc?91000

ELECTRICAL CHARACTERISTICS (T_{amb} = 25 °C, unless otherwise specified)						
PARAMETER	**TEST CONDITION**	**SYMBOL**	**MIN.**	**TYP.**	**MAX.**	**UNIT**
Forward voltage	I_F = 1 mA	V_F			0.715	V
	I_F = 10 mA				0.855	V
	I_F = 50 mA				1	V
	I_F = 150 mA				1.25	V
Reverse current	V_R = 70 V	I_R			2500	nA
	V_R = 70 V, Tj = 150 °C				50	µA
	V_R = 25 V, Tj = 150 °C				30	µA
Diode capacitance	V_R = 0, f = 1 MHz	C_D			1.5	pF
Reverse recovery time	I_F = 10 mA to i_R = 1 mA, V_R = 6 V, R_L = 100 Ω	t_{rr}			6	ns

TYPICAL CHARACTERISTICS (T_{amb} = 25 °C, unless otherwise specified)

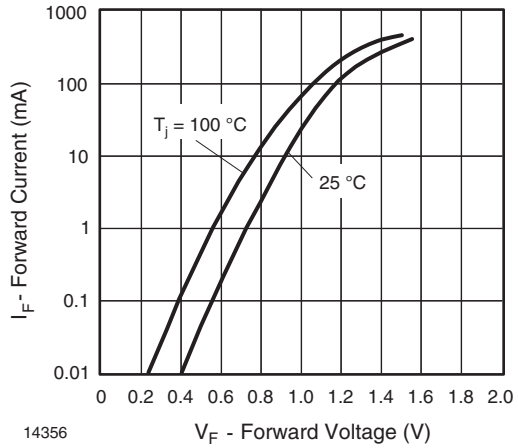

Fig. 1 - Forward Current vs. Forward Voltage

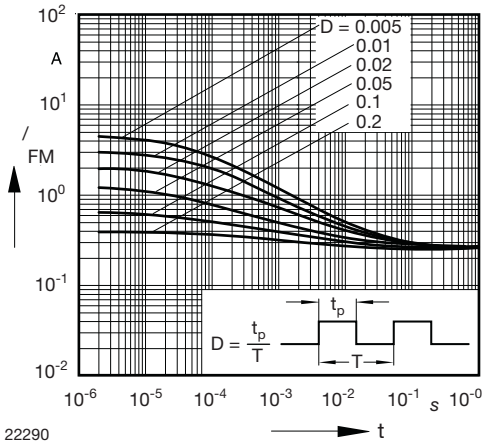

Fig. 2 - Peak forward current $/_{FM}$ = f (t_p)

LAYOUT FOR R_{thJA} TEST

Thickness:
Fiberglass 1.5 mm (0.059 inches)
Copper leads 0.3 mm (0.012 inches)

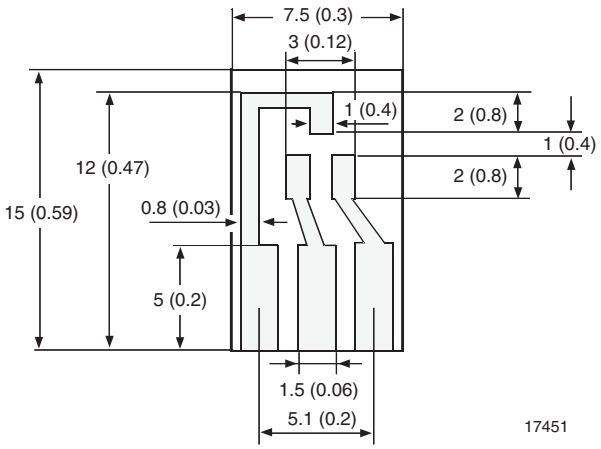

For technical questions within your region: DiodesAmericas@vishay.com, DiodesAsia@vishay.com, DiodesEurope@vishay.com
THIS DOCUMENT IS SUBJECT TO CHANGE WITHOUT NOTICE. THE PRODUCTS DESCRIBED HEREIN AND THIS DOCUMENT ARE SUBJECT TO SPECIFIC DISCLAIMERS, SET FORTH AT www.vishay.com/doc?91000

PACKAGE DIMENSIONS in millimeters (inches): **SOT-23**

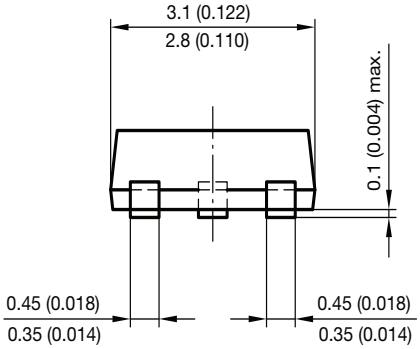

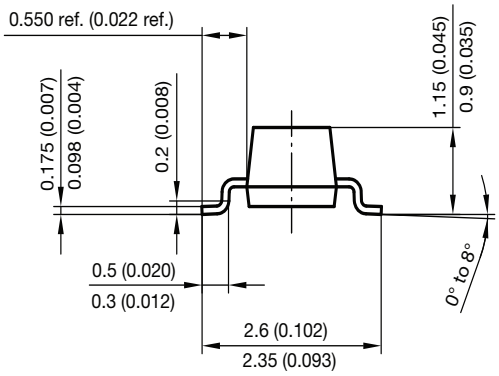

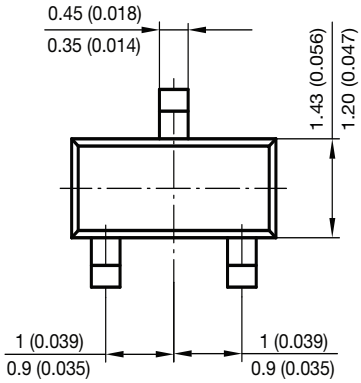

Foot print recommendation:

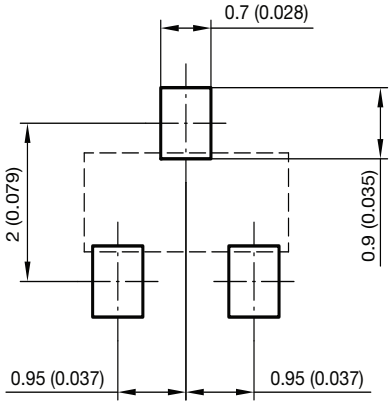

Document no.: 6.541-5014.01-4
Rev. 8 - Date: 23. Sep. 2009
17418

For technical questions within your region: DiodesAmericas@vishay.com, DiodesAsia@vishay.com, DiodesEurope@vishay.com
THIS DOCUMENT IS SUBJECT TO CHANGE WITHOUT NOTICE. THE PRODUCTS DESCRIBED HEREIN AND THIS DOCUMENT ARE SUBJECT TO SPECIFIC DISCLAIMERS, SET FORTH AT www.vishay.com/doc?91000

Disclaimer

ALL PRODUCT, PRODUCT SPECIFICATIONS AND DATA ARE SUBJECT TO CHANGE WITHOUT NOTICE TO IMPROVE RELIABILITY, FUNCTION OR DESIGN OR OTHERWISE.

Vishay Intertechnology, Inc., its affiliates, agents, and employees, and all persons acting on its or their behalf (collectively, “Vishay”), disclaim any and all liability for any errors, inaccuracies or incompleteness contained in any datasheet or in any other disclosure relating to any product.

Vishay makes no warranty, representation or guarantee regarding the suitability of the products for any particular purpose or the continuing production of any product. To the maximum extent permitted by applicable law, Vishay disclaims (i) any and all liability arising out of the application or use of any product, (ii) any and all liability, including without limitation special, consequential or incidental damages, and (iii) any and all implied warranties, including warranties of fitness for particular purpose, non-infringement and merchantability.

Statements regarding the suitability of products for certain types of applications are based on Vishay's knowledge of typical requirements that are often placed on Vishay products in generic applications. Such statements are not binding statements about the suitability of products for a particular application. It is the customer's responsibility to validate that a particular product with the properties described in the product specification is suitable for use in a particular application. Parameters provided in datasheets and / or specifications may vary in different applications and performance may vary over time. All operating parameters, including typical parameters, must be validated for each customer application by the customer's technical experts. Product specifications do not expand or otherwise modify Vishay's terms and conditions of purchase, including but not limited to the warranty expressed therein.

Hyperlinks included in this datasheet may direct users to third-party websites. These links are provided as a convenience and for informational purposes only. Inclusion of these hyperlinks does not constitute an endorsement or an approval by Vishay of any of the products, services or opinions of the corporation, organization or individual associated with the third-party website. Vishay disclaims any and all liability and bears no responsibility for the accuracy, legality or content of the third-party website or for that of subsequent links.

Except as expressly indicated in writing, Vishay products are not designed for use in medical, life-saving, or life-sustaining applications or for any other application in which the failure of the Vishay product could result in personal injury or death. Customers using or selling Vishay products not expressly indicated for use in such applications do so at their own risk. Please contact authorized Vishay personnel to obtain written terms and conditions regarding products designed for such applications.

No license, express or implied, by estoppel or otherwise, to any intellectual property rights is granted by this document or by any conduct of Vishay. Product names and markings noted herein may be trademarks of their respective owners.

© 2023 VISHAY INTERTECHNOLOGY, INC. ALL RIGHTS RESERVED