Small Signal Schottky Diodes

FEATURES

- Integrated protection ring against static discharge
- Low capacitance
- Low leakage current
- Low forward voltage drop
- Material categorization: for definitions of compliance please see www.vishay.com/doc?99912

Pb
e2
RoHS COMPLIANT
HALOGEN FREE

LINKS TO ADDITIONAL RESOURCES

3D Models

MECHANICAL DATA

Case: MicroMELF
Weight: approx. 12 mg
Cathode band color: black
Packaging codes/options:
TR3/10K per 13" reel (8 mm tape), 10K/box
TR/2.5K per 7" reel (8 mm tape), 12.5K/box

APPLICATIONS

- HF-detector
- Protection circuit
- Diode for low currents with a low supply voltage
- Small battery charger
- Power supplies
- DC/DC converter for notebooks

PARTS TABLE

PART	TYPE DIFFERENTIATION	ORDERING CODE	CIRCUIT CONFIGURATION	REMARKS
MCL101A	V_R = 60 V, V_F at I_F 1 mA max. 410 mV	MCL101A-TR3 or MCL101A-TR	Single	Tape and reel
MCL101B	V_R = 50 V, V_F at I_F 1 mA max. 400 mV	MCL101B-TR3 or MCL101B-TR	Single	Tape and reel
MCL101C	V_R = 40 V, V_F at I_F 1 mA max. 390 mV	MCL101C-TR3 or MCL101C-TR	Single	Tape and reel

ABSOLUTE MAXIMUM RATINGS (T_{amb} = 25 °C, unless otherwise specified)

PARAMETER	TEST CONDITION	PART	SYMBOL	VALUE	UNIT
Reverse voltage		MCL101A	V_R	60	V
		MCL101B	V_R	50	V
		MCL101C	V_R	40	V
Peak forward surge current	t_p = 10 µs		I_{FSM}	2	A
Repetitive peak forward current			I_{FRM}	150	mA
Forward continuous current			I_F	30	mA

THERMAL CHARACTERISTICS (T_{amb} = 25 °C, unless otherwise specified)

PARAMETER	TEST CONDITION	SYMBOL	VALUE	UNIT
Thermal resistance junction to ambient air	On PC board 50 mm x 50 mm x 1.6 mm	R_{thJA}	320	K/W
Junction temperature		T_j	125	°C
Storage temperature range		T_{stg}	-65 to +150	°C

For technical questions within your region: DiodesAmericas@vishay.com, DiodesAsia@vishay.com, DiodesEurope@vishay.com
THIS DOCUMENT IS SUBJECT TO CHANGE WITHOUT NOTICE. THE PRODUCTS DESCRIBED HEREIN AND THIS DOCUMENT ARE SUBJECT TO SPECIFIC DISCLAIMERS, SET FORTH AT www.vishay.com/doc?91000

ELECTRICAL CHARACTERISTICS (T_{amb} = 25 °C, unless otherwise specified)							
PARAMETER	**TEST CONDITION**	**PART**	**SYMBOL**	**MIN.**	**TYP.**	**MAX.**	**UNIT**
Reverse breakdown voltage	I_R = 10 µA	MCL101A	$V_{(BR)}$	60			V
		MCL101B	$V_{(BR)}$	50			V
		MCL101C	$V_{(BR)}$	40			V
Leakage current	V_R = 50 V	MCL101A	I_R			200	nA
	V_R = 40 V	MCL101B	I_R			200	nA
	V_R = 30 V	MCL101C	I_R			200	nA
Forward voltage drop	I_F = 1 mA	MCL101A	V_F			410	mV
		MCL101B	V_F			400	mV
		MCL101C	V_F			390	mV
	I_F = 15 mA	MCL101A	V_F			1000	mV
		MCL101B	V_F			950	mV
		MCL101C	V_F			900	mV
Diode capacitance	V_R = 0 V, f = 1 MHz	MCL101A	C_D			2	pF
		MCL101B	C_D			2.1	pF
		MCL101C	C_D			2.2	pF

TYPICAL CHARACTERISTICS (T_{amb} = 25 °C, unless otherwise specified)

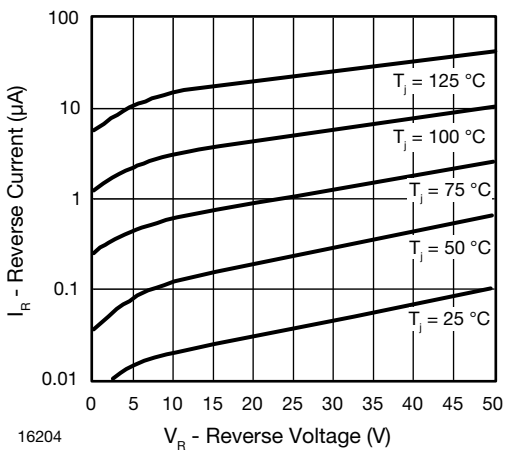

Fig. 1 - Reverse Current vs. Reverse Voltage

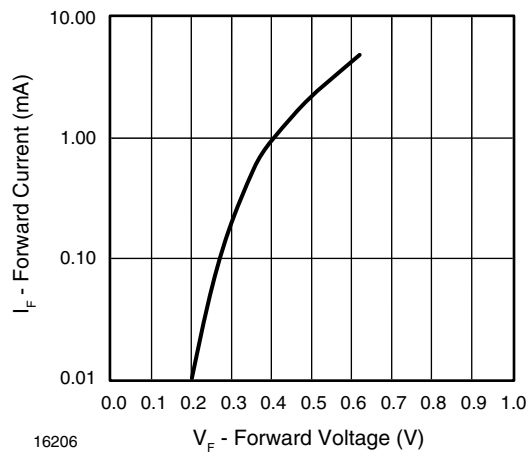

Fig. 3 - Forward Current vs. Forward Voltage

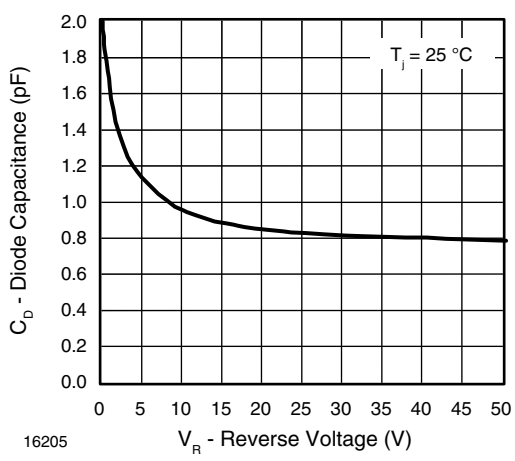

Fig. 2 - Diode Capacitance vs. Reverse Voltage

For technical questions within your region: DiodesAmericas@vishay.com, DiodesAsia@vishay.com, DiodesEurope@vishay.com
THIS DOCUMENT IS SUBJECT TO CHANGE WITHOUT NOTICE. THE PRODUCTS DESCRIBED HEREIN AND THIS DOCUMENT ARE SUBJECT TO SPECIFIC DISCLAIMERS, SET FORTH AT www.vishay.com/doc?91000

PACKAGE DIMENSIONS in millimeters (inches): **MicroMELF**

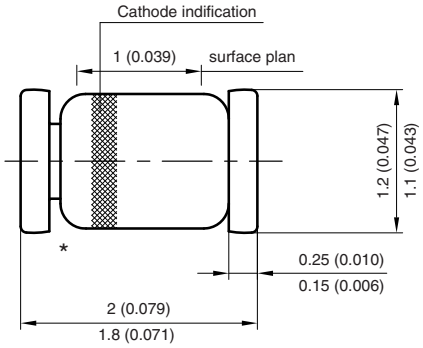

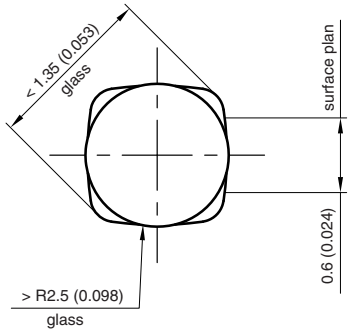

* The gap between plug and glass can be either on cathode or anode side

Foot print recommendation:

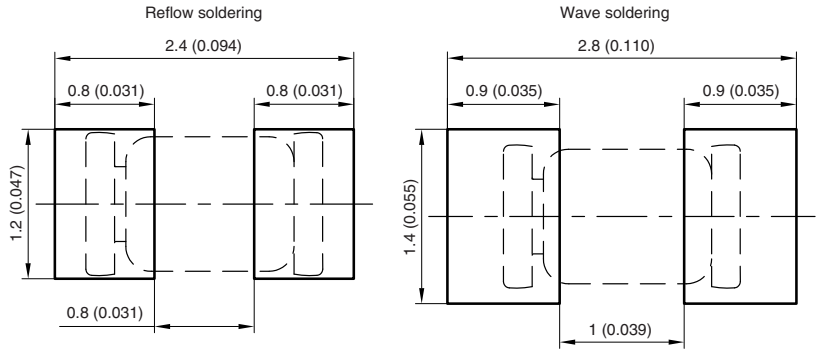

Created - Date: 26.July.1996
Rev. 13 - Date: 07.June.2006
Document no.:6.560-5007.01-4
96 12072

For technical questions within your region: DiodesAmericas@vishay.com, DiodesAsia@vishay.com, DiodesEurope@vishay.com
THIS DOCUMENT IS SUBJECT TO CHANGE WITHOUT NOTICE. THE PRODUCTS DESCRIBED HEREIN AND THIS DOCUMENT ARE SUBJECT TO SPECIFIC DISCLAIMERS, SET FORTH AT www.vishay.com/doc?91000

Disclaimer

ALL PRODUCT, PRODUCT SPECIFICATIONS AND DATA ARE SUBJECT TO CHANGE WITHOUT NOTICE TO IMPROVE RELIABILITY, FUNCTION OR DESIGN OR OTHERWISE.

Vishay Intertechnology, Inc., its affiliates, agents, and employees, and all persons acting on its or their behalf (collectively, “Vishay”), disclaim any and all liability for any errors, inaccuracies or incompleteness contained in any datasheet or in any other disclosure relating to any product.

Vishay makes no warranty, representation or guarantee regarding the suitability of the products for any particular purpose or the continuing production of any product. To the maximum extent permitted by applicable law, Vishay disclaims (i) any and all liability arising out of the application or use of any product, (ii) any and all liability, including without limitation special, consequential or incidental damages, and (iii) any and all implied warranties, including warranties of fitness for particular purpose, non-infringement and merchantability.

Statements regarding the suitability of products for certain types of applications are based on Vishay's knowledge of typical requirements that are often placed on Vishay products in generic applications. Such statements are not binding statements about the suitability of products for a particular application. It is the customer's responsibility to validate that a particular product with the properties described in the product specification is suitable for use in a particular application. Parameters provided in datasheets and / or specifications may vary in different applications and performance may vary over time. All operating parameters, including typical parameters, must be validated for each customer application by the customer's technical experts. Product specifications do not expand or otherwise modify Vishay's terms and conditions of purchase, including but not limited to the warranty expressed therein.

Hyperlinks included in this datasheet may direct users to third-party websites. These links are provided as a convenience and for informational purposes only. Inclusion of these hyperlinks does not constitute an endorsement or an approval by Vishay of any of the products, services or opinions of the corporation, organization or individual associated with the third-party website. Vishay disclaims any and all liability and bears no responsibility for the accuracy, legality or content of the third-party website or for that of subsequent links.

Except as expressly indicated in writing, Vishay products are not designed for use in medical, life-saving, or life-sustaining applications or for any other application in which the failure of the Vishay product could result in personal injury or death. Customers using or selling Vishay products not expressly indicated for use in such applications do so at their own risk. Please contact authorized Vishay personnel to obtain written terms and conditions regarding products designed for such applications.

No license, express or implied, by estoppel or otherwise, to any intellectual property rights is granted by this document or by any conduct of Vishay. Product names and markings noted herein may be trademarks of their respective owners.

© 2023 VISHAY INTERTECHNOLOGY, INC. ALL RIGHTS RESERVED