High Speed Infrared Emitting Diode, 940 nm, Surface Emitter Technology

DESCRIPTION

As part of the SurfLight™ portfolio, the VSMY2943SLX01 is an infrared, 940 nm, side looking emitting diode based on GaAlAs surface emitter chip technology with extreme high radiant intensities, high optical power and high speed, molded in clear, untinted plastic packages (with lens) for surface mounting (SMD).

APPLICATIONS

- Automotive sensor
- Photointerrupters
- Optical switch
- Emitter source for proximity sensors
- IR illumination
- Remote control

FEATURES

- Package type: surface mount
- Package form: side view
- Dimensions (L x W x H in mm): 2.3 x 2.55 x 2.3
- AEC-Q101 qualified
- Peak wavelength: λ_p = 940 nm
- High reliability
- High radiant power
- Very high radiant intensity
- Angle of half intensity: φ = ± 28°
- Suitable for high pulse current operation
- Package matches with detector VEMD2xx3SLX01 and VEMT2xx3SLX01 series
- Floor life: 4 weeks, MSL 2a, acc. J-STD-020
- Material categorization: for definitions of compliance please see www.vishay.com/doc?99912

AUTOMOTIVE GRADE
Pb-free
e3
RoHS COMPLIANT
HALOGEN FREE
GREEN (5-2008)

PRODUCT SUMMARY				
COMPONENT	I_e (mW/sr)	φ (deg)	λ_p (nm)	t_r (ns)
VSMY2943SLX01	50	± 28	940	10

Note

- Test conditions see table “Basic Characteristics“

ORDERING INFORMATION			
ORDERING CODE	PACKAGING	REMARKS	PACKAGE FORM
VSMY2943SLX01	Tape and reel	MOQ: 3000 pcs, 3000 pcs/reel	Side view

Note

- MOQ: minimum order quantity

For technical questions, contact: emittertechsupport@vishay.com
THIS DOCUMENT IS SUBJECT TO CHANGE WITHOUT NOTICE. THE PRODUCTS DESCRIBED HEREIN AND THIS DOCUMENT ARE SUBJECT TO SPECIFIC DISCLAIMERS, SET FORTH AT www.vishay.com/doc?91000

ABSOLUTE MAXIMUM RATINGS (T_{amb} = 25 °C, unless otherwise specified)				
PARAMETER	**TEST CONDITION**	**SYMBOL**	**VALUE**	**UNIT**
Reverse voltage		V_R	5	V
Forward current		I_F	100	mA
Peak forward current	t_p/T = 0.5, t_p = 100 µs	I_{FM}	200	mA
Surge forward current	t_p = 100 µs	I_{FSM}	1	A
Power dissipation		P_V	180	mW
Junction temperature		T_j	100	°C
Operating temperature range		T_{amb}	-40 to +85	°C
Storage temperature range		T_{stg}	-40 to +100	°C
Soldering temperature	Acc. figure 7, J-STD-020	T_{sd}	260	°C
Thermal resistance junction/ambient	J-STD-051, soldered on PCB	R_{thJA}	250	K/W

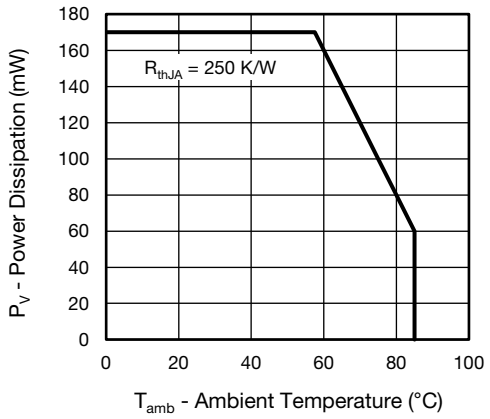

Fig. 1 - Power Dissipation Limit vs. Ambient Temperature

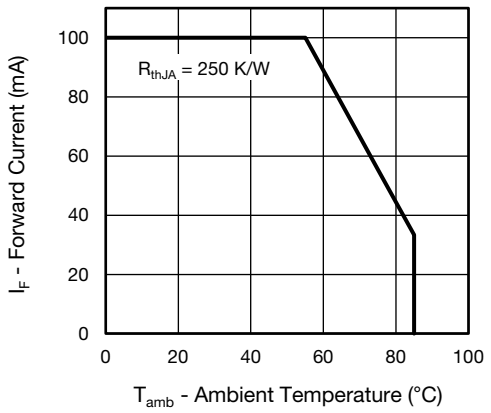

Fig. 2 - Forward Current Limit vs. Ambient Temperature

BASIC CHARACTERISTICS (T_{amb} = 25 °C, unless otherwise specified)						
PARAMETER	**TEST CONDITION**	**SYMBOL**	**MIN.**	**TYP.**	**MAX.**	**UNIT**
Forward voltage	I_F = 100 mA, t_p = 20 ms	V_F	-	1.4	1.8	V
	I_F = 1 A, t_p = 100 µs	V_F	-	2.5	-	V
Temperature coefficient of V_F	I_F = 100 mA	TK_{VF}	-	-0.7	-	mV/K
Reverse current		I_R	not designed for reverse operation			µA
Junction capacitance	V_R = 0 V, f = 1 MHz, E = 0 mW/cm^2	C_J	-	55	-	pF
Radiant intensity	I_F = 100 mA, t_p = 20 ms	I_e	27	50	75	mW/sr
	I_F = 1 A, t_p = 100 µs	I_e	-	350	-	mW/sr
Radiant power	I_F = 100 mA, t_p = 20 ms	ϕ_e	-	55	-	mW
Temperature coefficient of radiant power	I_F = 100 mA	$TK\phi_e$	-	-0.2	-	%/K
Angle of half intensity		φ	-	± 28	-	deg
Peak wavelength	I_F = 100 mA	λ_p	920	940	960	nm
Spectral bandwidth	I_F = 100 mA	$\Delta\lambda$	-	50	-	nm
Temperature coefficient of λ_p	I_F = 100 mA	$TK\lambda_p$	-	0.25	-	nm/K
Rise time	I_F = 100 mA, 10 % to 90 %	t_r	-	10	-	ns
Fall time	I_F = 100 mA, 10 % to 90 %	t_f	-	10	-	ns

For technical questions, contact: emittertechsupport@vishay.com
THIS DOCUMENT IS SUBJECT TO CHANGE WITHOUT NOTICE. THE PRODUCTS DESCRIBED HEREIN AND THIS DOCUMENT ARE SUBJECT TO SPECIFIC DISCLAIMERS, SET FORTH AT www.vishay.com/doc?91000

BASIC CHARACTERISTICS (T_{amb} = 25 °C, unless otherwise specified)

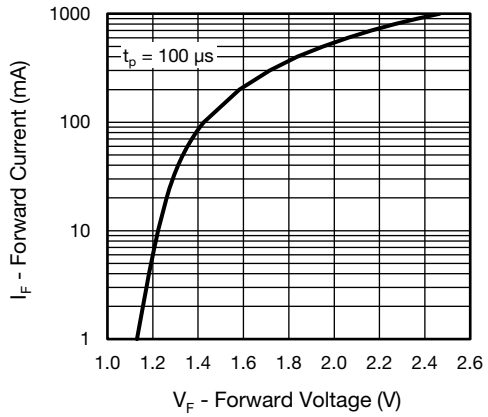

Fig. 3 - Forward Current vs. Forward Voltage

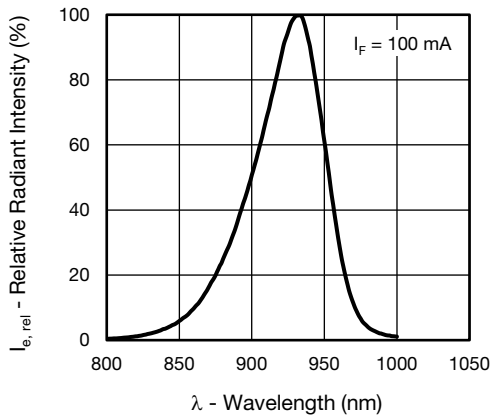

Fig. 5 - Relative Radiant Intensity vs. Wavelength

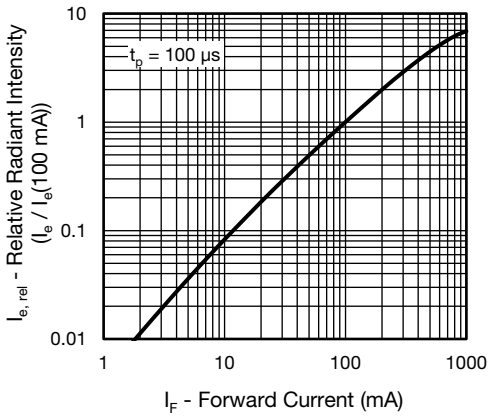

Fig. 4 - Relative Radiant Intensity vs. Forward Current

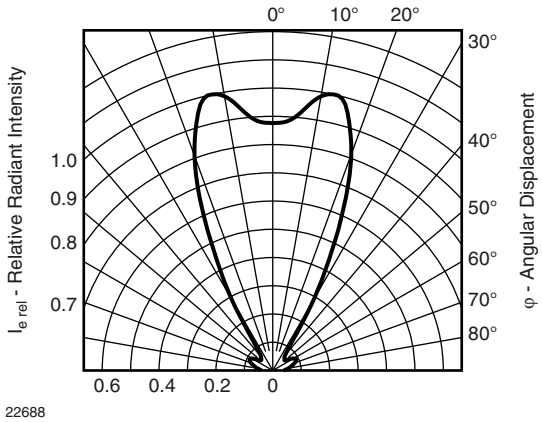

Fig. 6 - Relative Radiant Intensity vs. Angular Displacement

SOLDER PROFILE

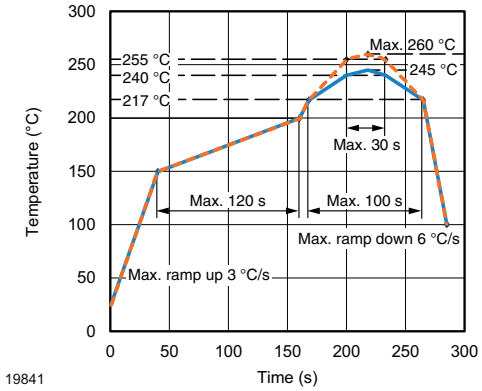

Fig. 7 - Lead (Pb)-free Reflow Solder Profile acc. J-STD-020

DRYPACK

Devices are packed in moisture barrier bags (MBB) to prevent the products from moisture absorption during transportation and storage. Each bag contains a desiccant.

FLOOR LIFE

Floor life (time between soldering and removing from MBB) must not exceed the time indicated on MBB label:

Floor life: 4 weeks

Conditions: T_{amb} < 30 °C, RH < 60 %

Moisture sensitivity level 2a, acc. to J-STD-020.

DRYING

In case of moisture absorption devices should be baked before soldering. Conditions see J-STD-020 or label. Devices taped on reel dry using recommended conditions 192 h at 40 °C (+ 5 °C), RH < 5 %.

For technical questions, contact: emittertechsupport@vishay.com
THIS DOCUMENT IS SUBJECT TO CHANGE WITHOUT NOTICE. THE PRODUCTS DESCRIBED HEREIN AND THIS DOCUMENT ARE SUBJECT TO SPECIFIC DISCLAIMERS, SET FORTH AT www.vishay.com/doc?91000

PACKAGE DIMENSIONS in millimeters

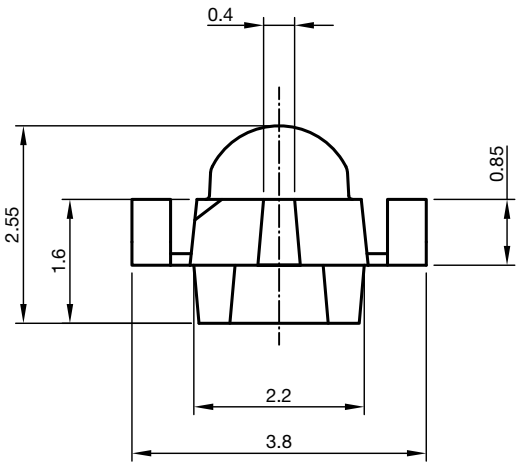

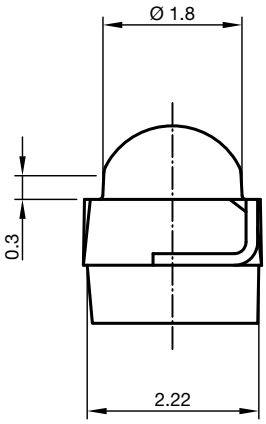

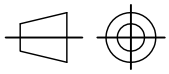

Technical drawings according to DIN specifications

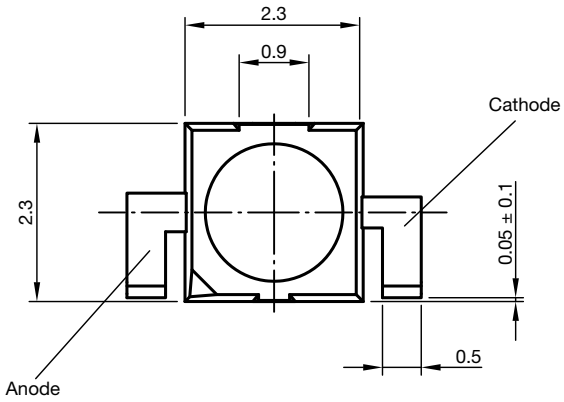

Not indicated tolerances ± 0.2

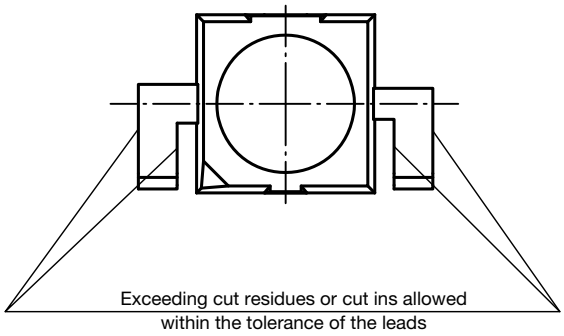

Solder pad proposal
acc. IPC 7351

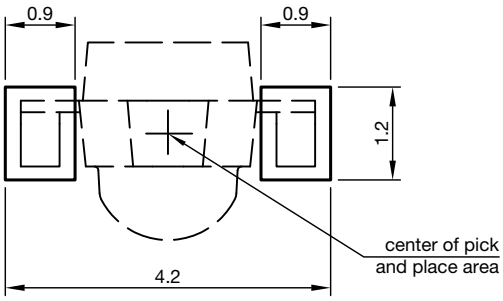

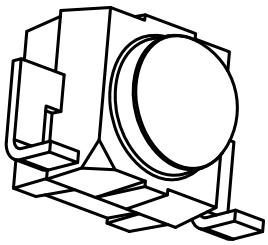

Drawing-No.: 6.544-5410.03-4
Issue: 3; 02.10.15

For technical questions, contact: emittertechsupport@vishay.com
THIS DOCUMENT IS SUBJECT TO CHANGE WITHOUT NOTICE. THE PRODUCTS DESCRIBED HEREIN AND THIS DOCUMENT ARE SUBJECT TO SPECIFIC DISCLAIMERS, SET FORTH AT www.vishay.com/doc?91000

TAPING AND REEL DIMENSIONS in millimeters

Reel

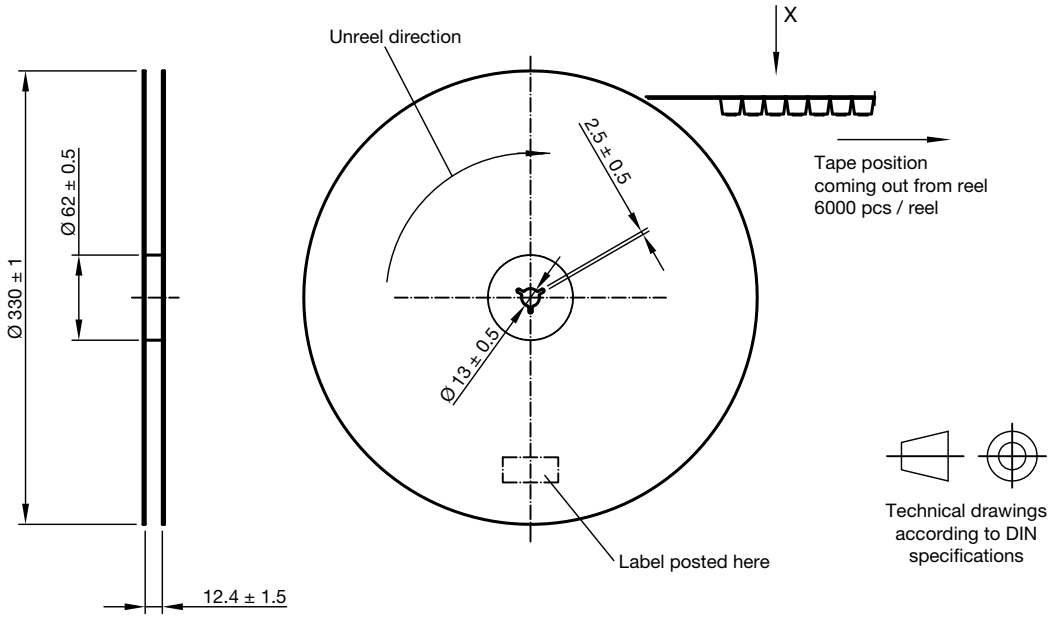

Leader and trailer tape

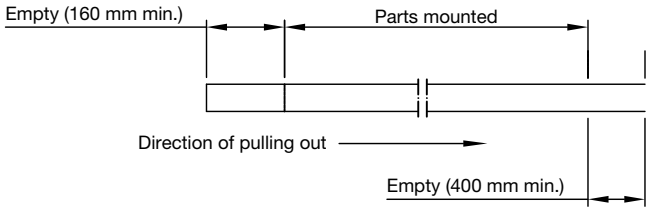

Terminal position in tape

Device	Lead I	Lead II
VSMB2943SLX01	Cathode	Anode
VSMF2893SLX01		
VSMB2948SL		
VEMD2023SLX01		
VEMD2523SLX01		
VEMT2023SLX01	Collector	Emitter
VEMT2523SLX01		
VSMY2853SL	Anode	Cathode
VSMY2943SL		
VSMY294310SL		

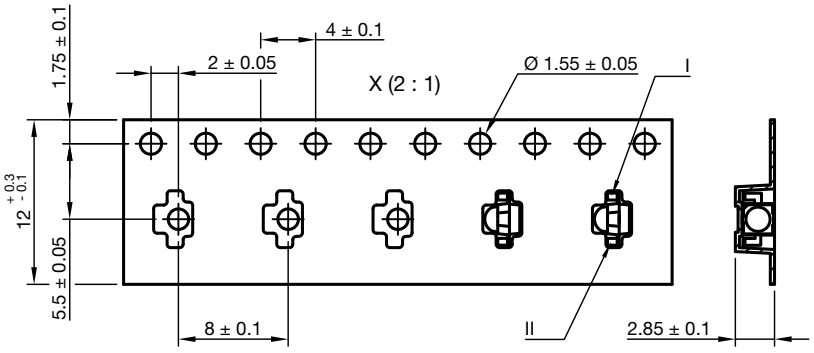

Drawing-No.: 9.800-5123.01-4
Issue: 4; 02.10.15

For technical questions, contact: emittertechsupport@vishay.com
THIS DOCUMENT IS SUBJECT TO CHANGE WITHOUT NOTICE. THE PRODUCTS DESCRIBED HEREIN AND THIS DOCUMENT ARE SUBJECT TO SPECIFIC DISCLAIMERS, SET FORTH AT www.vishay.com/doc?91000

Disclaimer

ALL PRODUCT, PRODUCT SPECIFICATIONS AND DATA ARE SUBJECT TO CHANGE WITHOUT NOTICE TO IMPROVE RELIABILITY, FUNCTION OR DESIGN OR OTHERWISE.

Vishay Intertechnology, Inc., its affiliates, agents, and employees, and all persons acting on its or their behalf (collectively, “Vishay”), disclaim any and all liability for any errors, inaccuracies or incompleteness contained in any datasheet or in any other disclosure relating to any product.

Vishay makes no warranty, representation or guarantee regarding the suitability of the products for any particular purpose or the continuing production of any product. To the maximum extent permitted by applicable law, Vishay disclaims (i) any and all liability arising out of the application or use of any product, (ii) any and all liability, including without limitation special, consequential or incidental damages, and (iii) any and all implied warranties, including warranties of fitness for particular purpose, non-infringement and merchantability.

Statements regarding the suitability of products for certain types of applications are based on Vishay's knowledge of typical requirements that are often placed on Vishay products in generic applications. Such statements are not binding statements about the suitability of products for a particular application. It is the customer's responsibility to validate that a particular product with the properties described in the product specification is suitable for use in a particular application. Parameters provided in datasheets and / or specifications may vary in different applications and performance may vary over time. All operating parameters, including typical parameters, must be validated for each customer application by the customer's technical experts. Product specifications do not expand or otherwise modify Vishay's terms and conditions of purchase, including but not limited to the warranty expressed therein.

Hyperlinks included in this datasheet may direct users to third-party websites. These links are provided as a convenience and for informational purposes only. Inclusion of these hyperlinks does not constitute an endorsement or an approval by Vishay of any of the products, services or opinions of the corporation, organization or individual associated with the third-party website. Vishay disclaims any and all liability and bears no responsibility for the accuracy, legality or content of the third-party website or for that of subsequent links.

Except as expressly indicated in writing, Vishay products are not designed for use in medical, life-saving, or life-sustaining applications or for any other application in which the failure of the Vishay product could result in personal injury or death. Customers using or selling Vishay products not expressly indicated for use in such applications do so at their own risk. Please contact authorized Vishay personnel to obtain written terms and conditions regarding products designed for such applications.

No license, express or implied, by estoppel or otherwise, to any intellectual property rights is granted by this document or by any conduct of Vishay. Product names and markings noted herein may be trademarks of their respective owners.

© 2023 VISHAY INTERTECHNOLOGY, INC. ALL RIGHTS RESERVED