Enhanced isoCink+™ Bridge Rectifiers

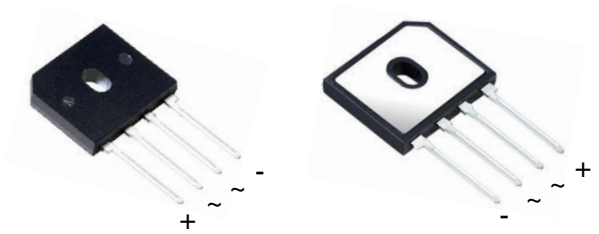

isoCink+™
Case Style BU

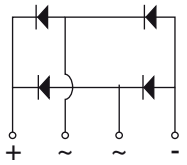

FEATURES

- UL recognition file number E312394
- Thin single in-line package
- Glass passivated chip junction
- Superior thermal conductivity
- Solder dip 275 °C max. 10 s, per JESD 22-B106
- Material categorization: for definitions of compliance please see www.vishay.com/doc?99912

RoHS COMPLIANT
HALOGEN FREE Available

TYPICAL APPLICATIONS

General purpose use in AC/DC bridge full wave rectification for switching power supply, home appliances and white-goods applications.

MECHANICAL DATA

Case: BU

Molding compound meets UL 94 V-0 flammability rating
Base P/N-E3 - RoHS-compliant, commercial grade
Base P/N-M3 - halogen-free, RoHS-compliant, and commercial grade

Terminals: matte tin plated leads, solderable per J-STD-002 and JESD 22-B102
E3 and M3 suffix meet JESD 201 class 1A whisker test

Polarity: as marked on body

Mounting Torque: 10 cm-kg (8.8 inches-lbs) max.

Recommended Torque: 5.7 cm-kg (5 inches-lbs)

LINKS TO ADDITIONAL RESOURCES

3D Models

PRIMARY CHARACTERISTICS	
$I_{F(AV)}$	20 A
V_{RRM}	600 V, 800 V, 1000 V
I_{FSM}	240 A
I_R	5 µA
V_F at I_F = 10 A	0.85 V
T_J max.	150 °C
Package	BU
Circuit configurations	In-line

MAXIMUM RATINGS (T_A = 25 °C unless otherwise noted)

PARAMETER		SYMBOL	BU2006	BU2008	BU2010	UNIT
Maximum repetitive peak reverse voltage		V_{RRM}	600	800	1000	V
Average rectified forward current (Fig. 1, 2)	T_C = 61 °C (1)	I_O	20			A
	T_A = 25 °C (2)		3.5			
Non-repetitive peak forward surge current 8.3 ms single sine-wave, T_J = 25 °C		I_{FSM}	240			A
Rating for fusing (t < 8.3 ms) T_J = 25 °C		I^2t	239			A^2s
Operating junction and storage temperature range		T_J, T_{STG}	-55 to +150			°C

Notes
(1) With 60 W air cooled heatsink
(2) Without heatsink, free air

For technical questions within your region: DiodesAmericas@vishay.com, DiodesAsia@vishay.com, DiodesEurope@vishay.com
THIS DOCUMENT IS SUBJECT TO CHANGE WITHOUT NOTICE. THE PRODUCTS DESCRIBED HEREIN AND THIS DOCUMENT ARE SUBJECT TO SPECIFIC DISCLAIMERS, SET FORTH AT www.vishay.com/doc?91000

ELECTRICAL CHARACTERISTICS (T_A = 25 °C unless otherwise noted)						
PARAMETER	**TEST CONDITIONS**		**SYMBOL**	**TYP.**	**MAX.**	**UNIT**
Maximum instantaneous forward voltage per diode [1]	I_F = 10 A	T_A = 25 °C	V_F	0.95	1.05	V
		T_A = 125 °C		0.85	0.95	
Maximum reverse current per diode	rated V_R	T_A = 25 °C	I_R	-	5.0	μA
		T_A = 125 °C		110	350	
Typical junction capacitance per diode	4.0 V, 1 MHz		C_J	95	-	pF

Note

[1] Pulse test: 300 μs pulse width, 1 % duty cycle

THERMAL CHARACTERISTICS (T_A = 25 °C unless otherwise noted)					
PARAMETER	**SYMBOL**	**BU2006**	**BU2008**	**BU2010**	**UNIT**
Typical thermal resistance	$R_{\theta JC}$ [1]	2.4			°C/W
	$R_{\theta JA}$ [2]	20			

Notes

[1] With 60 W air cooled heatsink
[2] Without heatsink, free air

ORDERING INFORMATION (Example)				
PREFERRED P/N	**UNIT WEIGHT (g)**	**PREFERRED PACKAGE CODE**	**BASE QUANTITY**	**DELIVERY MODE**
BU2006-E3/45	4.76	45	20	Tube
BU2006-E3/51	4.76	51	250	Paper tray
BU2006-M3/45	4.76	45	20	Tube

For technical questions within your region: DiodesAmericas@vishay.com, DiodesAsia@vishay.com, DiodesEurope@vishay.com
THIS DOCUMENT IS SUBJECT TO CHANGE WITHOUT NOTICE. THE PRODUCTS DESCRIBED HEREIN AND THIS DOCUMENT ARE SUBJECT TO SPECIFIC DISCLAIMERS, SET FORTH AT www.vishay.com/doc?91000

RATINGS AND CHARACTERISTICS CURVES (T_A = 25 °C unless otherwise specified)

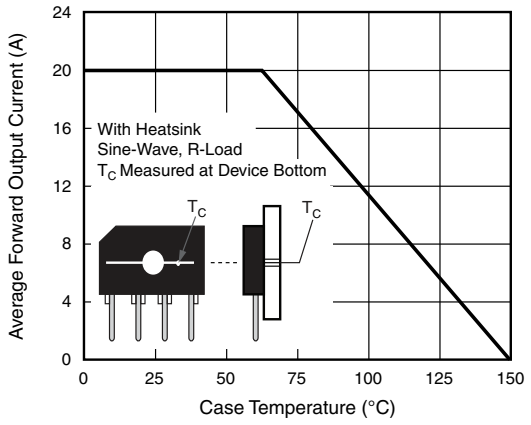

Fig. 1 - Derating Curve Output Rectified Current

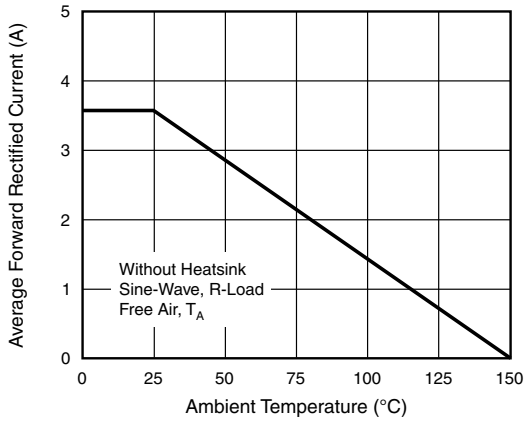

Fig. 2 - Forward Current Derating Curve

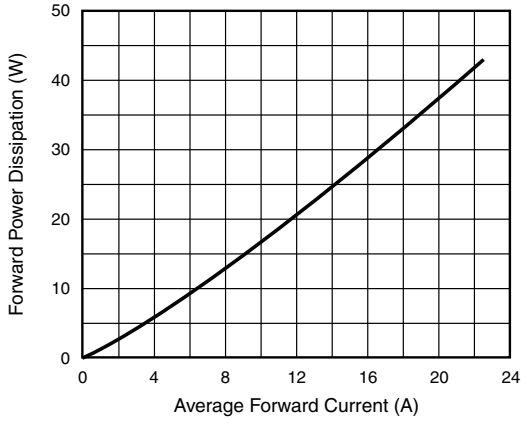

Fig. 3 - Forward Power Dissipation

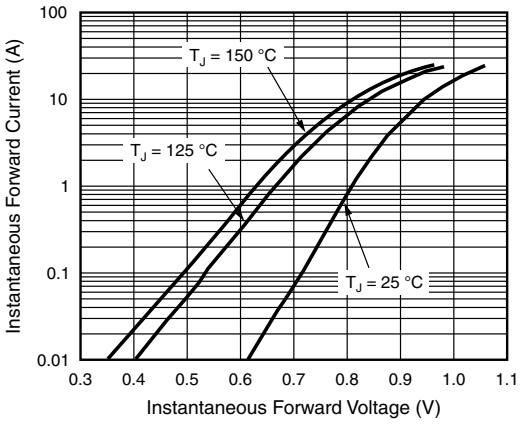

Fig. 4 - Typical Forward Characteristics Per Diode

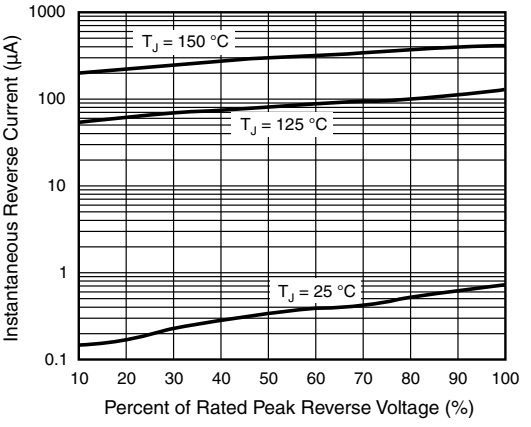

Fig. 5 - Typical Reverse Characteristics Per Diode

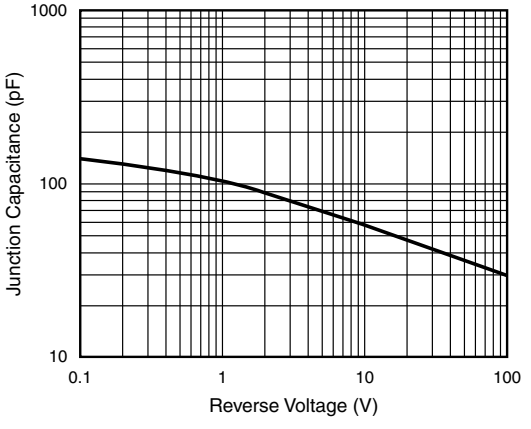

Fig. 6 - Typical Junction Capacitance Per Diode

For technical questions within your region: DiodesAmericas@vishay.com, DiodesAsia@vishay.com, DiodesEurope@vishay.com
THIS DOCUMENT IS SUBJECT TO CHANGE WITHOUT NOTICE. THE PRODUCTS DESCRIBED HEREIN AND THIS DOCUMENT ARE SUBJECT TO SPECIFIC DISCLAIMERS, SET FORTH AT www.vishay.com/doc?91000

PACKAGE OUTLINE DIMENSIONS in inches (millimeters)

Case Type BU

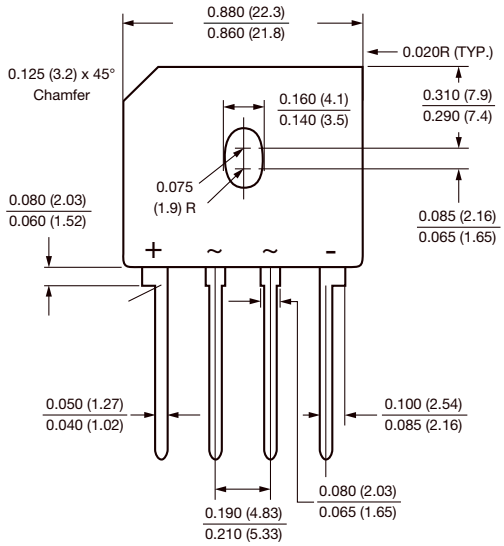

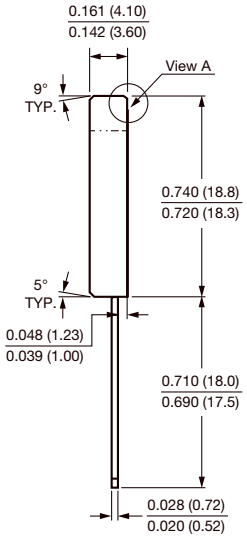

Polarity shown on front side of case, positive lead beveled corner

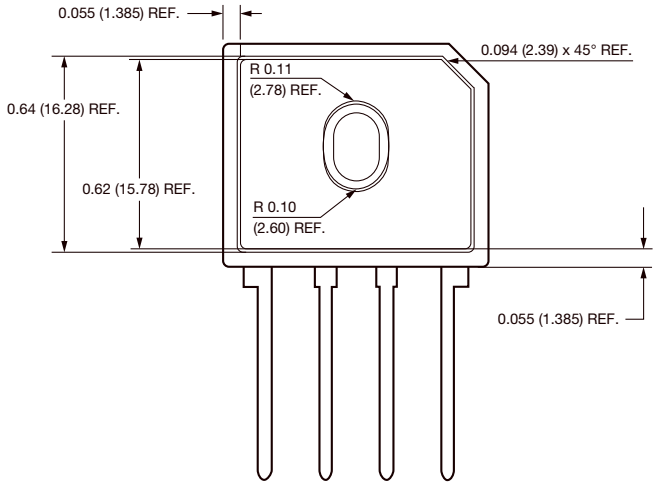

For technical questions within your region: DiodesAmericas@vishay.com, DiodesAsia@vishay.com, DiodesEurope@vishay.com
THIS DOCUMENT IS SUBJECT TO CHANGE WITHOUT NOTICE. THE PRODUCTS DESCRIBED HEREIN AND THIS DOCUMENT ARE SUBJECT TO SPECIFIC DISCLAIMERS, SET FORTH AT www.vishay.com/doc?91000

APPLICATION NOTE

1. Device UL approved for safety use dielectric strength of 1500 V
2. If device is mounted in Floating Ground (F. G.) application, insulator is recommended to use to meet safety requirement.
3. Heat sink shape recommendation:

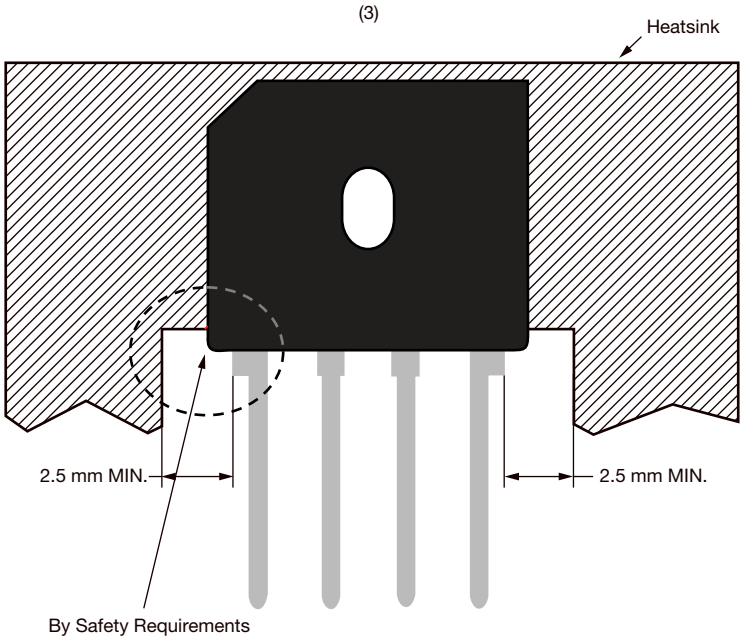

For technical questions within your region: DiodesAmericas@vishay.com, DiodesAsia@vishay.com, DiodesEurope@vishay.com
THIS DOCUMENT IS SUBJECT TO CHANGE WITHOUT NOTICE. THE PRODUCTS DESCRIBED HEREIN AND THIS DOCUMENT ARE SUBJECT TO SPECIFIC DISCLAIMERS, SET FORTH AT www.vishay.com/doc?91000

Disclaimer

ALL PRODUCT, PRODUCT SPECIFICATIONS AND DATA ARE SUBJECT TO CHANGE WITHOUT NOTICE TO IMPROVE RELIABILITY, FUNCTION OR DESIGN OR OTHERWISE.

Vishay Intertechnology, Inc., its affiliates, agents, and employees, and all persons acting on its or their behalf (collectively, “Vishay”), disclaim any and all liability for any errors, inaccuracies or incompleteness contained in any datasheet or in any other disclosure relating to any product.

Vishay makes no warranty, representation or guarantee regarding the suitability of the products for any particular purpose or the continuing production of any product. To the maximum extent permitted by applicable law, Vishay disclaims (i) any and all liability arising out of the application or use of any product, (ii) any and all liability, including without limitation special, consequential or incidental damages, and (iii) any and all implied warranties, including warranties of fitness for particular purpose, non-infringement and merchantability.

Statements regarding the suitability of products for certain types of applications are based on Vishay's knowledge of typical requirements that are often placed on Vishay products in generic applications. Such statements are not binding statements about the suitability of products for a particular application. It is the customer's responsibility to validate that a particular product with the properties described in the product specification is suitable for use in a particular application. Parameters provided in datasheets and / or specifications may vary in different applications and performance may vary over time. All operating parameters, including typical parameters, must be validated for each customer application by the customer's technical experts. Product specifications do not expand or otherwise modify Vishay's terms and conditions of purchase, including but not limited to the warranty expressed therein.

Hyperlinks included in this datasheet may direct users to third-party websites. These links are provided as a convenience and for informational purposes only. Inclusion of these hyperlinks does not constitute an endorsement or an approval by Vishay of any of the products, services or opinions of the corporation, organization or individual associated with the third-party website. Vishay disclaims any and all liability and bears no responsibility for the accuracy, legality or content of the third-party website or for that of subsequent links.

Except as expressly indicated in writing, Vishay products are not designed for use in medical, life-saving, or life-sustaining applications or for any other application in which the failure of the Vishay product could result in personal injury or death. Customers using or selling Vishay products not expressly indicated for use in such applications do so at their own risk. Please contact authorized Vishay personnel to obtain written terms and conditions regarding products designed for such applications.

No license, express or implied, by estoppel or otherwise, to any intellectual property rights is granted by this document or by any conduct of Vishay. Product names and markings noted herein may be trademarks of their respective owners.

© 2023 VISHAY INTERTECHNOLOGY, INC. ALL RIGHTS RESERVED