High Speed Optocoupler, 10 MBd, SOIC-8 Package

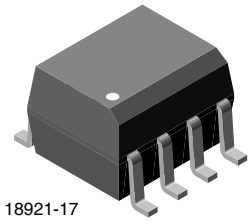
18921-17

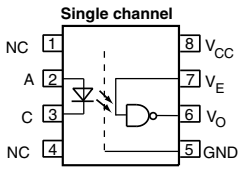

VO0600T, VO0601T, VO0611T

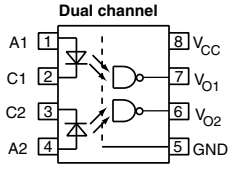

VO0630T, VO0631T, VO0661T

18921-26

FEATURES

- Choice of CMR performance of 15 kV/µs, 5 kV/µs, and 1 kV/µs
- High speed: 10 MBd typical
- + 5 V CMOS compatibility
- Pure tin leads
- Guaranteed AC and DC performance over temperature: - 40 °C to + 100 °C temp. range
- Meets IEC 60068-2-42 (SO_2) and IEC 60068-2-43 (H_2S) requirements
- Low input current capability: 5 mA
- Material categorization: For definitions of compliance please see www.vishay.com/doc?99912

Pb-free
e3
RoHS COMPLIANT

DESCRIPTION

The VO06xxT family are single and dual channel 10 MBd optocoupler utilizing a high efficient input LED coupled with an integrated optical photodiode IC detector. The detector has an open drain NMOS-transister output, providing less leakage compared to an open collector Schottky clamped transister output. For the single channel type, an enable function on pin 7 allows the detector to be strobed. The internal shield provides a guaranteed common mode transient immunity of 5 kV/µs for the VO0601T and VO0631T and 15 kV/µs for the VO0611T and VO0661T. The use of a 0.1 µF bypass capacitor connected between pin 5 and 8 is recommended.

APPLICATIONS

- Microprocessor system M interface
- PLC, ATE input/output isolation
- Computer peripheral interface: SPI
- Digital fieldbus isolation: CC-Link, DeviceNet, profibus, SDS
- High speed A/D and D/A conversion
- AC plasma display panel level shifting
- Multiplexed data transmission
- Digital control power supply
- Ground loop elimination

AGENCY APPROVALS

- UL1577, file no. E52744
- cUL-file no. E52744, equivalent to CSA bulletin 5A
- DIN EN 60747-5-5 (VDE 0884-5), available with option 1

ORDERING INFORMATION

V O 0 6 # # - X 0 0 1 T

PART NUMBER — PACKAGE OPTION — TAPE AND REEL

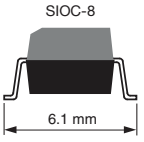

AGENCY CERTIFIED/PACKAGE	1 CHANNEL			2 CHANNELS		
	CMR (kV/µs)			CMR (kV/µs)		
UL, cUL	**1**	**5**	**15**	**1**	**5**	**15**
SOIC-8	VO0600T	VO0601T	VO0611T	VO0630T	VO0631T	VO0661T
UL, cUL, VDE	**1**	**5**	**15**	**1**	**5**	**15**
SOIC-8	-	VO0601-X001T	-	-	VO0631-X001T	-

For technical questions, contact: optocoupleranswers@vishay.com
THIS DOCUMENT IS SUBJECT TO CHANGE WITHOUT NOTICE. THE PRODUCTS DESCRIBED HEREIN AND THIS DOCUMENT ARE SUBJECT TO SPECIFIC DISCLAIMERS, SET FORTH AT www.vishay.com/doc?91000

TRUTH TABLE (positive logic)		
LED	**ENABLE** [1]	**OUTPUT**
On	H	L
Off	H	H
On	L	H
Off	L	H
On	NC	L
Off	NC	H

Note

[1] Only applicable for single channel devices

ABSOLUTE MAXIMUM RATINGS (T_{amb} = 25 °C, unless otherwise specified)				
PARAMETER	**TEST CONDITION**	**SYMBOL**	**VALUE**	**UNIT**
INPUT				
Average forward current (single channel)		I_F	20	mA
Average forward current (dual channel)		I_F	15	mA
Reverse input voltage		V_R	5	V
Enable input voltage (single channel)		V_E	V_{CC} + 0.5 V	V
Enable input current (single channel)		I_E	5	mA
Surge current	t = 100 µs	I_{FSM}	200	mA
Output power dissipation (single channel)		P_{diss}	35	mW
Output power dissipation (per channel for dual channel)		P_{diss}	25	mW
OUTPUT				
Supply voltage	1 min maximum	V_{CC}	7	V
Output current		I_O	50	mA
Output voltage		V_O	7	V
Output power dissipation (single channel)		P_{diss}	85	mW
Output power dissipation (per channel for dual channel)		P_{diss}	60	mW
COUPLER				
Isolation test voltage	t = 1 s	V_{ISO}	4000	V_{RMS}
Storage temperature		T_{stg}	- 55 to + 150	°C
Operating temperature		T_{amb}	- 40 to + 100	°C
Lead solder temperature	for 10 s		260	°C
Solder reflow temperature [1]	for 1 min		260	°C

Notes

- Stresses in excess of the absolute maximum ratings can cause permanent damage to the device. Functional operation of the device is not implied at these or any other conditions in excess of those given in the operational sections of this document. Exposure to absolute maximum ratings for extended periods of the time can adversely affect reliability.

[1] Refer to reflow profile for soldering conditions for surface mounted devices.

RECOMMENDED OPERATING CONDITION						
PARAMETER	**TEST CONDITION**	**SYMBOL**	**MIN.**	**TYP.**	**MAX.**	**UNIT**
Operating temperature		T_{amb}	- 40		100	°C
Supply voltage		V_{CC}	4.5		5.5	V
Input current low level		I_{FL}	0		250	µA
Input current high level		I_{FH}	5		15	mA
Output pull up resistor		R_L	330		4K	Ω
Logic high enable voltage		V_{EH}	2		V_{CC}	V
Logic low enable voltage		V_{EL}	0.0		0.8	V
Fanout	R_L = 1 kΩ	N			5	-

For technical questions, contact: optocoupleranswers@vishay.com
THIS DOCUMENT IS SUBJECT TO CHANGE WITHOUT NOTICE. THE PRODUCTS DESCRIBED HEREIN AND THIS DOCUMENT ARE SUBJECT TO SPECIFIC DISCLAIMERS, SET FORTH AT www.vishay.com/doc?91000

ELECTRICAL CHARACTERISTICS (T_{amb} = 25 °C, unless otherwise specified)						
PARAMETER	**TEST CONDITION**	**SYMBOL**	**MIN.**	**TYP.**	**MAX.**	**UNIT**
INPUT						
Input forward voltage	I_F = 10 mA	V_F	1.1	1.4	1.7	V
Reverse current	V_R = 5 V	I_R		0.01	10	µA
Input capacitance	f = 1 MHz, V_F = 0 V	C_I		55		pF
OUTPUT						
High level supply current (single channel)	V_E = 0.5 V, I_F = 0 mA	I_{CCH}		4.1	7	mA
	V_E = V_{CC}, I_F = 0 mA	I_{CCH}		3.3	6	mA
High level supply current (dual channel)	I_F = 10 mA	I_{CCH}		6.5	12	mA
Low level supply current (single channel)	V_E = 0.5 V, I_F = 10 mA	I_{CCL}		4	7	mA
	V_E = V_{CC}, I_F = 10 mA	I_{CCL}		3.3	6	mA
Low level supply current (dual channel)	I_F = 10 mA	I_{CCL}		6.5	12	mA
High level output current	V_E = 2 V, V_O = 5.5 V, I_F = 250 µA	I_{OH}		0.002	1	µA
Low level output voltage	V_E = 2 V, I_F = 5 mA, I_{OL} (sinking) = 13 mA	V_{OL}		0.2	0.6	V
Input threshold current	V_E = 2 V, V_O = 5.5 V, I_{OL} (sinking) = 13 mA	I_{TH}		2.4	5	mA
High level enable current		I_{EH}		- 0.6	- 1.6	mA
Low level enable current		I_{EL}		- 0.8	- 1.6	mA
High level enable voltage		V_{EH}	2			V
Low level enable voltage		V_{EL}			0.8	V

Note

- Minimum and maximum values are testing requirements. Typical values are characteristics of the device and are the result of engineering evaluation. Typical values are for information only and are not part of the testing requirements.

SWITCHING CHARACTERISTICS						
PARAMETER	**TEST CONDITION**	**SYMBOL**	**MIN.**	**TYP.**	**MAX.**	**UNIT**
Propagation delay time to high output level	R_L = 350 Ω, C_L = 15 pF	t_{PLH}	20	48	100	ns
Propagation delay time to low output level	R_L = 350 Ω, C_L = 15 pF	t_{PHL}	25	50	100	ns
Pulse width distortion	R_L = 350 Ω, C_L = 15 pF	$\lvert t_{PHL} - t_{PLH} \rvert$		2.9	35	ns
Propagation delay skew	R_L = 350 Ω, C_L = 15 pF	t_{PSK}		8	40	ns
Output rise time (10 to 90 %)	R_L = 350 Ω, C_L = 15 pF	t_r		23		ns
Output fall time (90 to 10 %)	R_L = 350 Ω, C_L = 15 pF	t_f		7		ns
Propagation delay time of enable from V_{EH} to V_{EL}	R_L = 350 Ω, C_L = 15 pF, V_{EL} = 0 V, V_{EH} = 3 V	t_{ELH}		12		ns
Propagation delay time of enable from V_{EL} to V_{EH}	R_L = 350 Ω, C_L = 15 pF, V_{EL} = 0 V, V_{EH} = 3 V	t_{EHL}		11		ns

Note

- Over recommended temperature (T_A = - 40 °C to + 100 °C), V_{CC} = 5 V, I_F = 7.5 mA unless otherwise specified. All typicals at T_A = 25 °C, V_{CC} = 5 V.

For technical questions, contact: optocoupleranswers@vishay.com
THIS DOCUMENT IS SUBJECT TO CHANGE WITHOUT NOTICE. THE PRODUCTS DESCRIBED HEREIN AND THIS DOCUMENT ARE SUBJECT TO SPECIFIC DISCLAIMERS, SET FORTH AT www.vishay.com/doc?91000

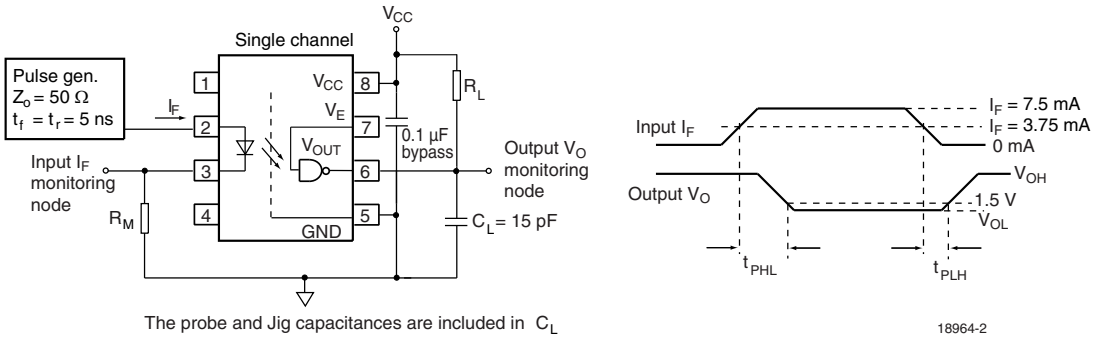

Fig. 1 - Single Channel Test Circuit for t_{PLH}, t_{PHL}, t_r and t_f

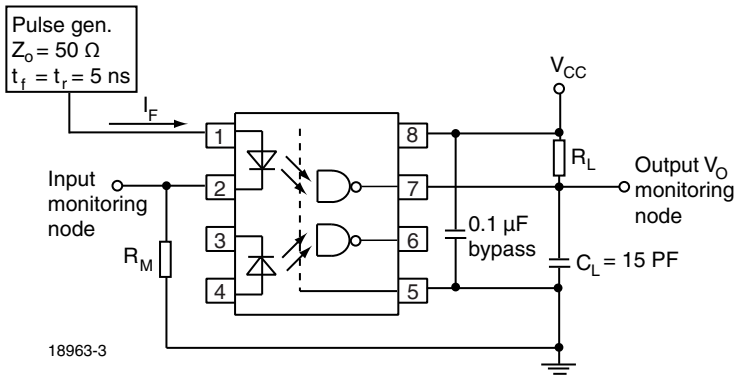

Fig. 2 - Dual Channel Test Circuit for t_{PLH}, t_{PHL}, t_r and t_f

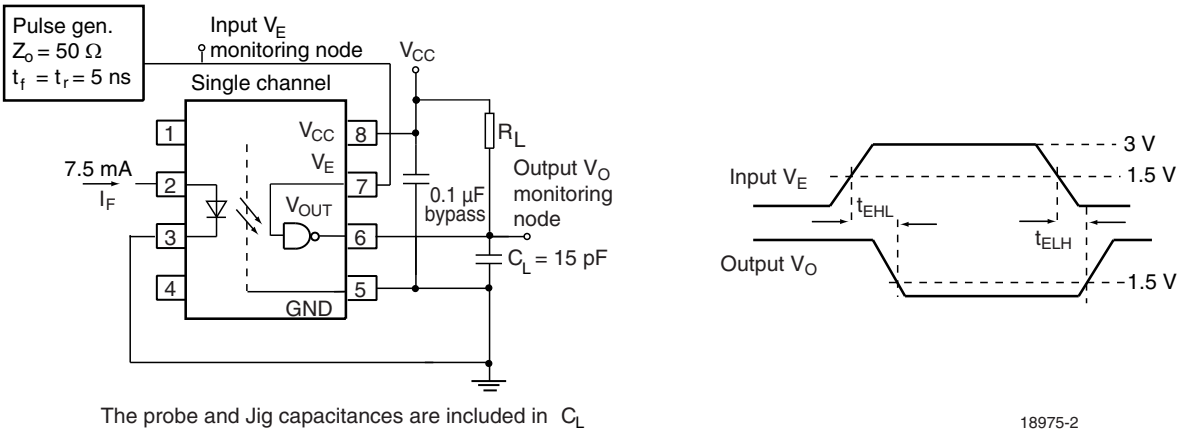

Fig. 3 - Single Channel Test Circuit for t_{EHL}, t_{ELH}

For technical questions, contact: optocoupleranswers@vishay.com
THIS DOCUMENT IS SUBJECT TO CHANGE WITHOUT NOTICE. THE PRODUCTS DESCRIBED HEREIN AND THIS DOCUMENT ARE SUBJECT TO SPECIFIC DISCLAIMERS, SET FORTH AT www.vishay.com/doc?91000

COMMON MODE TRANSIENT IMMUNITY						
PARAMETER	TEST CONDITION	SYMBOL	MIN.	TYP.	MAX.	UNIT
Common mode transient immunity (high)	$\lvert V_{CM}\rvert$ = 10 V, V_{CC} = 5 V, I_F = 0 mA, $V_{O(min)}$ = 2 V, R_L = 350 Ω, T_{amb} = 25 °C(1)	$\lvert CM_H\rvert$	1000			V/µs
	$\lvert V_{CM}\rvert$ = 50 V, V_{CC} = 5 V, I_F = 0 mA, $V_{O(min)}$ = 2 V, R_L = 350 Ω, T_{amb} = 25 °C(2)	$\lvert CM_H\rvert$	5000	10 000		V/µs
	$\lvert V_{CM}\rvert$ = 1 kV, V_{CC} = 5 V, I_F = 0 mA, $V_{O(min)}$ = 2 V, R_L = 350 Ω, T_{amb} = 25 °C(3)	$\lvert CM_H\rvert$	15 000	25 000		V/µs
Common mode transient immunity (low)	$\lvert V_{CM}\rvert$ = 10 V, V_{CC} = 5 V, I_F = 7.5 mA, $V_{O(max)}$ = 0.8 V, R_L = 350 Ω, T_{amb} = 25 °C(1)	$\lvert CM_L\rvert$	1000			V/µs
	$\lvert V_{CM}\rvert$ = 50 V, V_{CC} = 5 V, I_F = 7.5 mA, $V_{O(max)}$ = 0.8 V, R_L = 350 Ω, T_{amb} = 25 °C(2)	$\lvert CM_L\rvert$	5000	10 000		V/µs
	$\lvert V_{CM}\rvert$ = 1 kV, V_{CC} = 5 V, I_F = 7.5 mA, $V_{O(max)}$ = 0.8 V, R_L = 350 Ω, T_{amb} = 25 °C(3)	$\lvert CM_L\rvert$	15 000	25 000		V/µs

Notes

(1) For VO0600T and VO0630T
(2) For VO0601T and VO0631T
(3) For VO0611T and VO0661T

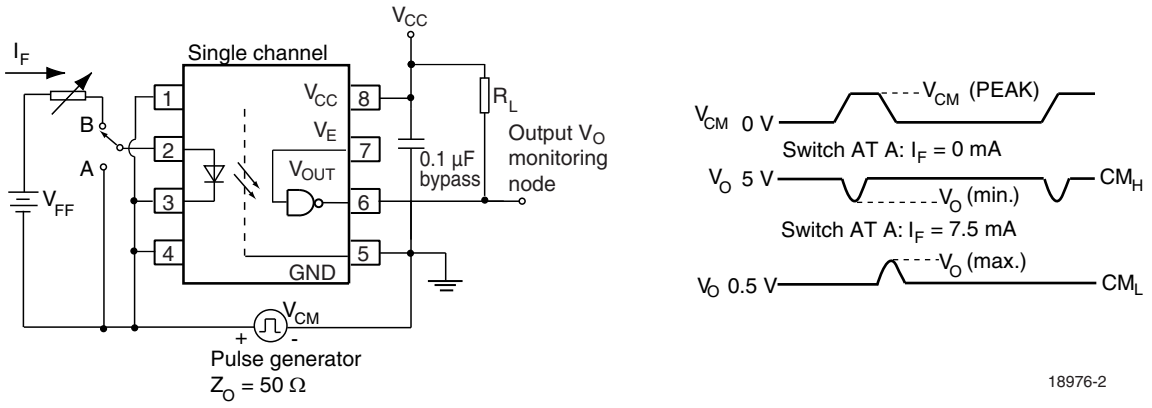

Fig. 4 - Single Channel Test Circuit for Common Mode Transient Immunity

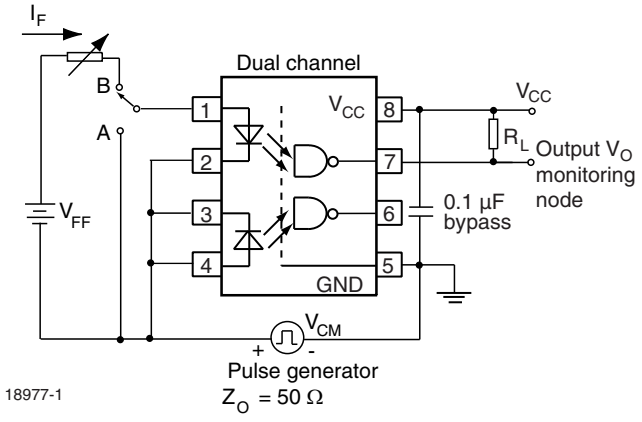

Fig. 5 - Dual Channel Test Circuit for Common Mode Transient Immunity

For technical questions, contact: optocoupleranswers@vishay.com
THIS DOCUMENT IS SUBJECT TO CHANGE WITHOUT NOTICE. THE PRODUCTS DESCRIBED HEREIN AND THIS DOCUMENT ARE SUBJECT TO SPECIFIC DISCLAIMERS, SET FORTH AT www.vishay.com/doc?91000

SAFETY AND INSULATION RATINGS						
PARAMETER	TEST CONDITION	SYMBOL	MIN.	TYP.	MAX.	UNIT
Climatic classification	according to IEC 68 part 1			55/100/21		
Comparative tracking index		CTI	175		399	
V_{IOTM}			6000			V
V_{IORM}			560			V
P_{SO}					350	mW
I_{SI}					150	mA
T_{SI}					165	°C
Creepage			4			mm
Clearance			4			mm
Insulation thickness			0.2			mm

Note

- As per IEC 60747-5-5, 7.4.3.8.1, this optocoupler is suitable for “safe electrical insulation” only within the safety ratings. Compliance with the safety ratings shall be ensured by means of prodective circuits.

TYPICAL CHARACTERISTICS (T_{amb} = 25 °C, unless otherwise specified)

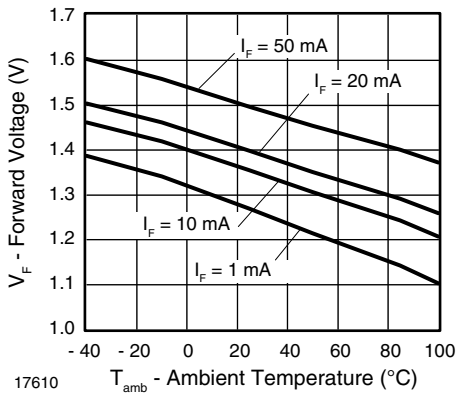

Fig. 6 - Forward Voltage vs. Ambient Temperature

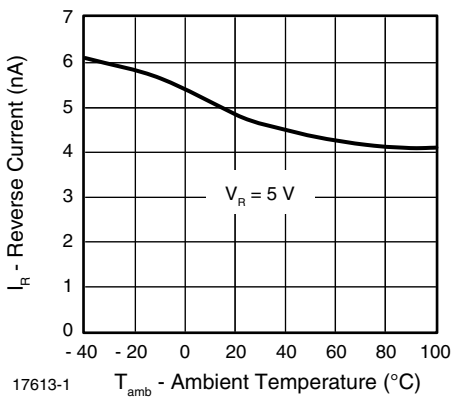

Fig. 8 - Reverse Current vs. Ambient Temperature

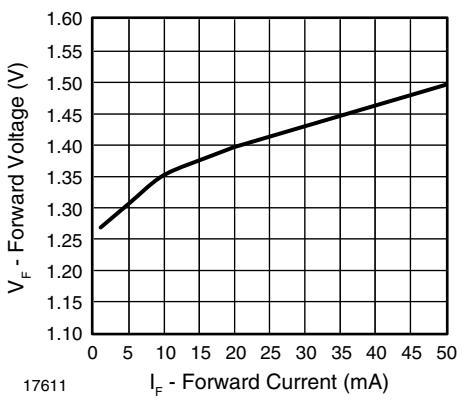

Fig. 7 - Forward Voltage vs. Forward Current

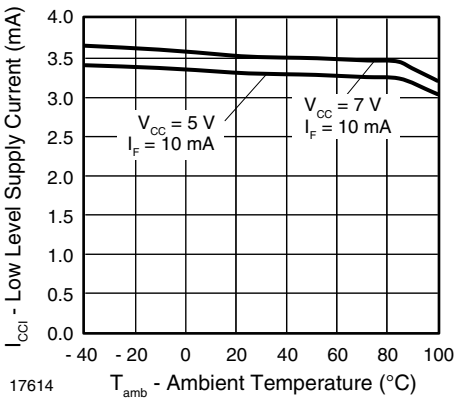

Fig. 9 - Low Level Supply Current vs. Ambient Temperature

For technical questions, contact: optocoupleranswers@vishay.com
THIS DOCUMENT IS SUBJECT TO CHANGE WITHOUT NOTICE. THE PRODUCTS DESCRIBED HEREIN AND THIS DOCUMENT ARE SUBJECT TO SPECIFIC DISCLAIMERS, SET FORTH AT www.vishay.com/doc?91000

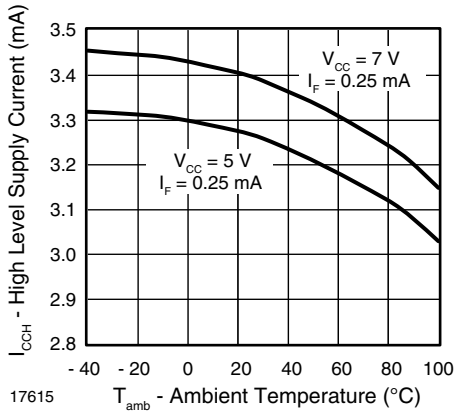

Fig. 10 - High Level Supply Current vs. Ambient Temperature

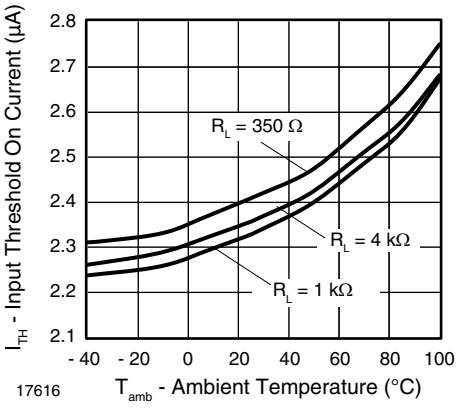

Fig. 11 - Input Threshold On Current vs. Ambient Temperature

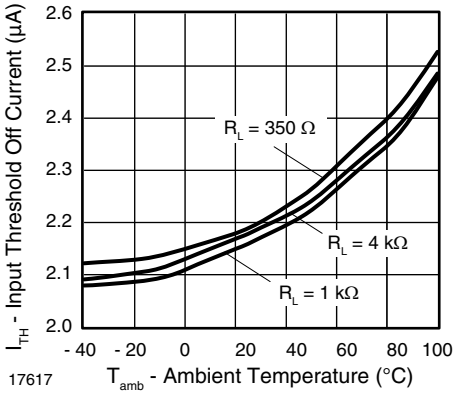

Fig. 12 - Input Threshold Off Current vs. Ambient Temperature

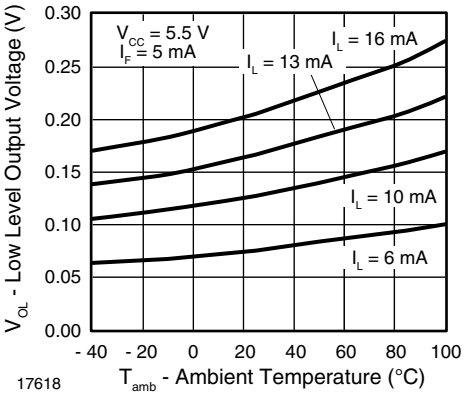

Fig. 13 - Low Level Output Voltage vs. Ambient Temperature

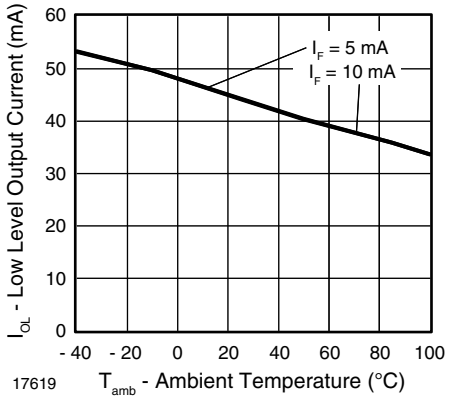

Fig. 14 - Low Level Output Current vs. Ambient Temperature

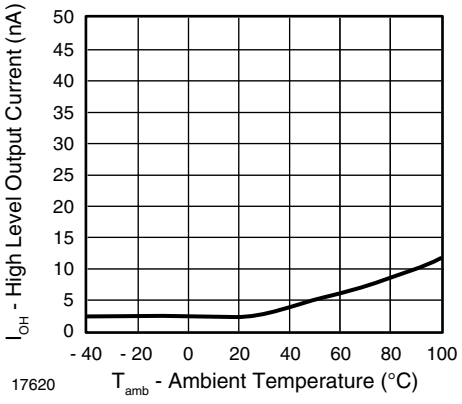

Fig. 15 - High Level Output Current vs. Ambient Temperature

For technical questions, contact: optocoupleranswers@vishay.com
THIS DOCUMENT IS SUBJECT TO CHANGE WITHOUT NOTICE. THE PRODUCTS DESCRIBED HEREIN AND THIS DOCUMENT ARE SUBJECT TO SPECIFIC DISCLAIMERS, SET FORTH AT www.vishay.com/doc?91000

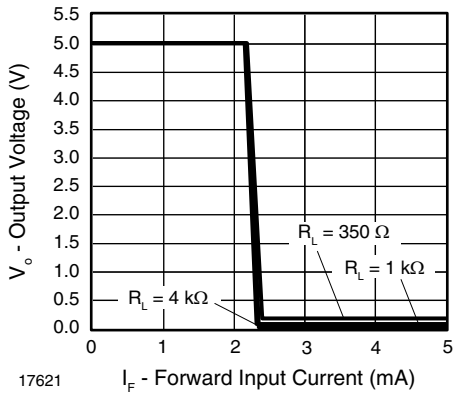

Fig. 16 - Output Voltage vs. Forward Input Current

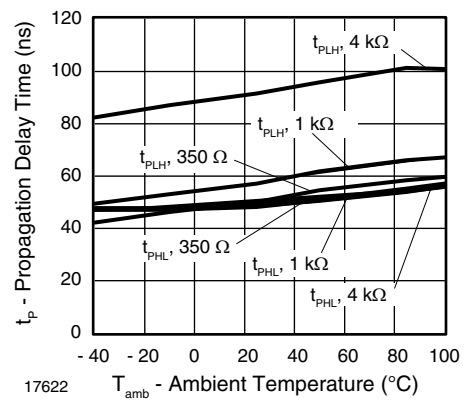

Fig. 17 - Propagation Delay vs. Ambient Temperature

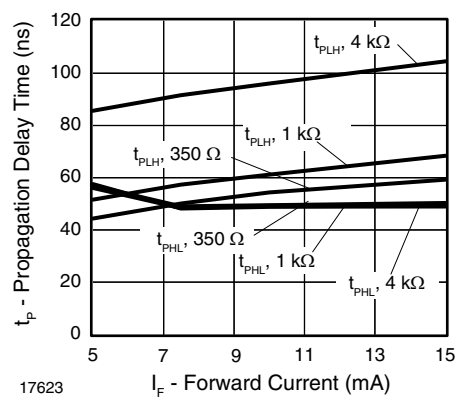

Fig. 18 - Propagation Delay vs. Forward Current

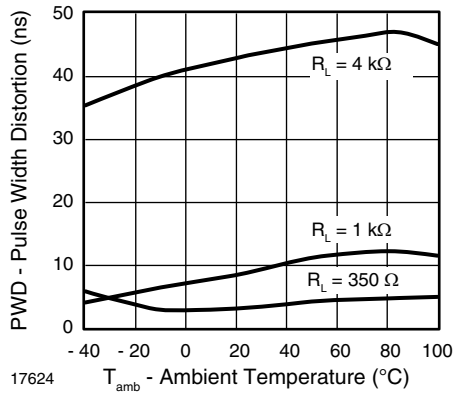

Fig. 19 - Pulse Width Distortion vs. Ambient Temperature

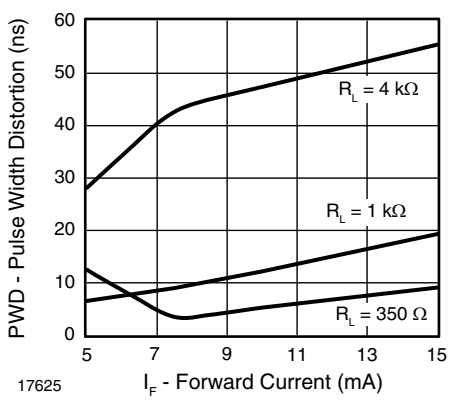

Fig. 20 - Pulse Width Distortion vs. Forward Current

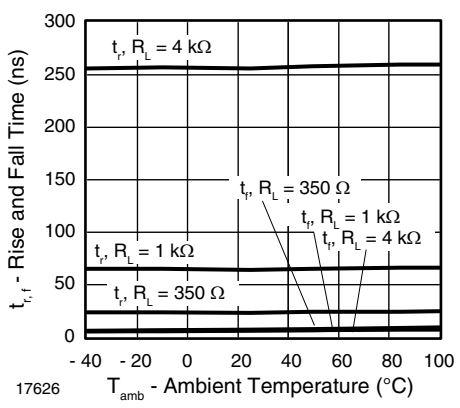

Fig. 21 - Rise and Fall Time vs. Ambient Temperature

For technical questions, contact: optocoupleranswers@vishay.com
THIS DOCUMENT IS SUBJECT TO CHANGE WITHOUT NOTICE. THE PRODUCTS DESCRIBED HEREIN AND THIS DOCUMENT ARE SUBJECT TO SPECIFIC DISCLAIMERS, SET FORTH AT www.vishay.com/doc?91000

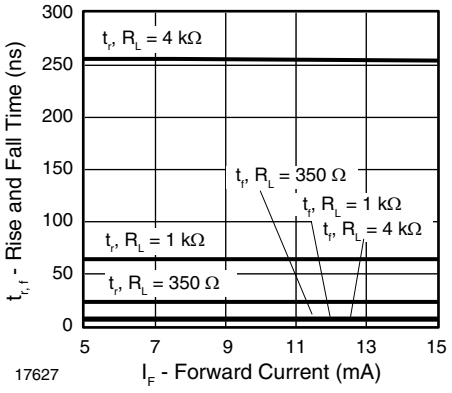

Fig. 22 - Rise and Fall Time vs. Forward Current

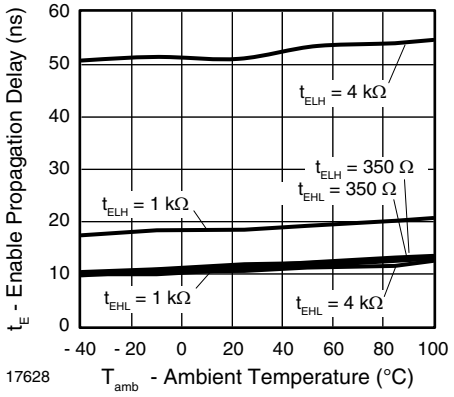

Fig. 23 - Enable Propagation Delay vs. Ambient Temperature

PACKAGE DIMENSIONS in millimeters

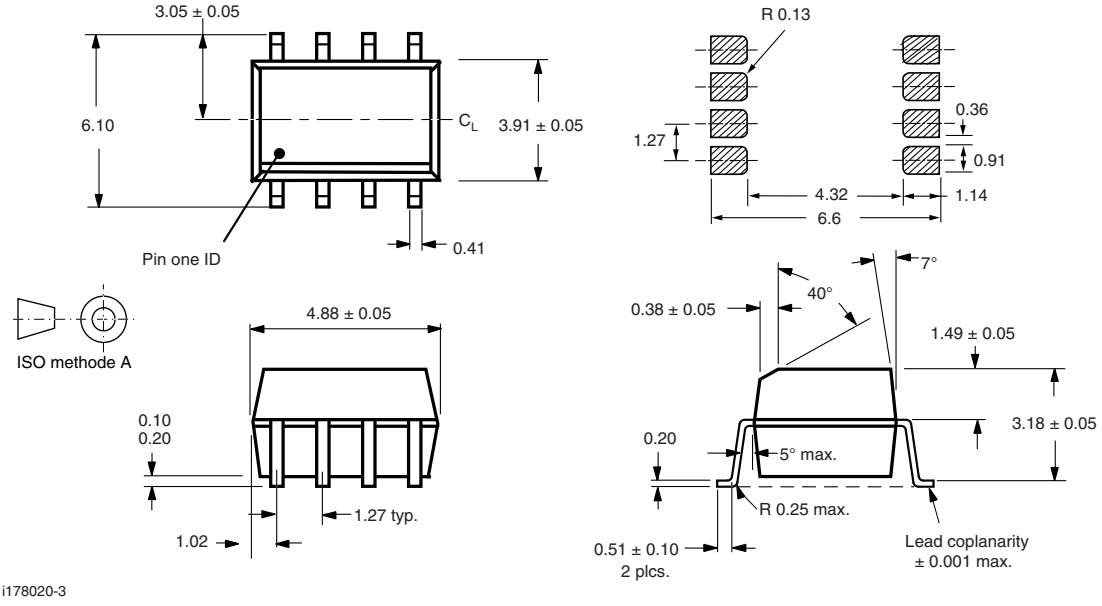

PACKAGE MARKING (example)

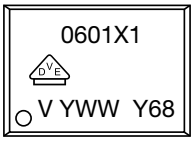

Notes

- The VDE Logo is only marked on option1 parts.
- Tape and reel suffix (T) is not part of the package marking.

ESD CAUTION

This is an ESD (electro static discharge) sensitive device. Electrostatic charges accumulate on the human body and test equipment and can discharge without detection. Therefore, proper ESD precautions are recommended to avoid performance degradation or loss of functionality. ESD withstand voltage of this device is up to 1500 V acc. to JESD22-A114-B.

For technical questions, contact: optocoupleranswers@vishay.com
THIS DOCUMENT IS SUBJECT TO CHANGE WITHOUT NOTICE. THE PRODUCTS DESCRIBED HEREIN AND THIS DOCUMENT ARE SUBJECT TO SPECIFIC DISCLAIMERS, SET FORTH AT www.vishay.com/doc?91000

Disclaimer

ALL PRODUCT, PRODUCT SPECIFICATIONS AND DATA ARE SUBJECT TO CHANGE WITHOUT NOTICE TO IMPROVE RELIABILITY, FUNCTION OR DESIGN OR OTHERWISE.

Vishay Intertechnology, Inc., its affiliates, agents, and employees, and all persons acting on its or their behalf (collectively, “Vishay”), disclaim any and all liability for any errors, inaccuracies or incompleteness contained in any datasheet or in any other disclosure relating to any product.

Vishay makes no warranty, representation or guarantee regarding the suitability of the products for any particular purpose or the continuing production of any product. To the maximum extent permitted by applicable law, Vishay disclaims (i) any and all liability arising out of the application or use of any product, (ii) any and all liability, including without limitation special, consequential or incidental damages, and (iii) any and all implied warranties, including warranties of fitness for particular purpose, non-infringement and merchantability.

Statements regarding the suitability of products for certain types of applications are based on Vishay's knowledge of typical requirements that are often placed on Vishay products in generic applications. Such statements are not binding statements about the suitability of products for a particular application. It is the customer's responsibility to validate that a particular product with the properties described in the product specification is suitable for use in a particular application. Parameters provided in datasheets and / or specifications may vary in different applications and performance may vary over time. All operating parameters, including typical parameters, must be validated for each customer application by the customer's technical experts. Product specifications do not expand or otherwise modify Vishay's terms and conditions of purchase, including but not limited to the warranty expressed therein.

Hyperlinks included in this datasheet may direct users to third-party websites. These links are provided as a convenience and for informational purposes only. Inclusion of these hyperlinks does not constitute an endorsement or an approval by Vishay of any of the products, services or opinions of the corporation, organization or individual associated with the third-party website. Vishay disclaims any and all liability and bears no responsibility for the accuracy, legality or content of the third-party website or for that of subsequent links.

Except as expressly indicated in writing, Vishay products are not designed for use in medical, life-saving, or life-sustaining applications or for any other application in which the failure of the Vishay product could result in personal injury or death. Customers using or selling Vishay products not expressly indicated for use in such applications do so at their own risk. Please contact authorized Vishay personnel to obtain written terms and conditions regarding products designed for such applications.

No license, express or implied, by estoppel or otherwise, to any intellectual property rights is granted by this document or by any conduct of Vishay. Product names and markings noted herein may be trademarks of their respective owners.

© 2023 VISHAY INTERTECHNOLOGY, INC. ALL RIGHTS RESERVED