Silicon PIN Photodiode

FEATURES

- Package type: surface-mount
- Package form: top view
- Dimensions (L x W x H in mm): 4.8 x 2.5 x 0.48
- Radiant sensitive area (in mm^2): 4.5
- 0.48 mm low profile package
- Enhanced sensitivity for visible light
- Suitable for visible and near infrared radiation
- Fast response times
- Angle of half sensitivity: $\varphi = \pm 65°$
- Floor life: 168 h, MSL 3, according to J-STD-020
- Material categorization: for definitions of compliance please see www.vishay.com/doc?99912

Pb-free
e4
RoHS COMPLIANT
HALOGEN FREE
GREEN (5-2008)

DESCRIPTION

VEMD8080 is a high speed and high sensitive PIN photodiode with enhanced sensitivity for visible light. It is a low profile surface-mount device (SMD) including the chip with a 4.5 mm^2 sensitive area detecting visible and near infrared radiation.

APPLICATIONS

- High speed photo detector
- Wearables

PRODUCT SUMMARY

COMPONENT	I_{ra} (µA)	φ (deg)	$\lambda_{0.1}$ (nm)
VEMD8080	28	± 65	350 to 1100

Note

- Test conditions see table “Basic Characteristics”

ORDERING INFORMATION

ORDERING CODE	PACKAGING	REMARKS	PACKAGE FORM
VEMD8080	Tape and reel	MOQ: 5000 pcs, 5000 pcs/reel	Top view

Note

- MOQ: minimum order quantity

ABSOLUTE MAXIMUM RATINGS (T_{amb} = 25 °C, unless otherwise specified)

PARAMETER	TEST CONDITION	SYMBOL	VALUE	UNIT
Reverse voltage		V_R	20	V
Junction temperature		T_j	85	°C
Operating temperature range		T_{amb}	-40 to +85	°C
Storage temperature range		T_{stg}	-40 to +85	°C
Soldering temperature	According to reflow solder profile Fig. 8	T_{sd}	260	°C
Thermal resistance junction-to-ambient		R_{thJA}	350	K/W
ESD safety HBM	± 2000 V, 1.5 kΩ, 100 pF, 3 pulses	ESD_{HBM}	≥ 2	kV

For technical questions, contact: detectortechsupport@vishay.com
THIS DOCUMENT IS SUBJECT TO CHANGE WITHOUT NOTICE. THE PRODUCTS DESCRIBED HEREIN AND THIS DOCUMENT ARE SUBJECT TO SPECIFIC DISCLAIMERS, SET FORTH AT www.vishay.com/doc?91000

BASIC CHARACTERISTICS (T_{amb} = 25 °C, unless otherwise specified)						
PARAMETER	**TEST CONDITION**	**SYMBOL**	**MIN.**	**TYP.**	**MAX.**	**UNIT**
Forward voltage	I_F = 50 mA	V_F	-	1.2	1.6	V
Breakdown voltage	I_R = 100 µA, E = 0	$V_{(BR)}$	20	-	-	V
Reverse dark current	V_R = 10 V, E = 0	I_{ro}	-	0.2	10	nA
Diode capacitance	V_R = 0 V, f = 1 MHz, E = 0	C_D	-	47	-	pF
	V_R = 3 V, f = 1 MHz, E = 0	C_D	-	17	40	pF
Open circuit voltage	E_e = 1 mW/cm², λ = 950 nm	V_o	-	320	-	mV
Temperature coefficient of V_o	E_e = 1 mW/cm², λ = 950 nm	TK_{Vo}	-	-3.0	-	mV/K
Short circuit current	E_e = 1 mW/cm², λ = 950 nm	I_k	-	32	-	µA
Temperature coefficient of I_k	E_e = 1 mW/cm², λ = 950 nm	TK_{Ik}	-	0.1	-	%/K
Reverse light current	E_e = 1 mW/cm², λ = 850 nm, V_R = 5 V	I_{ra}	23	28	33	µA
	E_e = 0.25 mW/cm², λ = 525 nm, V_R = 5 V	I_{ra}	3.4	4.4	5.3	µA
Angle of half sensitivity		φ	-	± 65	-	deg
Wavelength of peak sensitivity		λ_p	-	850	-	nm
Range of spectral bandwidth		$\lambda_{0.1}$	-	350 to 1100	-	nm
Rise time	V_R = 10 V, R_L = 1 kΩ, λ = 830 nm	t_r	-	70	-	ns
Fall time	V_R = 10 V, R_L = 1 kΩ, λ = 830 nm	t_f	-	70	-	ns

BASIC CHARACTERISTICS (T_{amb} = 25 °C, unless otherwise specified)

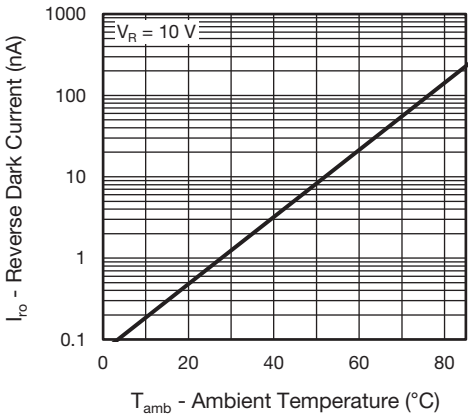

Fig. 1 - Reverse Dark Current vs. Ambient Temperature

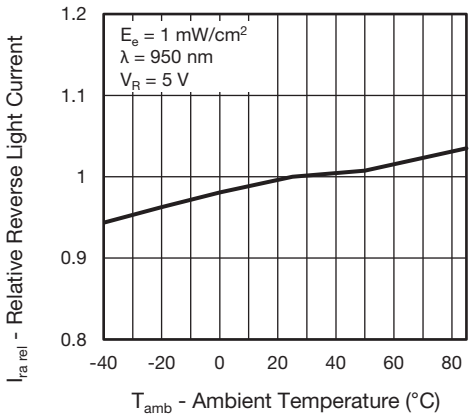

Fig. 2 - Relative Reverse Light Current vs. Ambient Temperature

For technical questions, contact: detectortechsupport@vishay.com
THIS DOCUMENT IS SUBJECT TO CHANGE WITHOUT NOTICE. THE PRODUCTS DESCRIBED HEREIN AND THIS DOCUMENT ARE SUBJECT TO SPECIFIC DISCLAIMERS, SET FORTH AT www.vishay.com/doc?91000

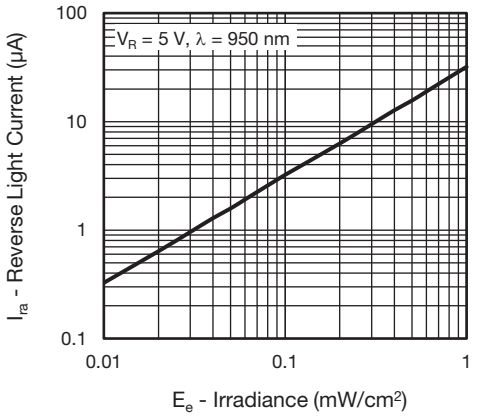

Fig. 3 - Reverse Light Current vs. Irradiance

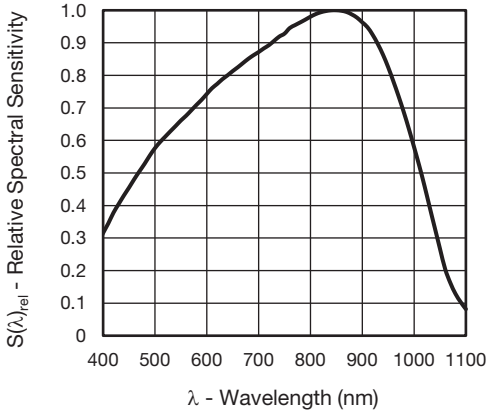

Fig. 5 - Relative Spectral Sensitivity vs. Wavelength

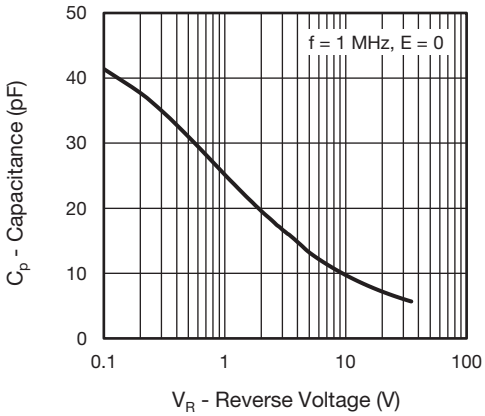

Fig. 4 - Diode Capacitance vs. Reverse Voltage

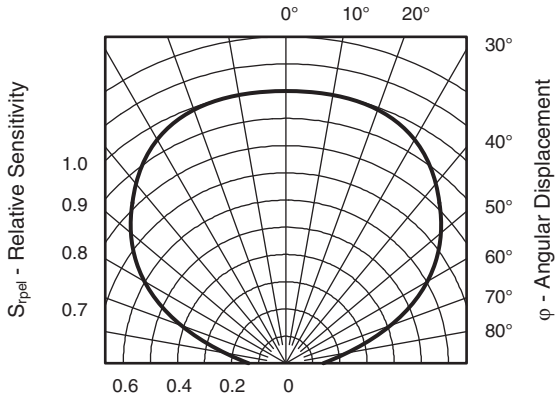

Fig. 6 - Relative Sensitivity vs. Angular Displacement

For technical questions, contact: detectortechsupport@vishay.com
THIS DOCUMENT IS SUBJECT TO CHANGE WITHOUT NOTICE. THE PRODUCTS DESCRIBED HEREIN AND THIS DOCUMENT ARE SUBJECT TO SPECIFIC DISCLAIMERS, SET FORTH AT www.vishay.com/doc?91000

PACKAGE DIMENSIONS in millimeters

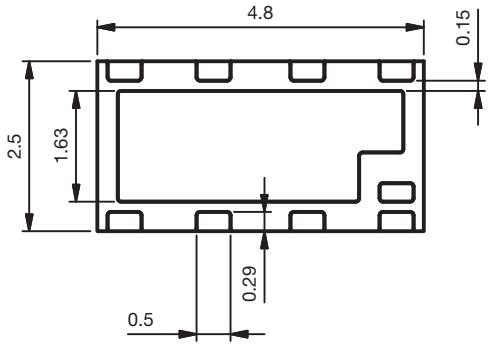

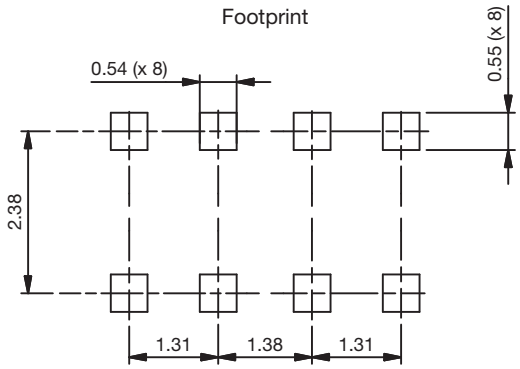

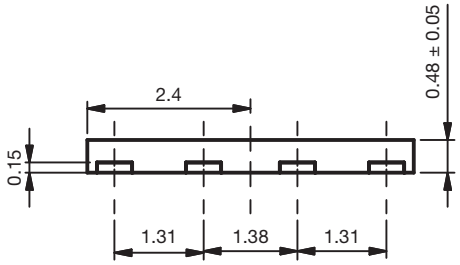

Not indicated tolerances ± 0.1 mm

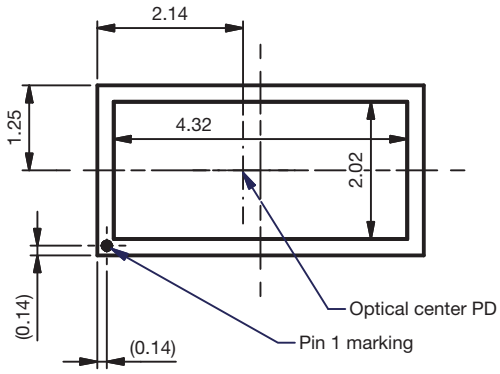

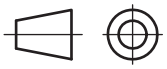

Technical drawings according to DIN specification.

Pinning top view

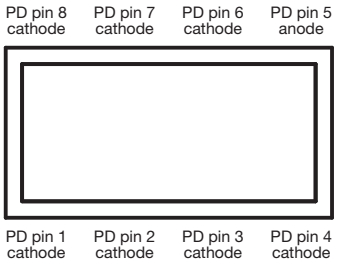

Pinning bottom view

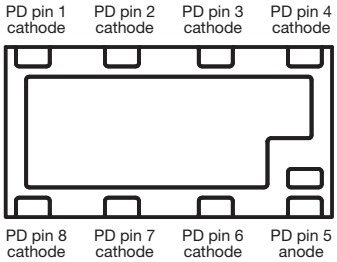

Drawing number: 6.550-5354.01-4
Issue: 1; 20.04.2018

For technical questions, contact: detectortechsupport@vishay.com
THIS DOCUMENT IS SUBJECT TO CHANGE WITHOUT NOTICE. THE PRODUCTS DESCRIBED HEREIN AND THIS DOCUMENT ARE SUBJECT TO SPECIFIC DISCLAIMERS, SET FORTH AT www.vishay.com/doc?91000

TAPE AND REEL DIMENSIONS in millimeters

Non tolerated dimensions ± 0.1 mm
Reel design is representative for different types

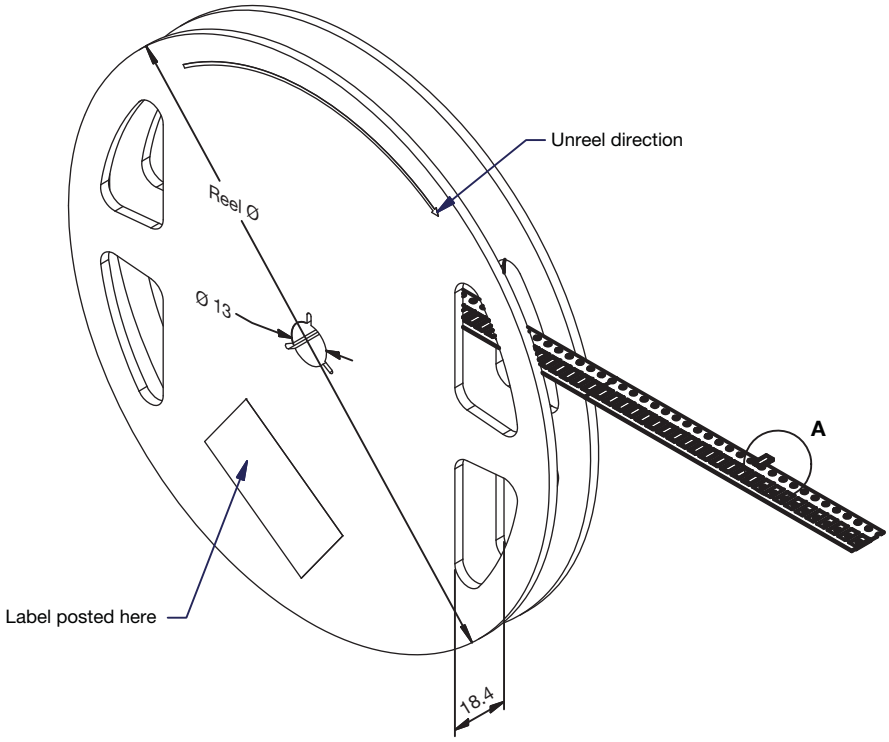

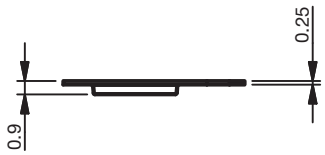

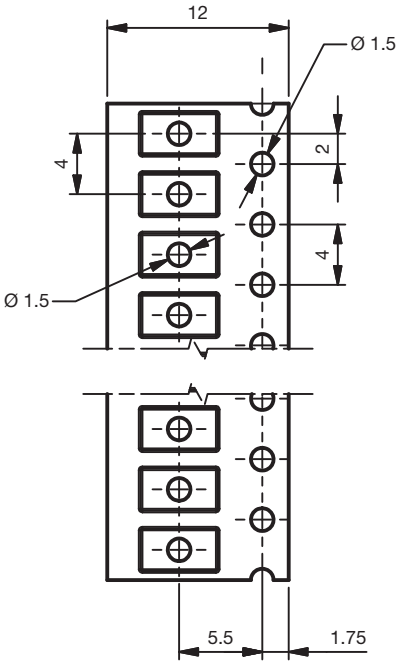

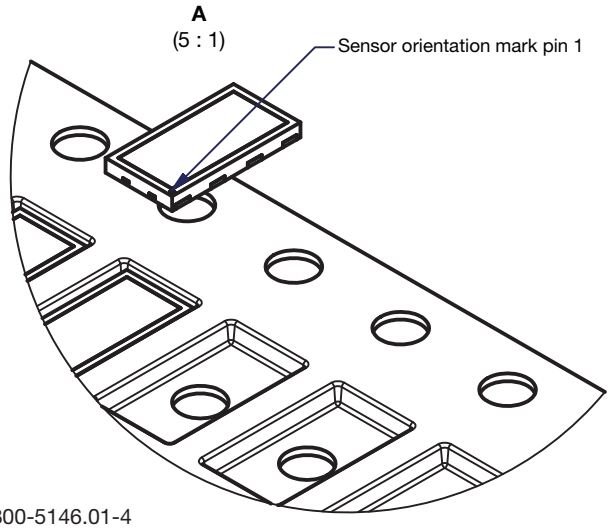

Drawing-No.: 9.800-5146.01-4
Issue: 1; 20.04.2018

For technical questions, contact: detectortechsupport@vishay.com
THIS DOCUMENT IS SUBJECT TO CHANGE WITHOUT NOTICE. THE PRODUCTS DESCRIBED HEREIN AND THIS DOCUMENT ARE SUBJECT TO SPECIFIC DISCLAIMERS, SET FORTH AT www.vishay.com/doc?91000

SOLDER PROFILE

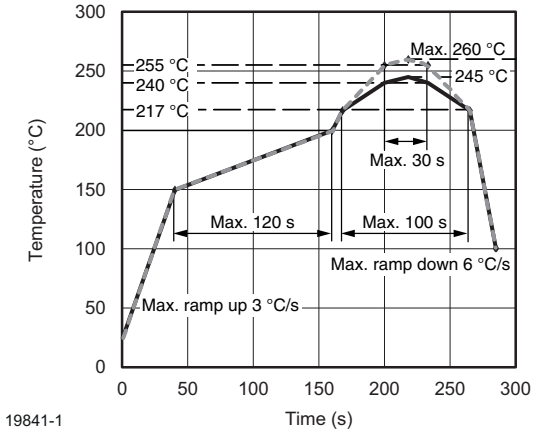

Fig. 7 - Lead (Pb)-free Reflow Solder Profile According to J-STD-020D

DRYPACK

Devices are packed in moisture barrier bags (MBB) to prevent the products from moisture absorption during transportation and storage. Each bag contains a desiccant.

FLOOR LIFE

Time between soldering and removing from MBB must not exceed the time indicated in J-STD-020:

Moisture sensitivity: level 3

Floor life: 168 h

Conditions: T_{amb} < 30 °C, RH < 60 %

DRYING

In case of moisture absorption devices should be baked before soldering. Conditions see J-STD-020 or recommended conditions:

192 h at 40 °C (+ 5 °C), RH < 5 %
or
96 h at 60 °C (+ 5 °C), RH < 5 %

For technical questions, contact: detectortechsupport@vishay.com
THIS DOCUMENT IS SUBJECT TO CHANGE WITHOUT NOTICE. THE PRODUCTS DESCRIBED HEREIN AND THIS DOCUMENT ARE SUBJECT TO SPECIFIC DISCLAIMERS, SET FORTH AT www.vishay.com/doc?91000

Disclaimer

ALL PRODUCT, PRODUCT SPECIFICATIONS AND DATA ARE SUBJECT TO CHANGE WITHOUT NOTICE TO IMPROVE RELIABILITY, FUNCTION OR DESIGN OR OTHERWISE.

Vishay Intertechnology, Inc., its affiliates, agents, and employees, and all persons acting on its or their behalf (collectively, “Vishay”), disclaim any and all liability for any errors, inaccuracies or incompleteness contained in any datasheet or in any other disclosure relating to any product.

Vishay makes no warranty, representation or guarantee regarding the suitability of the products for any particular purpose or the continuing production of any product. To the maximum extent permitted by applicable law, Vishay disclaims (i) any and all liability arising out of the application or use of any product, (ii) any and all liability, including without limitation special, consequential or incidental damages, and (iii) any and all implied warranties, including warranties of fitness for particular purpose, non-infringement and merchantability.

Statements regarding the suitability of products for certain types of applications are based on Vishay's knowledge of typical requirements that are often placed on Vishay products in generic applications. Such statements are not binding statements about the suitability of products for a particular application. It is the customer's responsibility to validate that a particular product with the properties described in the product specification is suitable for use in a particular application. Parameters provided in datasheets and / or specifications may vary in different applications and performance may vary over time. All operating parameters, including typical parameters, must be validated for each customer application by the customer's technical experts. Product specifications do not expand or otherwise modify Vishay's terms and conditions of purchase, including but not limited to the warranty expressed therein.

Hyperlinks included in this datasheet may direct users to third-party websites. These links are provided as a convenience and for informational purposes only. Inclusion of these hyperlinks does not constitute an endorsement or an approval by Vishay of any of the products, services or opinions of the corporation, organization or individual associated with the third-party website. Vishay disclaims any and all liability and bears no responsibility for the accuracy, legality or content of the third-party website or for that of subsequent links.

Except as expressly indicated in writing, Vishay products are not designed for use in medical, life-saving, or life-sustaining applications or for any other application in which the failure of the Vishay product could result in personal injury or death. Customers using or selling Vishay products not expressly indicated for use in such applications do so at their own risk. Please contact authorized Vishay personnel to obtain written terms and conditions regarding products designed for such applications.

No license, express or implied, by estoppel or otherwise, to any intellectual property rights is granted by this document or by any conduct of Vishay. Product names and markings noted herein may be trademarks of their respective owners.

© 2023 VISHAY INTERTECHNOLOGY, INC. ALL RIGHTS RESERVED