Silicon PIN Photodiode

FEATURES

- Package type: surface mount
- Package form: 0805
- Dimensions (L x W x H in mm): 2 x 1.25 x 0.85
- Radiant sensitive area (in mm^2): 0.23
- Enhanced operating temperature range: T_{OP} = -40 °C to +110 °C
- High radiant sensitivity
- Suitable for visible and near infrared radiation
- Fast response times
- Angle of half sensitivity: φ = ± 60°
- Floor life: 72 h, MSL 4, according to J-STD-020
- Lead (Pb)-free reflow soldering
- AEC-Q101 qualified
- Material categorization: for definitions of compliance please see www.vishay.com/doc?99912

AUTOMOTIVE GRADE
Pb-free
e4
RoHS COMPLIANT
HALOGEN FREE
GREEN (5-2008)

DESCRIPTION

TEMD7000ITX01 is a high speed and high sensitive PIN photodiode. It is a miniature surface mount device (SMD) including the chip with a 0.23 mm^2 sensitive area detecting visible and near infrared radiation.

APPLICATIONS

- High speed photo detector

PRODUCT SUMMARY			
COMPONENT	I_{ra} (μA)	φ (deg)	$\lambda_{0.1}$ (nm)
TEMD7000ITX01	3	± 60	350 to 1120

Note
- Test conditions see table "Basic Characteristics"

ORDERING INFORMATION			
ORDERING CODE	PACKAGING	REMARKS	PACKAGE FORM
TEMD7000ITX01	Tape and reel	MOQ: 3000 pcs, 3000 pcs/reel	0805

Note
- MOQ: minimum order quantity

ABSOLUTE MAXIMUM RATINGS (T_{amb} = 25 °C, unless otherwise specified)				
PARAMETER	TEST CONDITION	SYMBOL	VALUE	UNIT
Reverse voltage		V_R	60	V
Power dissipation	$T_{amb} \leq 25$ °C	P_V	215	mW
Junction temperature		T_j	110	°C
Operating temperature range		T_{amb}	-40 to +110	°C
Storage temperature range		T_{stg}	-40 to +110	°C
Soldering temperature	Acc. reflow solder profile fig. 8	T_{sd}	260	°C
Thermal resistance junction / ambient	Acc. J-STD-051	R_{thJA}	270	K/W

For technical questions, contact: detectortechsupport@vishay.com
THIS DOCUMENT IS SUBJECT TO CHANGE WITHOUT NOTICE. THE PRODUCTS DESCRIBED HEREIN AND THIS DOCUMENT ARE SUBJECT TO SPECIFIC DISCLAIMERS, SET FORTH AT www.vishay.com/doc?91000

BASIC CHARACTERISTICS (T_{amb} = 25 °C, unless otherwise specified)						
PARAMETER	**TEST CONDITION**	**SYMBOL**	**MIN.**	**TYP.**	**MAX.**	**UNIT**
Forward voltage	I_F = 50 mA	V_F		1		V
Breakdown voltage	I_R = 100 µA, E = 0	$V_{(BR)}$	60			V
Reverse dark current	V_R = 10 V, E = 0	I_{ro}		1	3	nA
Diode capacitance	V_R = 0 V, f = 1 MHz, E = 0	C_D		4		pF
	V_R = 5 V, f = 1 MHz, E = 0	C_D		1.3		pF
Open circuit voltage	E_e = 1 mW/cm², λ = 950 nm	V_o		350		mV
Temperature coefficient of V_o	E_e = 1 mW/cm², λ = 950 nm	TK_{Vo}		-2.6		mV/K
Short circuit current	E_e = 1 mW/cm², λ = 950 nm	I_k		3		µA
Temperature coefficient of I_k	E_e = 1 mW/cm², λ = 950 nm	TK_{Ik}		0.1		%/K
Reverse light current	E_e = 1 mW/cm², λ = 950 nm, V_R = 5 V	I_{ra}	2.4	3	3.6	µA
Angle of half sensitivity		φ		± 60		deg
Wavelength of peak sensitivity		λ_p		900		nm
Range of spectral bandwidth		$\lambda_{0.1}$		350 to 1120		nm
Rise time	V_R = 10 V, R_L = 1 kΩ, λ = 820 nm	t_r		100		ns
Fall time	V_R = 10 V, R_L = 1 kΩ, λ = 820 nm	t_f		100		ns

BASIC CHARACTERISTICS (T_{amb} = 25 °C, unless otherwise specified)

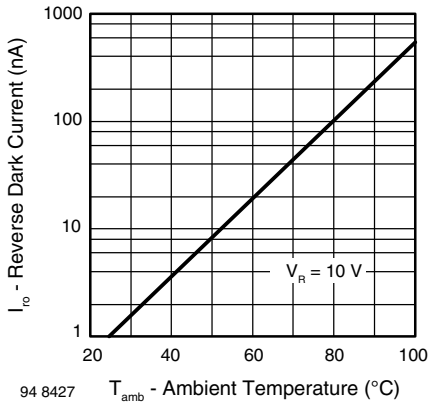

Fig. 1 - Reverse Dark Current vs. Ambient Temperature

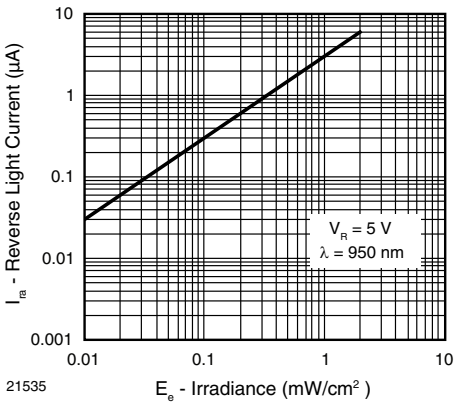

Fig. 3 - Reverse Light Current vs. Irradiance

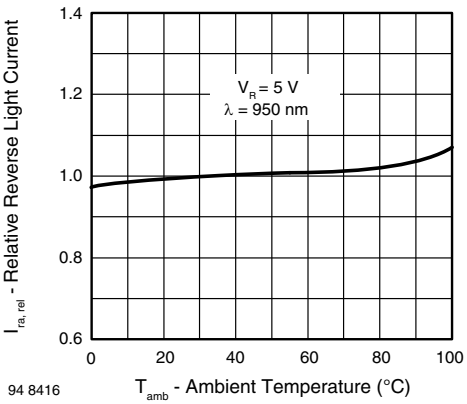

Fig. 2 - Relative Reverse Light Current vs. Ambient Temperature

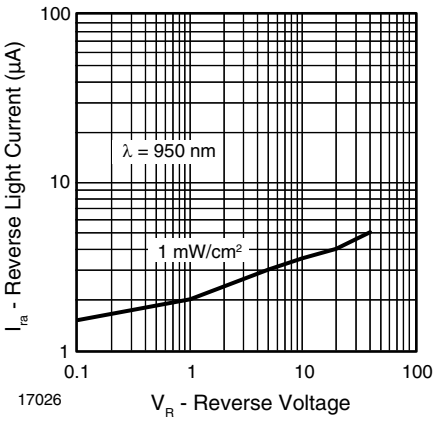

Fig. 4 - Reverse Light Current vs. Reverse Voltage

For technical questions, contact: detectortechsupport@vishay.com
THIS DOCUMENT IS SUBJECT TO CHANGE WITHOUT NOTICE. THE PRODUCTS DESCRIBED HEREIN AND THIS DOCUMENT ARE SUBJECT TO SPECIFIC DISCLAIMERS, SET FORTH AT www.vishay.com/doc?91000

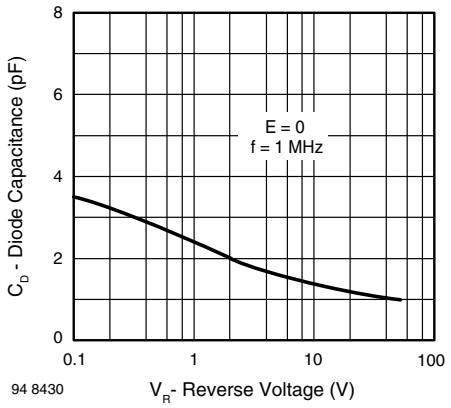

Fig. 5 - Diode Capacitance vs. Reverse Voltage

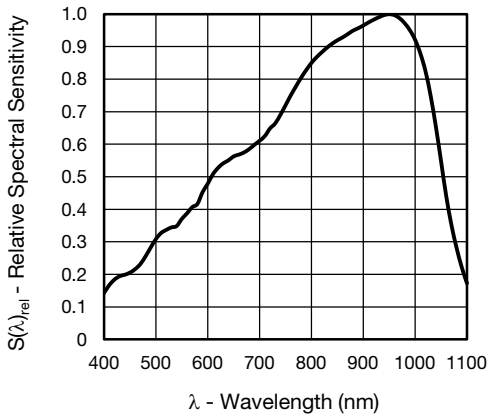

Fig. 6 - Relative Spectral Sensitivity vs. Wavelength

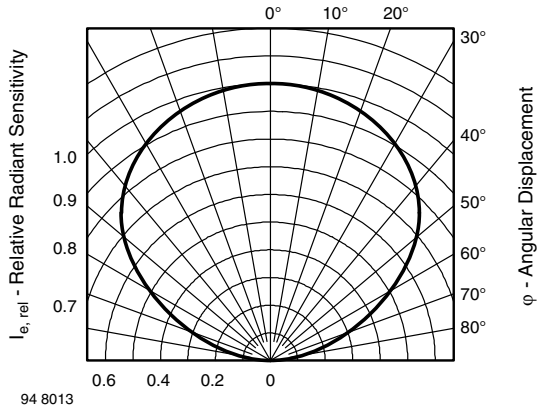

Fig. 7 - Relative Radiant Sensitivity vs. Angular Displacement

REFLOW SOLDER PROFILE

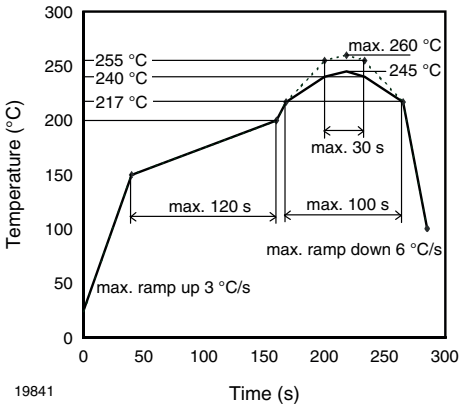

Fig. 8 - Lead (Pb)-free Reflow Solder Profile acc. J-STD-020

DRYPACK

Devices are packed in moisture barrier bags (MBB) to prevent the products from moisture absorption during transportation and storage. Each bag contains a desiccant.

FLOOR LIFE

Floor life (time between soldering and removing from MBB) must not exceed the time indicated on MBB label:

Floor life: 72 h

Conditions: T_{amb} < 30 °C, RH < 60 %

Moisture sensitivity level 4, according to J-STD-020.

DRYING

In case of moisture absorption devices should be baked before soldering. Conditions see J-STD-020 or label. Devices taped on reel dry using recommended conditions 192 h at 40 °C (+ 5 °C), RH < 5 %.

For technical questions, contact: detectortechsupport@vishay.com
THIS DOCUMENT IS SUBJECT TO CHANGE WITHOUT NOTICE. THE PRODUCTS DESCRIBED HEREIN AND THIS DOCUMENT ARE SUBJECT TO SPECIFIC DISCLAIMERS, SET FORTH AT www.vishay.com/doc?91000

PACKAGE DIMENSIONS in millimeters

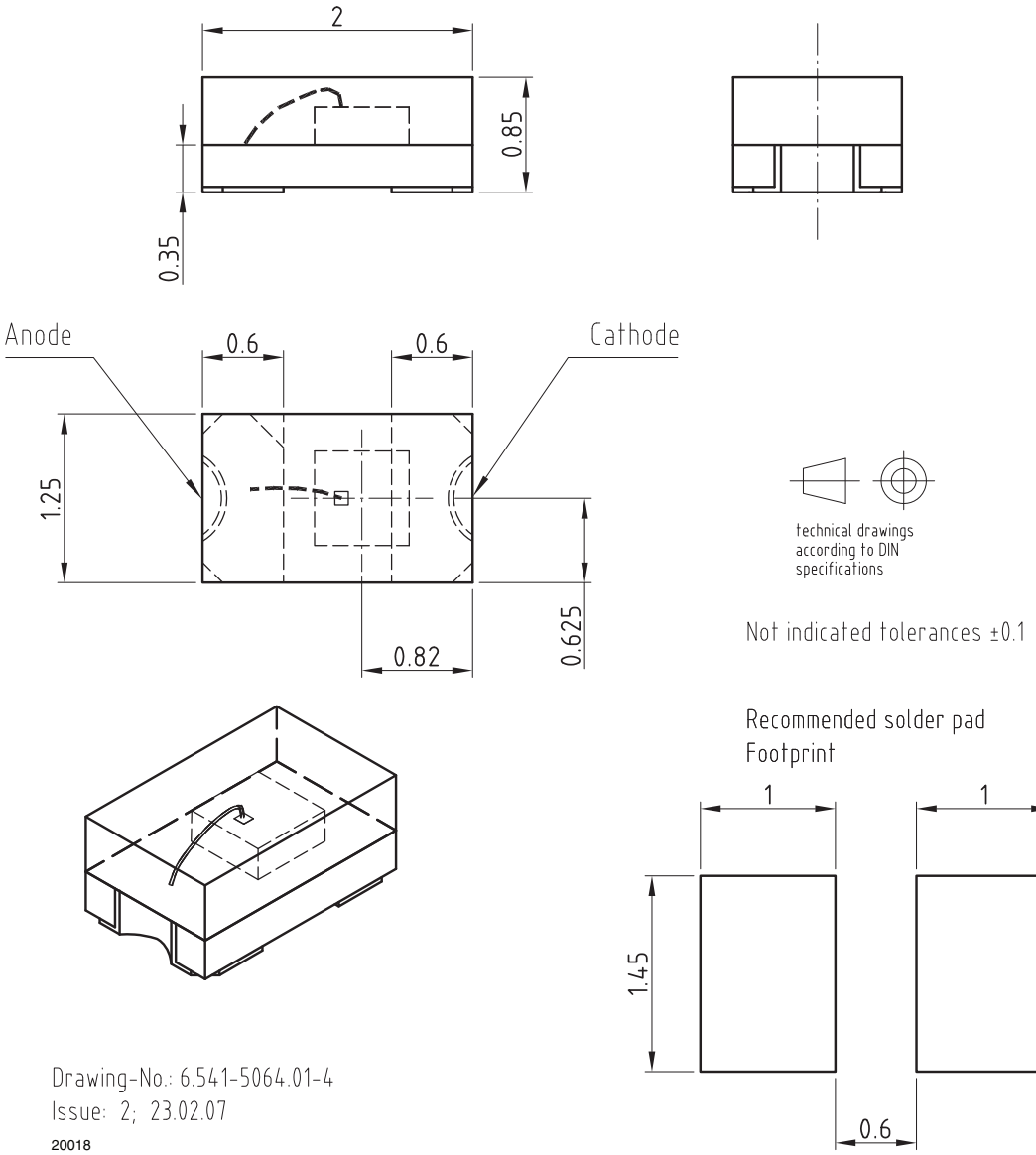

For technical questions, contact: detectortechsupport@vishay.com
THIS DOCUMENT IS SUBJECT TO CHANGE WITHOUT NOTICE. THE PRODUCTS DESCRIBED HEREIN AND THIS DOCUMENT ARE SUBJECT TO SPECIFIC DISCLAIMERS, SET FORTH AT www.vishay.com/doc?91000

BLISTER TAPE DIMENSIONS in millimeters

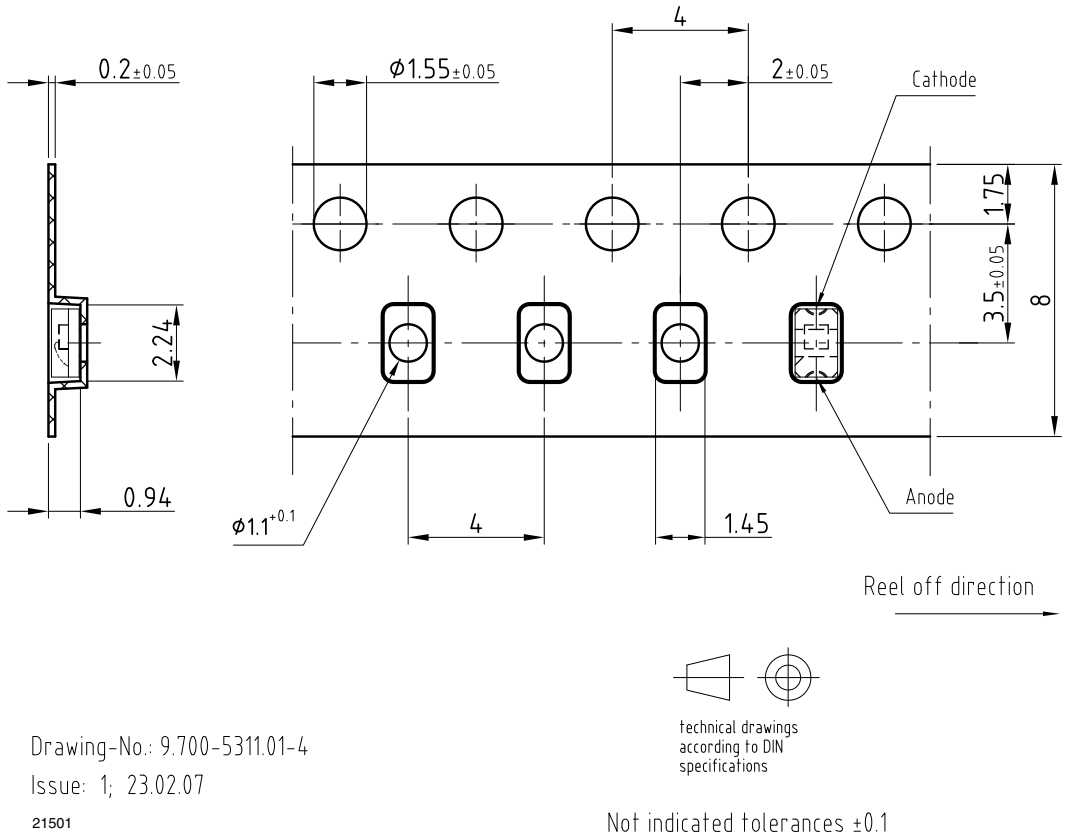

For technical questions, contact: detectortechsupport@vishay.com
THIS DOCUMENT IS SUBJECT TO CHANGE WITHOUT NOTICE. THE PRODUCTS DESCRIBED HEREIN AND THIS DOCUMENT ARE SUBJECT TO SPECIFIC DISCLAIMERS, SET FORTH AT www.vishay.com/doc?91000

REEL DIMENSIONS in millimeters

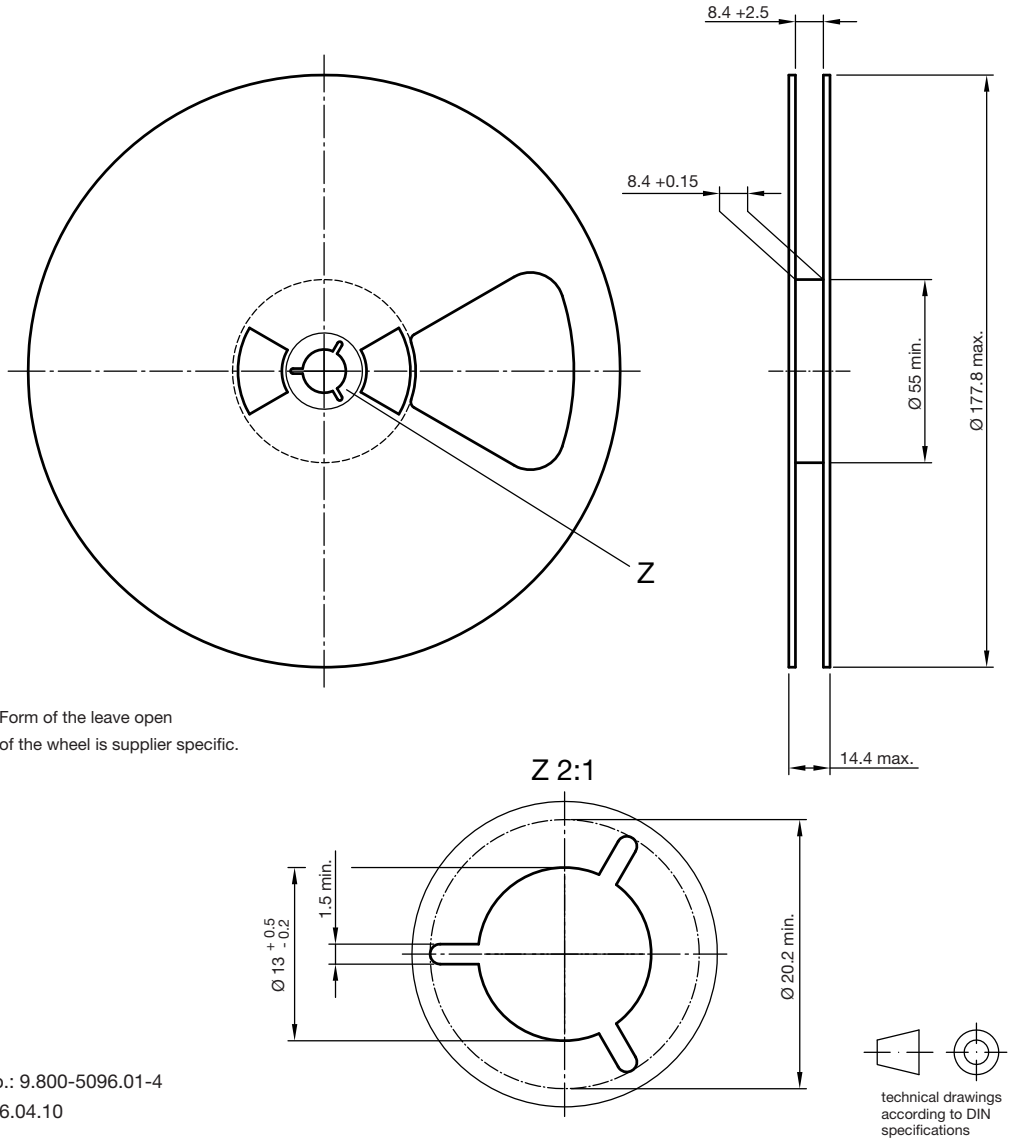

Form of the leave open
of the wheel is supplier specific.

Drawing-No.: 9.800-5096.01-4
Issue: 2; 26.04.10
20875

technical drawings
according to DIN
specifications

For technical questions, contact: detectortechsupport@vishay.com
THIS DOCUMENT IS SUBJECT TO CHANGE WITHOUT NOTICE. THE PRODUCTS DESCRIBED HEREIN AND THIS DOCUMENT ARE SUBJECT TO SPECIFIC DISCLAIMERS, SET FORTH AT www.vishay.com/doc?91000

Disclaimer

ALL PRODUCT, PRODUCT SPECIFICATIONS AND DATA ARE SUBJECT TO CHANGE WITHOUT NOTICE TO IMPROVE RELIABILITY, FUNCTION OR DESIGN OR OTHERWISE.

Vishay Intertechnology, Inc., its affiliates, agents, and employees, and all persons acting on its or their behalf (collectively, “Vishay”), disclaim any and all liability for any errors, inaccuracies or incompleteness contained in any datasheet or in any other disclosure relating to any product.

Vishay makes no warranty, representation or guarantee regarding the suitability of the products for any particular purpose or the continuing production of any product. To the maximum extent permitted by applicable law, Vishay disclaims (i) any and all liability arising out of the application or use of any product, (ii) any and all liability, including without limitation special, consequential or incidental damages, and (iii) any and all implied warranties, including warranties of fitness for particular purpose, non-infringement and merchantability.

Statements regarding the suitability of products for certain types of applications are based on Vishay's knowledge of typical requirements that are often placed on Vishay products in generic applications. Such statements are not binding statements about the suitability of products for a particular application. It is the customer's responsibility to validate that a particular product with the properties described in the product specification is suitable for use in a particular application. Parameters provided in datasheets and / or specifications may vary in different applications and performance may vary over time. All operating parameters, including typical parameters, must be validated for each customer application by the customer's technical experts. Product specifications do not expand or otherwise modify Vishay's terms and conditions of purchase, including but not limited to the warranty expressed therein.

Hyperlinks included in this datasheet may direct users to third-party websites. These links are provided as a convenience and for informational purposes only. Inclusion of these hyperlinks does not constitute an endorsement or an approval by Vishay of any of the products, services or opinions of the corporation, organization or individual associated with the third-party website. Vishay disclaims any and all liability and bears no responsibility for the accuracy, legality or content of the third-party website or for that of subsequent links.

Except as expressly indicated in writing, Vishay products are not designed for use in medical, life-saving, or life-sustaining applications or for any other application in which the failure of the Vishay product could result in personal injury or death. Customers using or selling Vishay products not expressly indicated for use in such applications do so at their own risk. Please contact authorized Vishay personnel to obtain written terms and conditions regarding products designed for such applications.

No license, express or implied, by estoppel or otherwise, to any intellectual property rights is granted by this document or by any conduct of Vishay. Product names and markings noted herein may be trademarks of their respective owners.

© 2023 VISHAY INTERTECHNOLOGY, INC. ALL RIGHTS RESERVED