Reflective Optical Sensor With Transistor Output

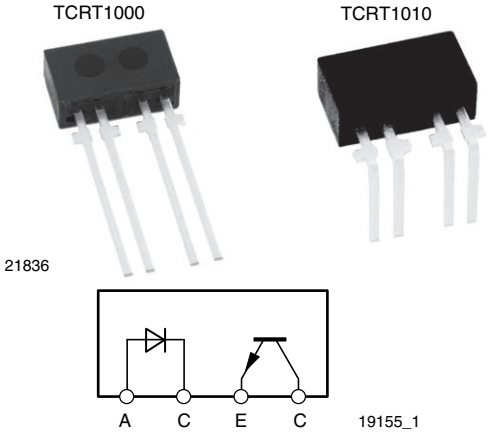

FEATURES

- Package type: leaded
- Detector type: phototransistor
- Dimensions (L x W x H in mm): 7 x 4 x 2.5
- Peak operating distance: 1 mm
- Operating range within > 20 % relative collector current: 0.2 mm to 4 mm
- Typical output current under test: I_C = 0.7 mA
- Daylight blocking filter
- Emitter wavelength: 950 nm
- Lead (Pb)-free soldering released
- Material categorization: for definitions of compliance please see www.vishay.com/doc?99912

Pb-free
e4
RoHS COMPLIANT

DESCRIPTION

The TCRT1000 and TCRT1010 are reflective sensors which include an infrared emitter and phototransistor in a leaded package which blocks visible light.

APPLICATIONS

- Optoelectronic scanning and switching devices i.e., index sensing, coded disk scanning etc. (optoelectronic encoder assemblies for transmissive sensing).

PRODUCT SUMMARY

PART NUMBER	DISTANCE FOR MAXIMUM CTR_{REL} [1] (mm)	DISTANCE RANGE FOR RELATIVE I_{out} > 20 % (mm)	TYPICAL OUTPUT CURRENT UNDER TEST [2] (mA)	DAYLIGHT BLOCKING FILTER INTEGRATED
TCRT1000	1	0.2 to 4	0.7	Yes
TCRT1010	1	0.2 to 4	0.7	Yes

Notes
(1) CTR: current transfere ratio, I_{out}/I_{in}
(2) Conditions like in table basic charactristics/sensor

ORDERING INFORMATION

ORDERING CODE	PACKAGING	VOLUME [1]	REMARKS
TCRT1000	Bulk	MOQ: 1000 pcs, 1000 pcs/bulk	Straight leads
TCRT1010	Bulk	MOQ: 1000 pcs, 1000 pcs/bulk	Bent leads

Note
(1) MOQ: minimum order quantity

ABSOLUTE MAXIMUM RATINGS (T_{amb} = 25 °C, unless otherwise specified)

PARAMETER	TEST CONDITION	SYMBOL	VALUE	UNIT
SENSOR				
Total power dissipation	$T_{amb} \leq 25$ °C	P_{tot}	270	mW
Ambient temperature range		T_{amb}	-40 to +85	°C
Storage temperature range		T_{stg}	-40 to +100	°C
Soldering temperature	2 mm distance to package, t ≤ 5 s	T_{sd}	260	°C
INPUT (EMITTER)				
Reverse voltage		V_R	5	V
Forward current		I_F	100	mA
Forward surge current	$t_p \leq 100$ µs	I_{FSM}	1.5	A
Power dissipation	$T_{amb} \leq 25$ °C	P_V	170	mW
Junction temperature		T_j	100	°C

For technical questions, contact: sensorstechsupport@vishay.com
THIS DOCUMENT IS SUBJECT TO CHANGE WITHOUT NOTICE. THE PRODUCTS DESCRIBED HEREIN AND THIS DOCUMENT ARE SUBJECT TO SPECIFIC DISCLAIMERS, SET FORTH AT www.vishay.com/doc?91000

ABSOLUTE MAXIMUM RATINGS (T_{amb} = 25 °C, unless otherwise specified)				
PARAMETER	**TEST CONDITION**	**SYMBOL**	**VALUE**	**UNIT**
OUTPUT (DETECTOR)				
Collector emitter voltage		V_{CEO}	32	V
Emitter collector voltage		V_{ECO}	5	V
Collector current		I_C	50	mA
Power dissipation	$T_{amb} \leq 25$ °C	P_V	100	mW
Junction temperature		T_j	100	°C

ABSOLUTE MAXIMUM RATINGS (T_{amb} = 25 °C, unless otherwise specified)

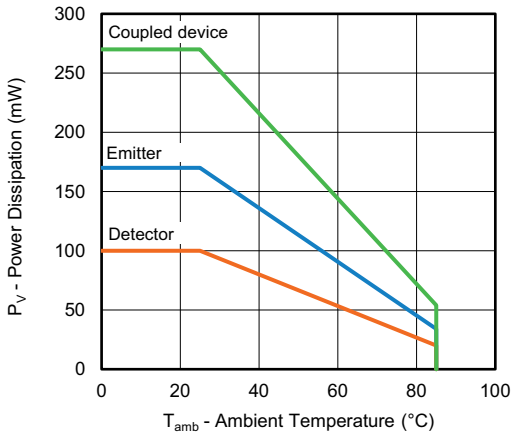

Fig. 1 - Power Dissipation Limit vs. Ambient Temperature

BASIC CHARACTERISTICS (T_{amb} = 25 °C, unless otherwise specified)						
PARAMETER	**TEST CONDITION**	**SYMBOL**	**MIN.**	**TYP.**	**MAX.**	**UNIT**
SENSOR						
Collector current	V_{CE} = 5 V, I_F = 20 mA, d = 1 mm (Fig. 2)	I_C (1)	0.6	0.7	-	mA
Cross talk current	V_{CE} = 5 V, I_F = 20 mA	I_{CX} (2)	-	-	1	µA
Collector emitter saturation voltage	I_F = 20 mA, I_C = 0.1 mA, d = 1 mm (Fig. 2)	V_{CEsat} (1)	-	-	0.3	V
INPUT (EMITTER)						
Forward voltage	I_F = 100 mA	V_F	-	1.6	1.7	V
Peak wavelength	I_F = 100 mA	λ_P	950	-	-	nm
OUTPUT (DETECTOR)						
Collector emitter voltage	I_C = 1 mA	V_{CEO}	32	-	-	V
Emitter collector voltage	I_E = 100 µA	V_{ECO}	5	-	-	V
Collector dark current	V_{CE} = 10 V, I_F = 0 A, E = 0 lx	I_{CEO}	-	-	200	nA

Notes

(1) Measured with the “Kodak neutral test card”, white side with 90 % diffuse reflectance

(2) Measured without reflecting medium

For technical questions, contact: sensorstechsupport@vishay.com
THIS DOCUMENT IS SUBJECT TO CHANGE WITHOUT NOTICE. THE PRODUCTS DESCRIBED HEREIN AND THIS DOCUMENT ARE SUBJECT TO SPECIFIC DISCLAIMERS, SET FORTH AT www.vishay.com/doc?91000

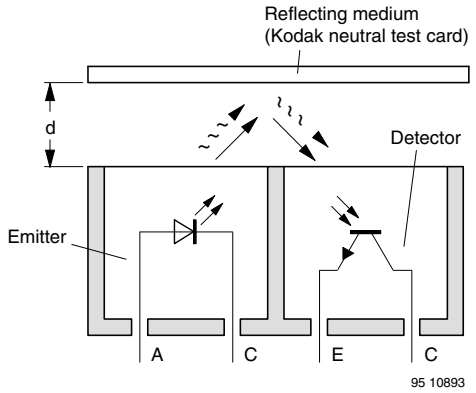

Fig. 2 - Test Condition

BASIC CHARACTERISTICS (T_{amb} = 25 °C, unless otherwise specified)

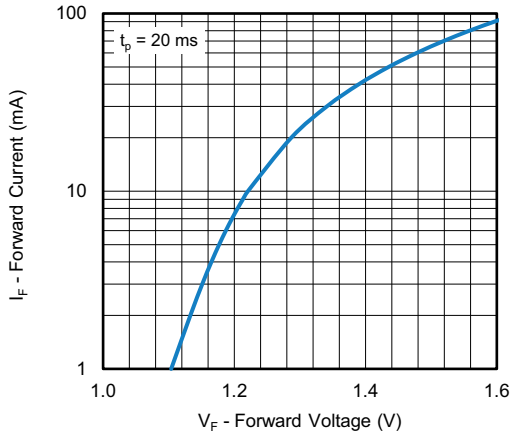

Fig. 3 - Forward Current vs. Forward Voltage

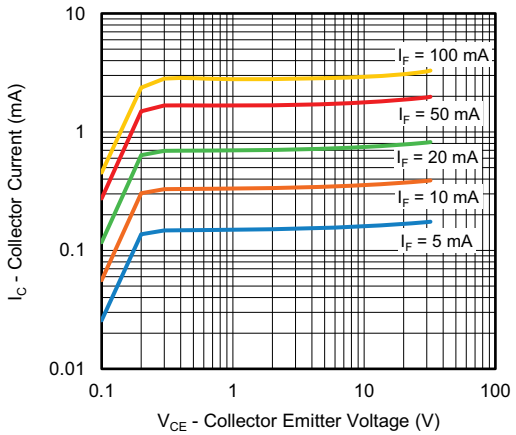

Fig. 5 - Collector Current vs. Collector Emitter Voltage

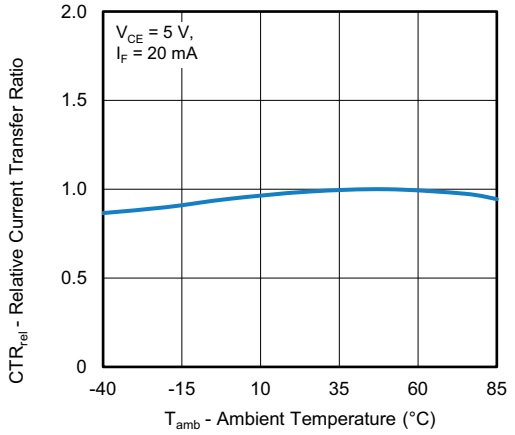

Fig. 4 - Relative Current Transfer Ratio vs. Ambient Temperature

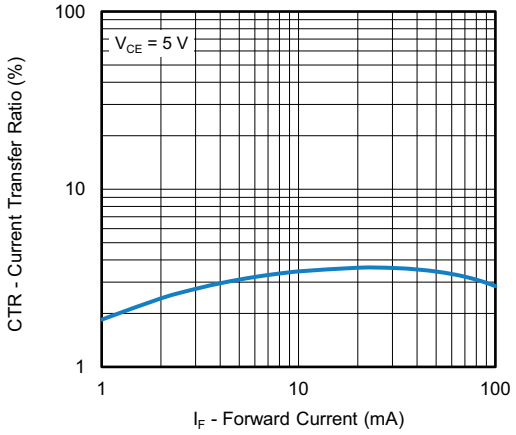

Fig. 6 - Current Transfer Ratio vs. Forward Current

For technical questions, contact: sensorstechsupport@vishay.com
THIS DOCUMENT IS SUBJECT TO CHANGE WITHOUT NOTICE. THE PRODUCTS DESCRIBED HEREIN AND THIS DOCUMENT ARE SUBJECT TO SPECIFIC DISCLAIMERS, SET FORTH AT www.vishay.com/doc?91000

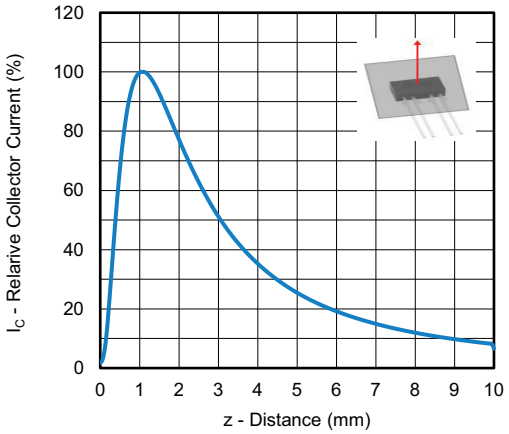

Fig. 7 - Collector Current vs. Distance

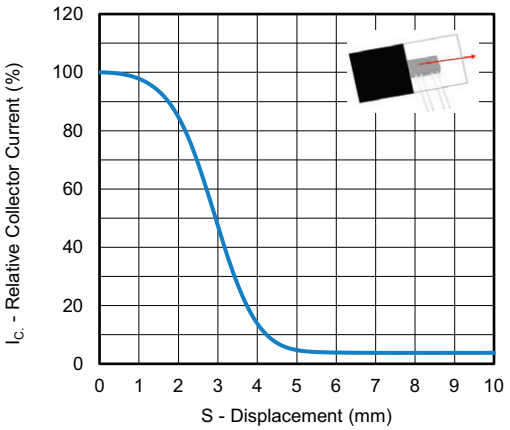

Fig. 8 - Relative Collector Current vs. Displacement

For technical questions, contact: sensorstechsupport@vishay.com
THIS DOCUMENT IS SUBJECT TO CHANGE WITHOUT NOTICE. THE PRODUCTS DESCRIBED HEREIN AND THIS DOCUMENT ARE SUBJECT TO SPECIFIC DISCLAIMERS, SET FORTH AT www.vishay.com/doc?91000

PACKAGE DIMENSIONS in millimeters

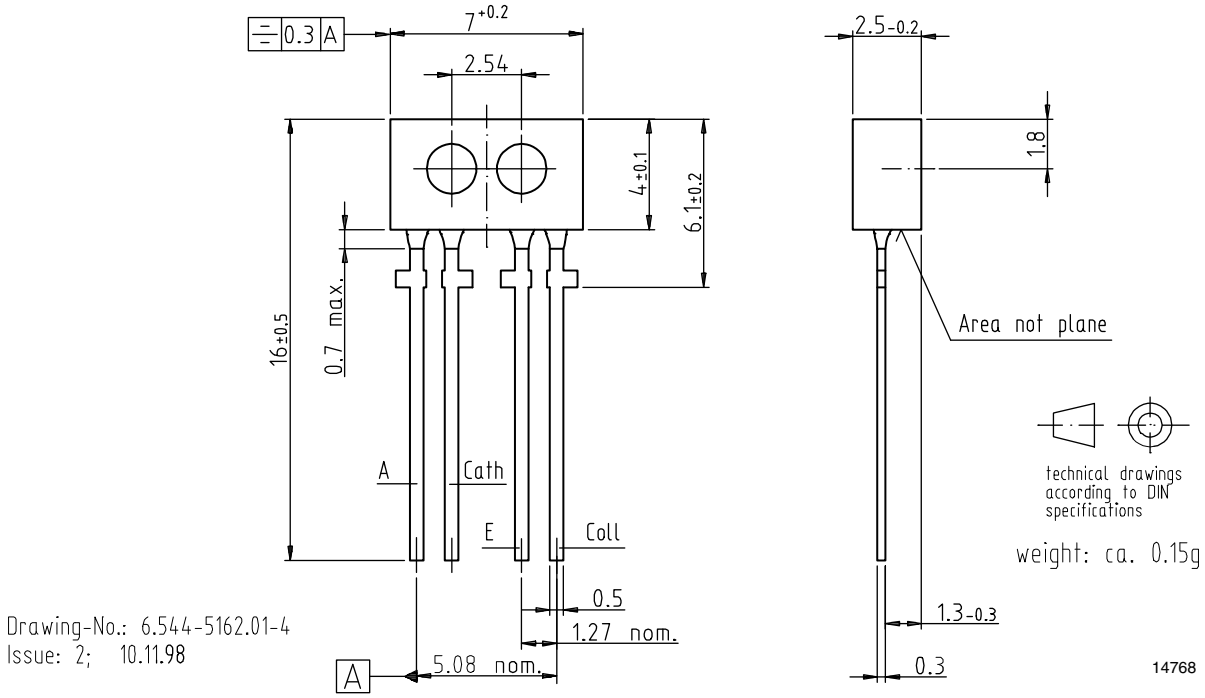

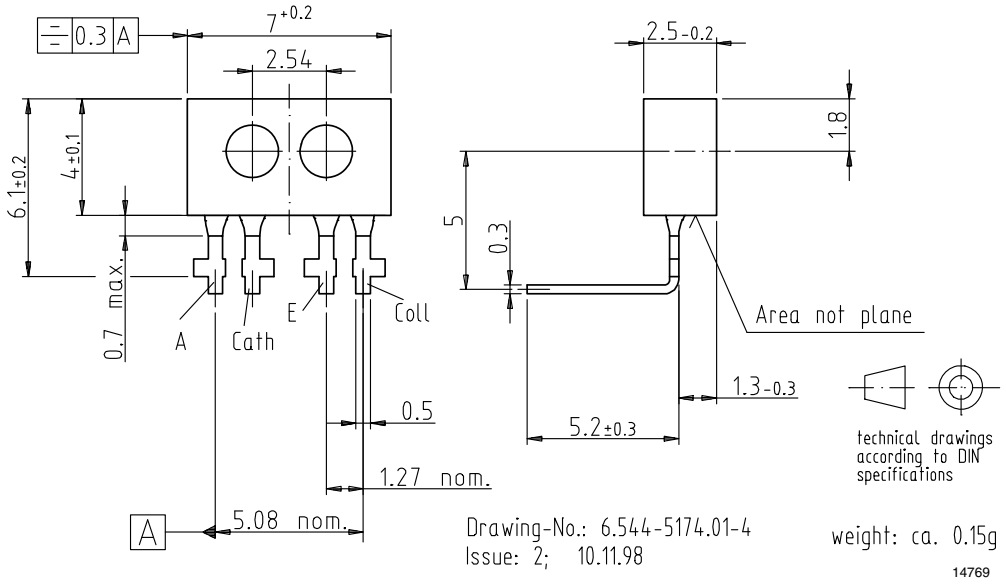

For technical questions, contact: sensorstechsupport@vishay.com
THIS DOCUMENT IS SUBJECT TO CHANGE WITHOUT NOTICE. THE PRODUCTS DESCRIBED HEREIN AND THIS DOCUMENT ARE SUBJECT TO SPECIFIC DISCLAIMERS, SET FORTH AT www.vishay.com/doc?91000

Packaging and Ordering Information

PART NUMBER	MOQ [1]	PCS PER TUBE	TUBE SPEC. (FIGURE)	CONSTITUENTS (FORMS)
CNY70	4000	80	1	28
TCPT1300X01	2000	Reel	[2]	29
TCRT1000	1000	Bulk	-	26
TCRT1010	1000	Bulk	-	26
TCRT5000	4500	50	2	27
TCRT5000L	2400	48	3	27
TCST1030	5200	65	5	24
TCST1030L	2600	65	6	24
TCST1103	1020	85	4	24
TCST1202	1020	85	4	24
TCST1230	4800	60	7	24
TCST1300	1020	85	4	24
TCST2103	1020	85	4	24
TCST2202	1020	85	4	24
TCST2300	1020	85	4	24
TCST5250	4860	30	8	24
TCUT1300X01	2000	Reel	[2]	29
TCZT8020-PAER	2500	Bulk	-	22

Notes

[1] MOQ: minimum order quantity

[2] Please refer to datasheets

TUBE SPECIFICATION FIGURES

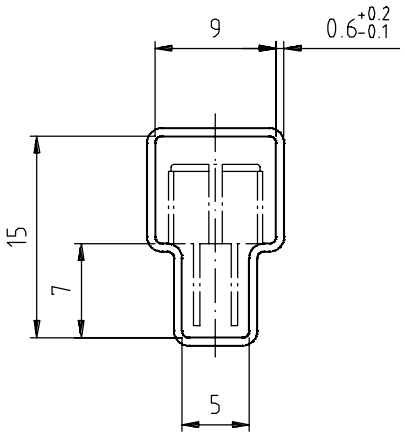

With rubber stopper
Tolerance: ±0.5mm
Length: 575±1mm

Drawing-No.: 9.700-5097.01-4
Issue: 1; 25.02.00

15198

Fig. 1

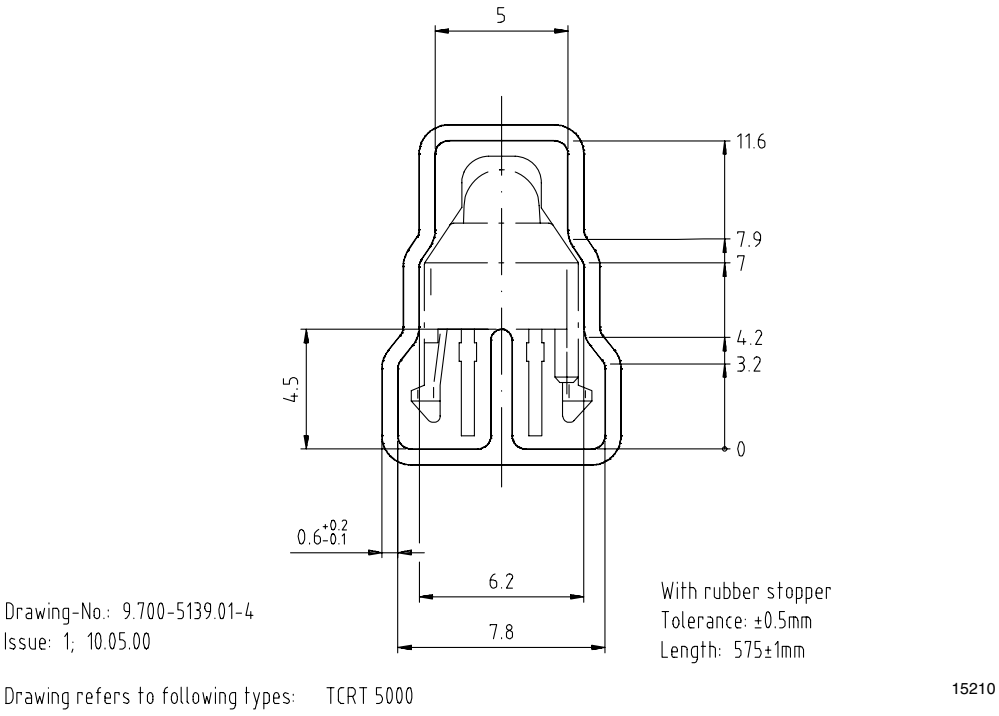
5
11.6
7.9
7
4.2
3.2
4.5
0
0.6-0.1 +0.2
6.2
7.8
Drawing-No.: 9.700-5139.01-4
Issue: 1; 10.05.00
With rubber stopper
Tolerance: ±0.5mm
Length: 575±1mm
Drawing refers to following types: TCRT 5000
15210

Fig. 2

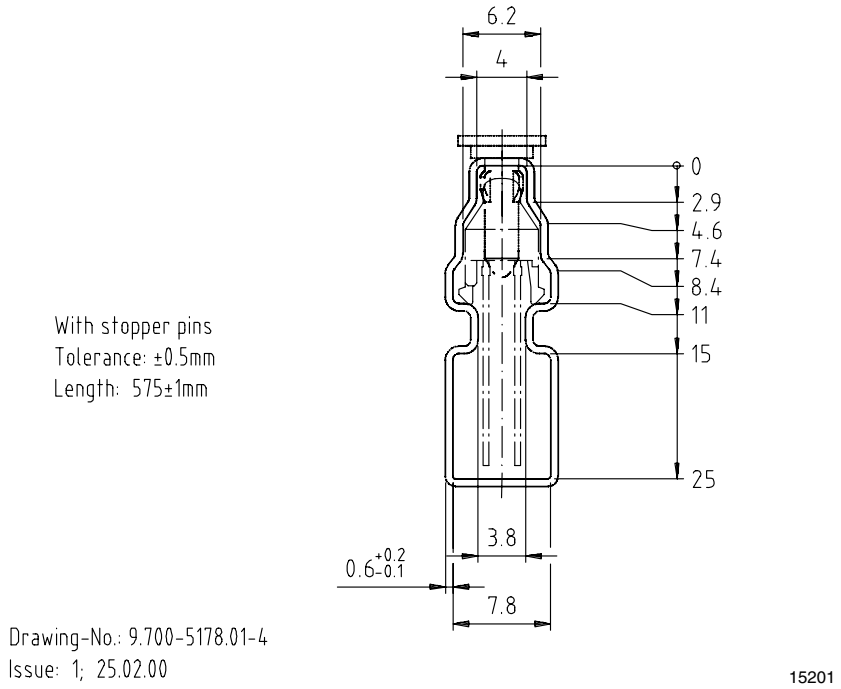
6.2
4
0
2.9
4.6
7.4
8.4
11
15
25
With stopper pins
Tolerance: ±0.5mm
Length: 575±1mm
3.8
0.6-0.1 +0.2
7.8
Drawing-No.: 9.700-5178.01-4
Issue: 1; 25.02.00
15201

Fig. 3

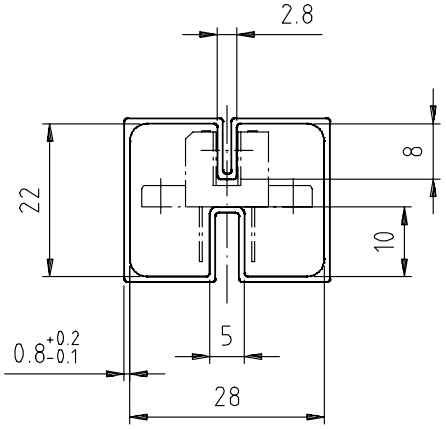

With rubber stopper
Tolerance: ±0.5mm
Length: 575±1mm

Drawing-No.: 9.700-5100.01-4
Issue: 1; 25.02.00

15199

Fig. 4

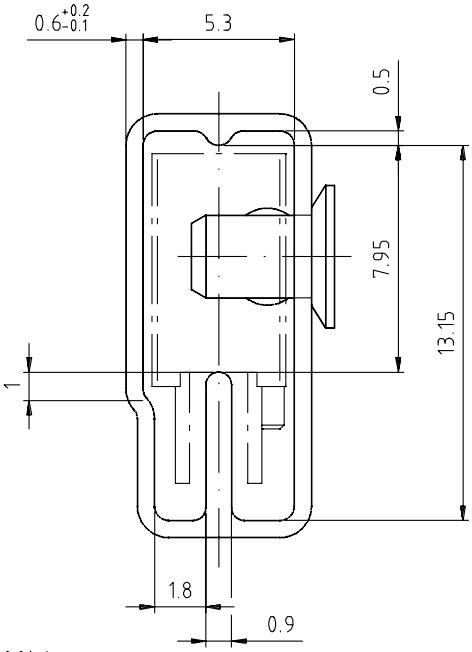

With stopper pins
Tolerance: ±0.5mm
Length: 575±1mm

Drawing-No.: 9.700-5140.01-4
Issue: 1; 25.02.00

15202

Fig. 5

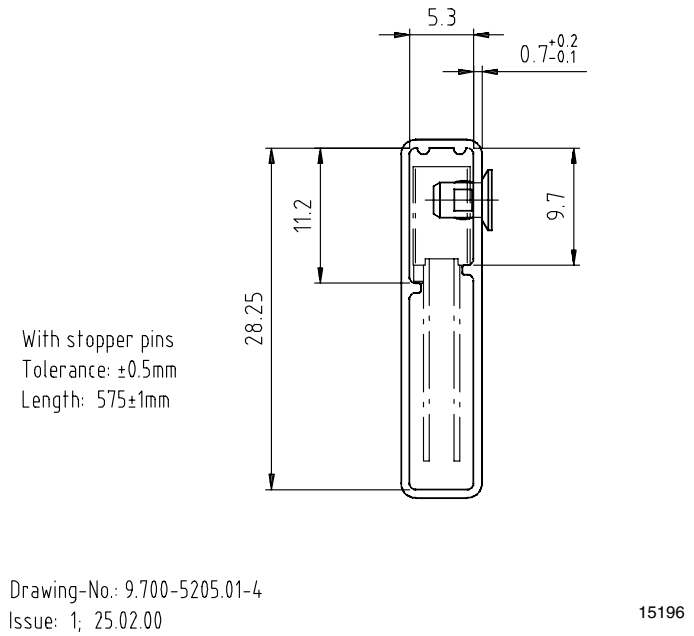
5.3
0.7+0.2-0.1
11.2
9.7
28.25
With stopper pins
Tolerance: ±0.5mm
Length: 575±1mm
Drawing-No.: 9.700-5205.01-4
Issue: 1; 25.02.00
15196

Fig. 6

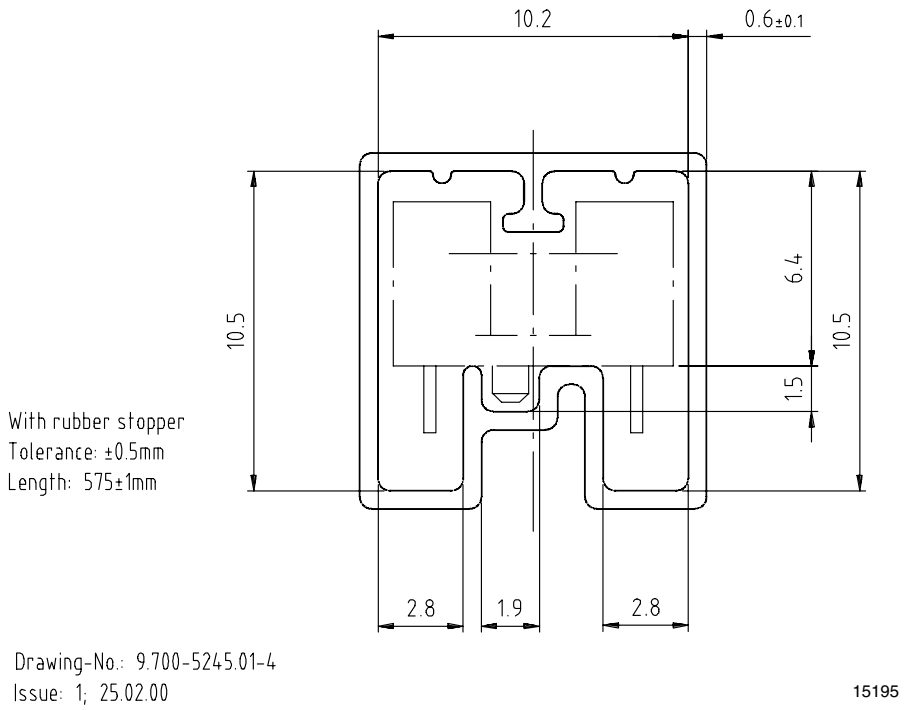
10.2
0.6±0.1
10.5
6.4
10.5
1.5
With rubber stopper
Tolerance: ±0.5mm
Length: 575±1mm
2.8
1.9
2.8
Drawing-No.: 9.700-5245.01-4
Issue: 1; 25.02.00
15195

Fig. 7

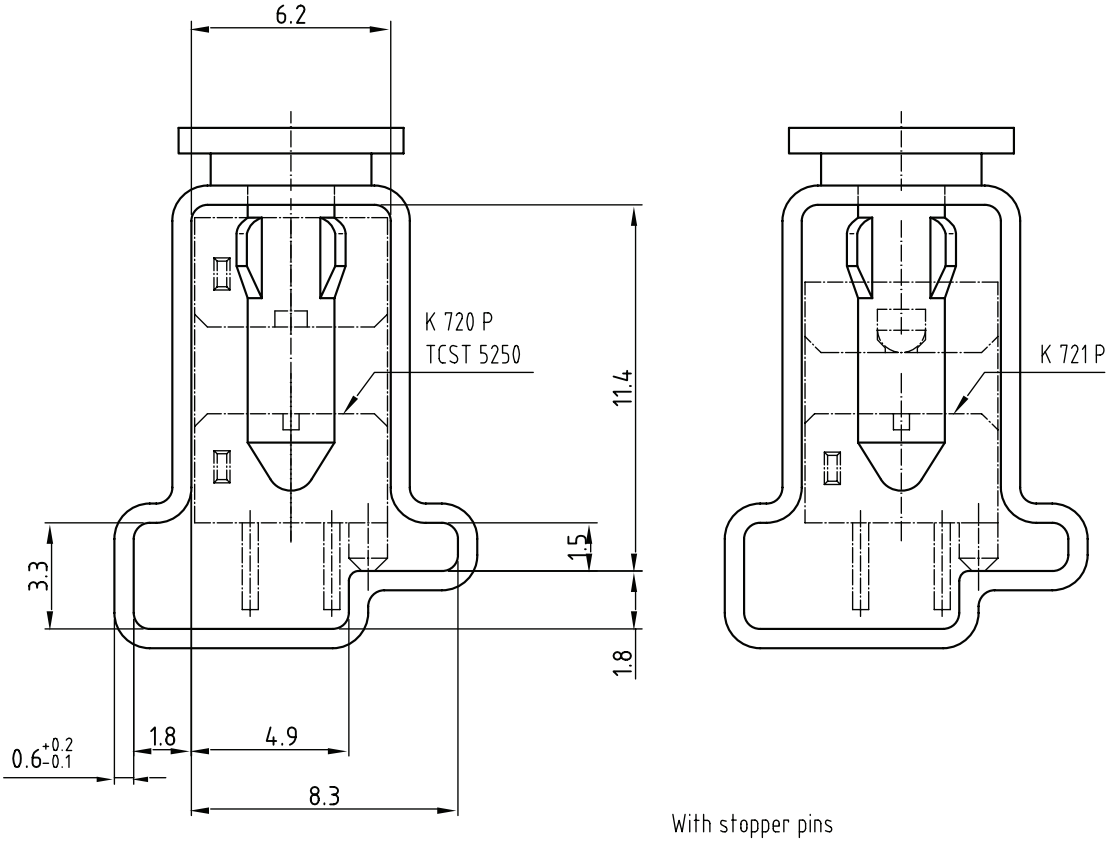

Drawing-No.: 9.700-5222.01-4
Issue: 2; 19.11.04
20257

With stopper pins
Tolerance: ±0.5mm
Length: 450±1mm
All dimensions in mm

Fig. 8

Disclaimer

ALL PRODUCT, PRODUCT SPECIFICATIONS AND DATA ARE SUBJECT TO CHANGE WITHOUT NOTICE TO IMPROVE RELIABILITY, FUNCTION OR DESIGN OR OTHERWISE.

Vishay Intertechnology, Inc., its affiliates, agents, and employees, and all persons acting on its or their behalf (collectively, “Vishay”), disclaim any and all liability for any errors, inaccuracies or incompleteness contained in any datasheet or in any other disclosure relating to any product.

Vishay makes no warranty, representation or guarantee regarding the suitability of the products for any particular purpose or the continuing production of any product. To the maximum extent permitted by applicable law, Vishay disclaims (i) any and all liability arising out of the application or use of any product, (ii) any and all liability, including without limitation special, consequential or incidental damages, and (iii) any and all implied warranties, including warranties of fitness for particular purpose, non-infringement and merchantability.

Statements regarding the suitability of products for certain types of applications are based on Vishay's knowledge of typical requirements that are often placed on Vishay products in generic applications. Such statements are not binding statements about the suitability of products for a particular application. It is the customer's responsibility to validate that a particular product with the properties described in the product specification is suitable for use in a particular application. Parameters provided in datasheets and / or specifications may vary in different applications and performance may vary over time. All operating parameters, including typical parameters, must be validated for each customer application by the customer's technical experts. Product specifications do not expand or otherwise modify Vishay's terms and conditions of purchase, including but not limited to the warranty expressed therein.

Hyperlinks included in this datasheet may direct users to third-party websites. These links are provided as a convenience and for informational purposes only. Inclusion of these hyperlinks does not constitute an endorsement or an approval by Vishay of any of the products, services or opinions of the corporation, organization or individual associated with the third-party website. Vishay disclaims any and all liability and bears no responsibility for the accuracy, legality or content of the third-party website or for that of subsequent links.

Except as expressly indicated in writing, Vishay products are not designed for use in medical, life-saving, or life-sustaining applications or for any other application in which the failure of the Vishay product could result in personal injury or death. Customers using or selling Vishay products not expressly indicated for use in such applications do so at their own risk. Please contact authorized Vishay personnel to obtain written terms and conditions regarding products designed for such applications.

No license, express or implied, by estoppel or otherwise, to any intellectual property rights is granted by this document or by any conduct of Vishay. Product names and markings noted herein may be trademarks of their respective owners.

© 2023 VISHAY INTERTECHNOLOGY, INC. ALL RIGHTS RESERVED