Optocoupler, Phototransistor Output, High Temperature, 110 °C, Rated

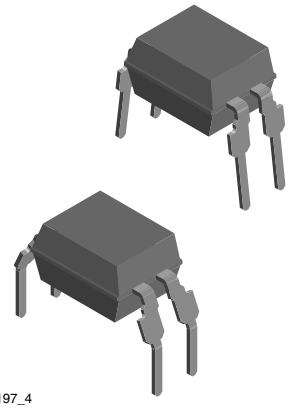

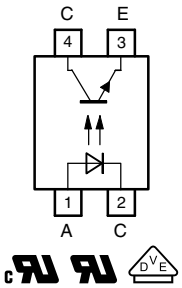

17197_4

LINKS TO ADDITIONAL RESOURCES

Related Documents

DESCRIPTION

The TCET111., TCET111.G consists of a phototransistor optically coupled to a gallium arsenide infrared-emitting diode in a 4 pin plastic dual inline package.

APPLICATIONS

Circuits for safe protective separation against electrical shock according to safety class II (reinforced isolation):

- for appl. class I to IV at mains voltage ≤ 300 V
- for appl. class I to III at mains voltage ≤ 600 V according to DIN EN 60747-5-5 (VDE 0884), suitable for:
  - Switch-mode power supplies
  - Line receiver
  - Computer peripheral interface
  - Microprocessor system interface

FEATURES

- CTR offered in 9 groups
- Isolation materials according to UL 94 V-0
- Pollution degree 2 (DIN / VDE 0110 / resp. IEC 60664)
- Climatic classification 55 / 100 / 21 (IEC 60068 part 1)
- Special construction: therefore, extra low coupling capacity of typical 0.2 pF, high common mode rejection
- Low temperature coefficient of CTR
- Temperature range -40 °C to +110 °C
- Rated impulse voltage (transient overvoltage) V_{IOTM} = 6 kV_{peak}
- Isolation test voltage (partial discharge test voltage) V_{pd} = 1.6 kV
- Rated isolation voltage (RMS includes DC) V_{IOWM} = 600 V_{RMS}
- Rated recurring peak voltage (repetitive) V_{IORM} = 850 V_{peak}
- Creepage current resistance according to VDE 0303/ IEC 60112 comparative tracking index: CTI ≥ 175
- Thickness through insulation ≥ 4 mm
- External creepage distance > 8 mm
- Material categorization: for definitions of compliance please see www.vishay.com/doc?99912

Pb-free
e3
RoHS COMPLIANT

AGENCY APPROVALS

- UL
- cUL
- DIN EN 60747-5-5 (VDE 0884)
- BSI: EN 62368-1:2014

ORDERING INFORMATION

T C E T 1 1 1 # - #

PART NUMBER — PACKAGE OPTION

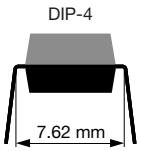

AGENCY CERTIFIED / PACKAGE	CTR (%)	
	10 mA	
UL, cUL, VDE, BSI	100 to 200	160 to 320
DIP-4	TCET1113	-
DIP-4, 400 mil	TCET1113G	TCET1114G

For technical questions, contact: optocoupleranswers@vishay.com
THIS DOCUMENT IS SUBJECT TO CHANGE WITHOUT NOTICE. THE PRODUCTS DESCRIBED HEREIN AND THIS DOCUMENT ARE SUBJECT TO SPECIFIC DISCLAIMERS, SET FORTH AT www.vishay.com/doc?91000

ABSOLUTE MAXIMUM RATINGS (T_{amb} = 25 °C, unless otherwise specified)				
PARAMETER	**TEST CONDITION**	**SYMBOL**	**VALUE**	**UNIT**
INPUT				
Reverse voltage		V_R	6	V
Forward current		I_F	60	mA
Forward surge current	$t_p \leq 10$ µs	I_{FSM}	1.5	A
OUTPUT				
Collector emitter voltage		V_{CEO}	70	V
Emitter collector voltage		V_{ECO}	7	V
Collector current		I_C	50	mA
Collector peak current	$t_p/T = 0.5$, $t_p \leq 10$ ms	I_{CM}	100	mA
COUPLER				
Isolation test voltage (RMS)	t = 1 s	V_{ISO}	5000	V_{RMS}
Operating ambient temperature range		T_{amb}	-40 to +110	°C
Storage temperature range		T_{stg}	-55 to +125	°C
Soldering temperature [(1)]	2 mm from case, ≤ 10 s	T_{sld}	260	°C

Notes

- Stresses in excess of the absolute maximum ratings can cause permanent damage to the device. Functional operation of the device is not implied at these or any other conditions in excess of those given in the operational sections of this document. Exposure to absolute maximum ratings for extended periods of the time can adversely affect reliability

(1) Refer to wave profile for soldering conditions for through hole devices (DIP)

THERMAL CHARACTERISTICS			
PARAMETER	**SYMBOL**	**VALUE**	**UNIT**
LED power dissipation	P_{diss}	70	mW
Output power dissipation	P_{diss}	70	mW
Maximum LED junction temperature	$T_{jmax.}$	125	°C
Maximum output die junction temperature	$T_{jmax.}$	125	°C
Thermal resistance, junction emitter to board	θ_{EB}	173	°C/W
Thermal resistance, junction emitter to case	θ_{EC}	149	°C/W
Thermal resistance, junction detector to board	θ_{DB}	111	°C/W
Thermal resistance, junction detector to case	θ_{DC}	127	°C/W
Thermal resistance, junction emitter to junction detector	θ_{ED}	173	°C/W
Thermal resistance, board to ambient [(1)]	θ_{BA}	197	°C/W
Thermal resistance, case to ambient [(1)]	θ_{CA}	4041	°C/W

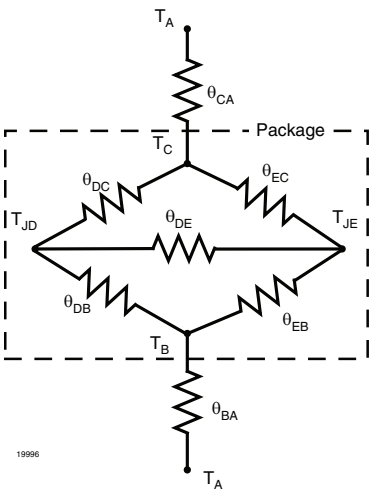

Notes

- The thermal model is represented in the thermal network below. Each resistance value given in this model can be used to calculate the temperatures at each node for a given operating condition. The thermal resistance from board to ambient will be dependent on the type of PCB, layout and thickness of copper traces. For a detailed explanation of the thermal model, please reference Vishay's "Thermal Characteristics of Optocouplers" application note

(1) For 2 layer FR4 board (4" x 3" x 0.062")

For technical questions, contact: optocoupleranswers@vishay.com
THIS DOCUMENT IS SUBJECT TO CHANGE WITHOUT NOTICE. THE PRODUCTS DESCRIBED HEREIN AND THIS DOCUMENT ARE SUBJECT TO SPECIFIC DISCLAIMERS, SET FORTH AT www.vishay.com/doc?91000

ELECTRICAL CHARACTERISTICS (T_{amb} = 25 °C, unless otherwise specified)						
PARAMETER	**TEST CONDITION**	**SYMBOL**	**MIN.**	**TYP.**	**MAX.**	**UNIT**
INPUT						
Forward voltage	I_F = 50 mA	V_F	-	1.25	1.6	V
Junction capacitance	V_R = 0, f = 1 MHz	C_j	-	50	-	pF
OUTPUT						
Collector emitter voltage	I_C = 1 mA	V_{CEO}	70	-	-	V
Emitter collector voltage	I_E = 100 µA	V_{ECO}	7	-	-	V
Collector emitter cut-off current	V_{CE} = 20 V, I_F = 0 A	I_{CEO}	-	10	100	nA
COUPLER						
Collector emitter saturation voltage	I_F = 10 mA, I_C = 1 mA	V_{CEsat}	-	-	0.3	V
Cut-off frequency	V_{CE} = 5 V, I_F = 10 mA, R_L = 100 Ω	f_c	-	110	-	kHz
Coupling capacitance	f = 1 MHz	C_k	-	0.6	-	pF

Note

(1) Minimum and maximum values are testing requirements. Typical values are characteristics of the device and are the result of engineering evaluation. Typical values are for information only and are not part of the testing requirements.

CURRENT TRANSFER RATIO (T_{amb} = 25 °C, unless otherwise specified)							
PARAMETER	**TEST CONDITION**	**PART**	**SYMBOL**	**MIN.**	**TYP.**	**MAX.**	**UNIT**
I_C/I_F	V_{CE} = 5 V, I_F = 1 mA	TCET1112G	CTR	22	45	-	%
		TCET1113, TCET1113G	CTR	34	70	-	%
		TCET1114G	CTR	56	90	-	%
	V_{CE} = 5 V, I_F = 5 mA	TCET1110G	CTR	50	-	600	%
	V_{CE} = 5 V, I_F = 10 mA	TCET1112G	CTR	63	-	125	%
		TCET1113, TCET1113G	CTR	100	-	200	%
		TCET1114G	CTR	160	-	320	%

SAFETY AND INSULATION RATED PARAMETERS						
PARAMETER	**TEST CONDITION**	**SYMBOL**	**MIN.**	**TYP.**	**MAX.**	**UNIT**
Partial discharge test voltage - routine test	100 %, t_{test} = 1 s	V_{pd}	1.6			kV
Partial discharge test voltage - lot test (sample test)	t_{Tr} = 60 s, t_{test} = 10 s, (see figure 2)	V_{IOTM}	8			kV
		V_{pd}	1.36			kV
Insulation resistance	V_{IO} = 500 V	R_{IO}	10^{12}			Ω
	V_{IO} = 500 V, T_{amb} = 100 °C	R_{IO}	10^{11}			Ω
	V_{IO} = 500 V, T_{amb} = 150 °C (construction test only)	R_{IO}	10^9			Ω
Forward current		I_{si}			130	mA
Power dissipation		P_{so}			265	mW
Rated impulse voltage		V_{IOTM}			6	kV
Safety temperature		T_{si}			150	°C

Note

- According to DIN EN 60747-5-5 (see Fig. 2). This optocoupler is suitable for safe electrical isolation only within the safety ratings. Compliance with the safety ratings shall be ensured by means of suitable protective circuits.

For technical questions, contact: optocoupleranswers@vishay.com
THIS DOCUMENT IS SUBJECT TO CHANGE WITHOUT NOTICE. THE PRODUCTS DESCRIBED HEREIN AND THIS DOCUMENT ARE SUBJECT TO SPECIFIC DISCLAIMERS, SET FORTH AT www.vishay.com/doc?91000

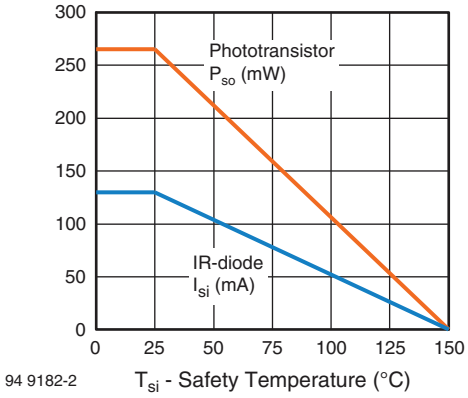

Fig. 1 - Derating Diagram

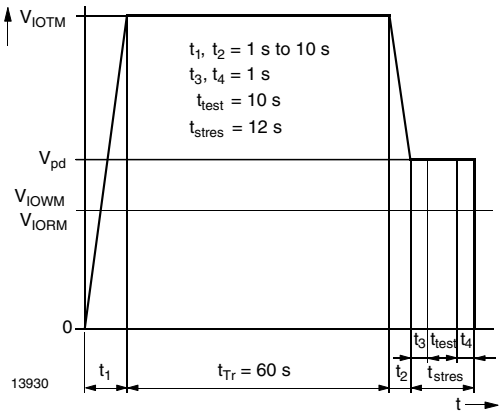

Fig. 2 - Test Pulse Diagram for Sample Test according to DIN EN 60747-5-5 (VDE 0884-5)

SWITCHING CHARACTERISTICS (T_{amb} = 25 °C, unless otherwise specified)						
PARAMETER	**TEST CONDITION**	**SYMBOL**	**MIN.**	**TYP.**	**MAX.**	**UNIT**
Delay time	V_S = 5 V, I_C = 2 mA, R_L = 100 Ω, (see figure 3)	t_d		3		µs
Rise time	V_S = 5 V, I_C = 2 mA, R_L = 100 Ω, (see figure 3)	t_r		3		µs
Fall time	V_S = 5 V, I_C = 2 mA, R_L = 100 Ω, (see figure 3)	t_f		4.7		µs
Storage time	V_S = 5 V, I_C = 2 mA, R_L = 100 Ω, (see figure 3)	t_s		0.3		µs
Turn-on time	V_S = 5 V, I_C = 2 mA, R_L = 100 Ω, (see figure 3)	t_{on}		6		µs
Turn-off time	V_S = 5 V, I_C = 2 mA, R_L = 100 Ω, (see figure 3)	t_{off}		5		µs
Turn-on time	V_S = 5 V, I_F = 10 mA, R_L = 1 kΩ, (see figure 4)	t_{on}		9		µs
Turn-off time	V_S = 5 V, I_F = 10 mA, R_L = 1 kΩ, (see figure 4)	t_{off}		10		µs

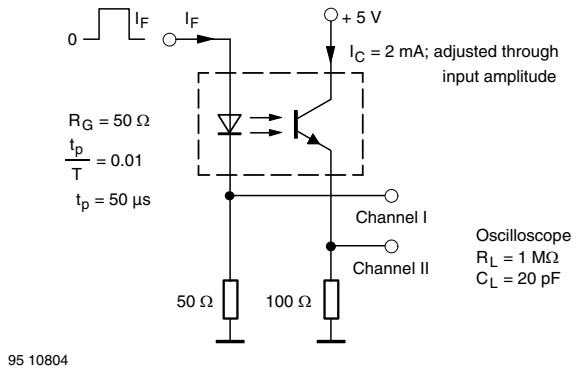

Fig. 3 - Test Circuit, Non-Saturated Operation

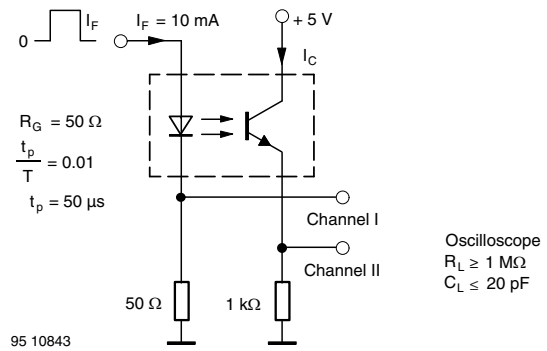

Fig. 4 - Test Circuit, Saturated Operation

For technical questions, contact: optocoupleranswers@vishay.com
THIS DOCUMENT IS SUBJECT TO CHANGE WITHOUT NOTICE. THE PRODUCTS DESCRIBED HEREIN AND THIS DOCUMENT ARE SUBJECT TO SPECIFIC DISCLAIMERS, SET FORTH AT www.vishay.com/doc?91000

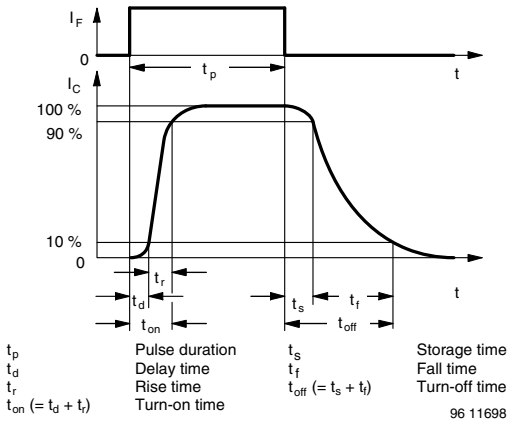

Fig. 5 - Switching Times

TYPICAL CHARACTERISTICS (T_{amb} = 25 °C, unless otherwise specified)

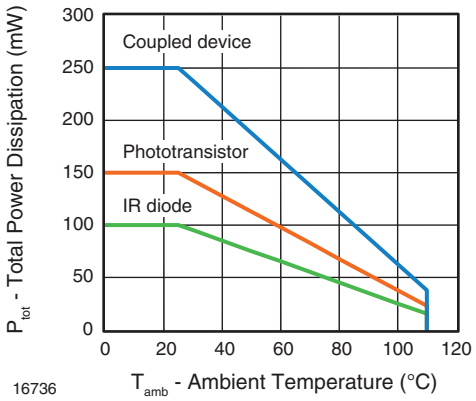

Fig. 6 - Total Power Dissipation vs. Ambient Temperature

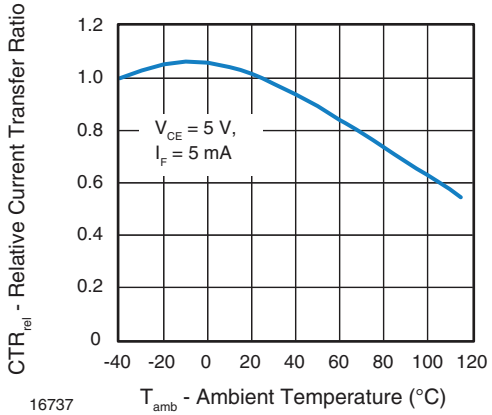

Fig. 8 - Relative Current Transfer Ratio vs. Ambient Temperature

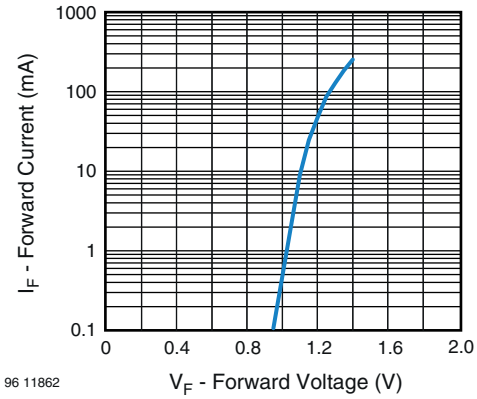

Fig. 7 - Forward Current vs. Forward Voltage

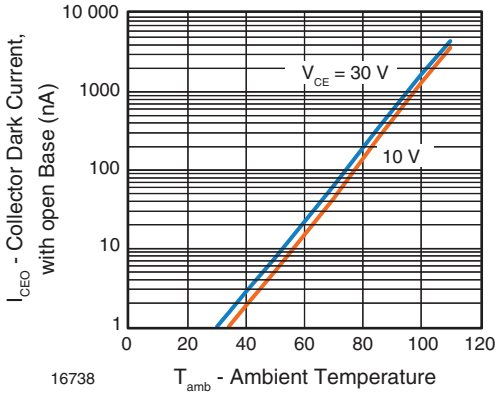

Fig. 9 - Collector Dark Current vs. Ambient Temperature

For technical questions, contact: optocoupleranswers@vishay.com
THIS DOCUMENT IS SUBJECT TO CHANGE WITHOUT NOTICE. THE PRODUCTS DESCRIBED HEREIN AND THIS DOCUMENT ARE SUBJECT TO SPECIFIC DISCLAIMERS, SET FORTH AT www.vishay.com/doc?91000

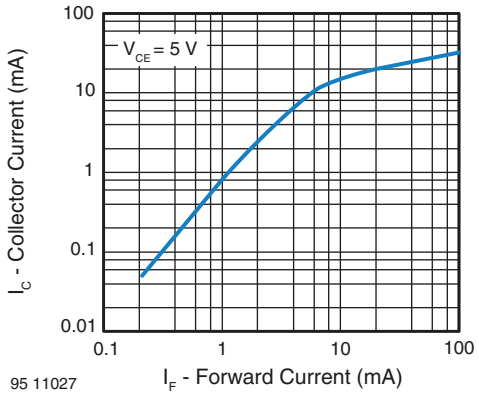

Fig. 10 - Collector Current vs. Forward Current

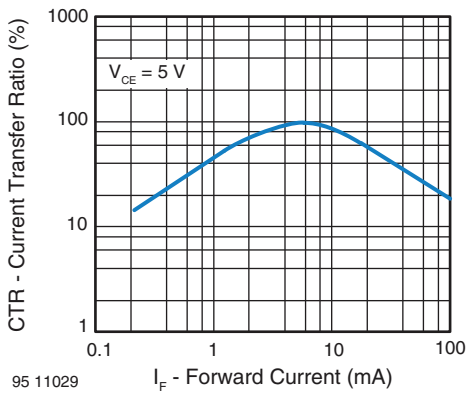

Fig. 13 - Current Transfer Ratio vs. Forward Current

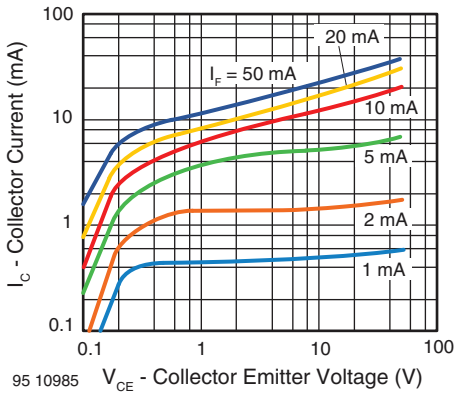

Fig. 11 - Collector Current vs. Collector Emitter Voltage

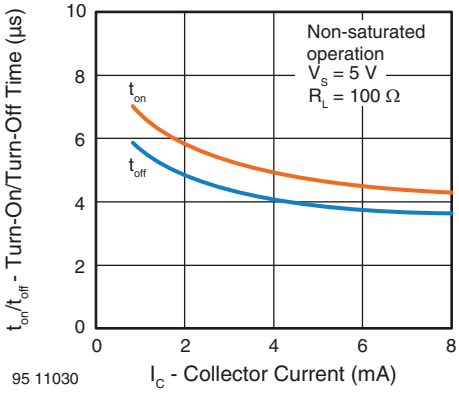

Fig. 14 - Turn-on/off Time vs. Collector Current

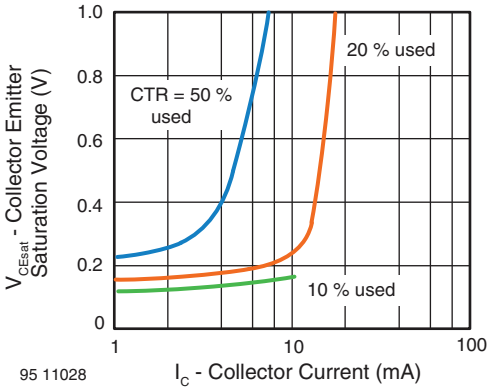

Fig. 12 - Collector Emitter Saturation Voltage vs. Collector Current

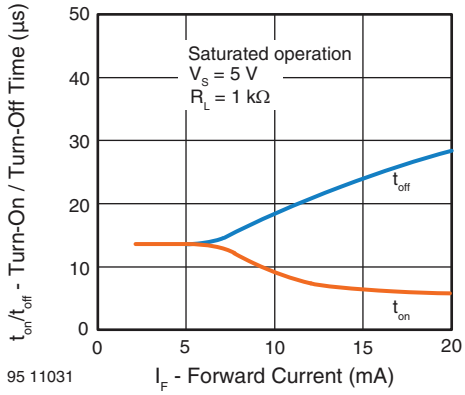

Fig. 15 - Turn-on/off Time vs. Forward Current

THIS DOCUMENT IS SUBJECT TO CHANGE WITHOUT NOTICE. THE PRODUCTS DESCRIBED HEREIN AND THIS DOCUMENT ARE SUBJECT TO SPECIFIC DISCLAIMERS, SET FORTH AT www.vishay.com/doc?91000

PACKAGE DIMENSIONS in millimeters

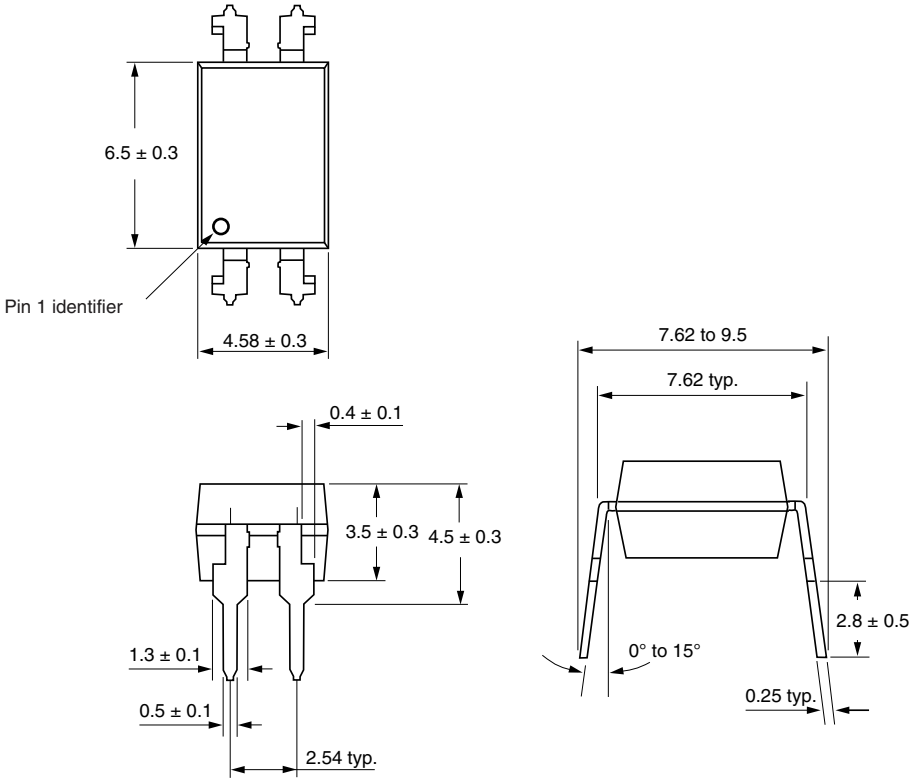

TCET1110G type

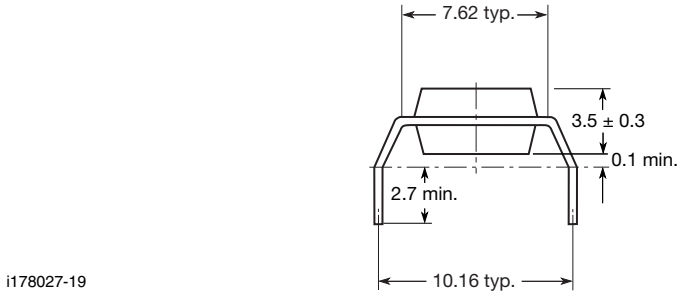

PACKAGE MARKING (example)

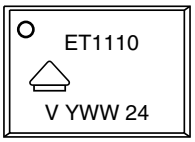

For technical questions, contact: optocoupleranswers@vishay.com
THIS DOCUMENT IS SUBJECT TO CHANGE WITHOUT NOTICE. THE PRODUCTS DESCRIBED HEREIN AND THIS DOCUMENT ARE SUBJECT TO SPECIFIC DISCLAIMERS, SET FORTH AT www.vishay.com/doc?91000

Disclaimer

ALL PRODUCT, PRODUCT SPECIFICATIONS AND DATA ARE SUBJECT TO CHANGE WITHOUT NOTICE TO IMPROVE RELIABILITY, FUNCTION OR DESIGN OR OTHERWISE.

Vishay Intertechnology, Inc., its affiliates, agents, and employees, and all persons acting on its or their behalf (collectively, “Vishay”), disclaim any and all liability for any errors, inaccuracies or incompleteness contained in any datasheet or in any other disclosure relating to any product.

Vishay makes no warranty, representation or guarantee regarding the suitability of the products for any particular purpose or the continuing production of any product. To the maximum extent permitted by applicable law, Vishay disclaims (i) any and all liability arising out of the application or use of any product, (ii) any and all liability, including without limitation special, consequential or incidental damages, and (iii) any and all implied warranties, including warranties of fitness for particular purpose, non-infringement and merchantability.

Statements regarding the suitability of products for certain types of applications are based on Vishay's knowledge of typical requirements that are often placed on Vishay products in generic applications. Such statements are not binding statements about the suitability of products for a particular application. It is the customer's responsibility to validate that a particular product with the properties described in the product specification is suitable for use in a particular application. Parameters provided in datasheets and / or specifications may vary in different applications and performance may vary over time. All operating parameters, including typical parameters, must be validated for each customer application by the customer's technical experts. Product specifications do not expand or otherwise modify Vishay's terms and conditions of purchase, including but not limited to the warranty expressed therein.

Hyperlinks included in this datasheet may direct users to third-party websites. These links are provided as a convenience and for informational purposes only. Inclusion of these hyperlinks does not constitute an endorsement or an approval by Vishay of any of the products, services or opinions of the corporation, organization or individual associated with the third-party website. Vishay disclaims any and all liability and bears no responsibility for the accuracy, legality or content of the third-party website or for that of subsequent links.

Except as expressly indicated in writing, Vishay products are not designed for use in medical, life-saving, or life-sustaining applications or for any other application in which the failure of the Vishay product could result in personal injury or death. Customers using or selling Vishay products not expressly indicated for use in such applications do so at their own risk. Please contact authorized Vishay personnel to obtain written terms and conditions regarding products designed for such applications.

No license, express or implied, by estoppel or otherwise, to any intellectual property rights is granted by this document or by any conduct of Vishay. Product names and markings noted herein may be trademarks of their respective owners.

© 2023 VISHAY INTERTECHNOLOGY, INC. ALL RIGHTS RESERVED