Photovoltaic MOSFET Driver with Integrated Fast Turn-Off, Solid-State Relay

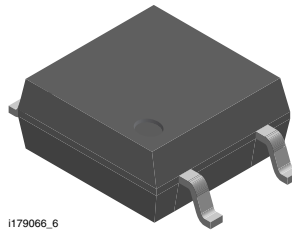

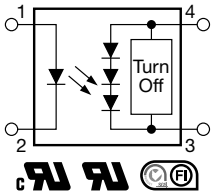

FEATURES

- Open circuit voltage at I_F = 10 mA, 8.4 V typical
- Short circuit current at I_F = 10 mA, 15 µA typical
- Isolation test voltage 3750 V_{RMS}
- Logic compatible input
- High reliability
- Integrated rapid turn-off circuitry
- Material categorization: for definitions of compliance please see www.vishay.com/doc?99912

Pb-free
e3
RoHS COMPLIANT
HALOGEN FREE
GREEN (5-2008)

ADDITIONAL RESOURCES

Design Tools | 3D Models | Footprints | SPICE Models

DESCRIPTION

The VOM1271 is a stand-alone optically isolated MOSFET driver. Unlike conventional MOSFET drivers, which require an external power supply to provide V_{CC} and or V_{DD} rails to the driver itself, the VOM1271 obtains all the required current to drive its internal circuitry from the LED current on the low voltage primary side of the isolation barrier. This saves the designer the space and cost associated with providing one or more external power supplies. The VOM1271 also integrates a turn-off circuit internal to the component itself, thus doing away with the need for additional components in order to increase the overall switching speed by decreasing the turn-off time. These features, combined with a small SOP4 package, provide designers with a small footprint, highly integrated isolated gate driver solution for a large variety of MOSFET driver applications.

APPLICATIONS

- High-side driver
- Solid-state relays
- Floating power supply
- Power control
- Data acquisition
- ATE
- Isolated solenoid drivers
- Isolated high current relay drivers
- Isolated high voltage relay drivers

AGENCY APPROVALS

- UL
- cUL
- VDE
- FIMKO

ORDERING INFORMATION

V O M 1 2 7 1 T

PART NUMBER — TAPE AND REEL

SOP-4

PACKAGE	UL, cUL, FIMKO
SOP-4	VOM1271T

Note

- For additional information on the available options refer to option information. The product is available only on tape and reel

For technical questions, contact: optocoupleranswers@vishay.com
THIS DOCUMENT IS SUBJECT TO CHANGE WITHOUT NOTICE. THE PRODUCTS DESCRIBED HEREIN AND THIS DOCUMENT ARE SUBJECT TO SPECIFIC DISCLAIMERS, SET FORTH AT www.vishay.com/doc?91000

ABSOLUTE MAXIMUM RATINGS (T_{amb} = 25 °C, unless otherwise specified)				
PARAMETER	**TEST CONDITION**	**SYMBOL**	**VALUE**	**UNIT**
SSR				
LED continous forward current		I_F	50	mA
LED reverse voltage	$I_R \leq 10$ µA	V_R	5	V
Ambient operating temperature range		T_{amb}	-40 to +100	°C
Storage temperature range		T_{stg}	-40 to +125	°C
Pin soldering temperature [1]	t = 10 s	T_{sld}	260	°C

Notes

- Stresses in excess of the absolute maximum ratings can cause permanent damage to the device. Functional operation of the device is not implied at these or any other conditions in excess of those given in the operational sections of this document. Exposure to absolute maximum ratings for extended periods of the time can adversely affect reliability

(1) Refer to reflow profile for soldering conditions for surface mounted devices (SOP)

ELECTRICAL CHARACTERISTICS (T_{amb} = 25 °C, unless otherwise specified)						
PARAMETER	**TEST CONDITION**	**SYMBOL**	**MIN.**	**TYP.**	**MAX.**	**UNIT**
LED forward voltage	I_F = 10 mA	V_F	1.2	1.4	1.6	V
Open circuit voltage	I_F = 5 mA	V_{OC}	-	8.1	-	V
	I_F = 10 mA	V_{OC}	7.8	8.4	-	V
	I_F = 20 mA	V_{OC}	-	8.7	-	V
	I_F = 30 mA	V_{OC}	-	8.9	-	V
Short circuit current	I_F = 5 mA	I_{SC}	-	7.0	-	µA
	I_F = 10 mA	I_{SC}	6.0	15.0	-	µA
	I_F = 20 mA	I_{SC}	-	30.0	-	µA
	I_F = 30 mA	I_{SC}	-	47.0	-	µA

Note

- Minimum and maximum values are testing requirements. Typical values are characteristics of the device and are the result of engineering evaluations. Typical values are for information only and are not part of the testing requirements

SWITCHING CHARACTERISTICS (T_{amb} = 25 °C, unless otherwise specified)						
PARAMETER	**TEST CONDITION**	**SYMBOL**	**MIN.**	**TYP.**	**MAX.**	**UNIT**
Turn-on time	C_L = 200 pF, I_F = 20 mA, P_W = 2 ms, duty cycle = 50 %	t_{on}	-	53	-	µs
Turn-off time		t_{off}	-	24	-	µs

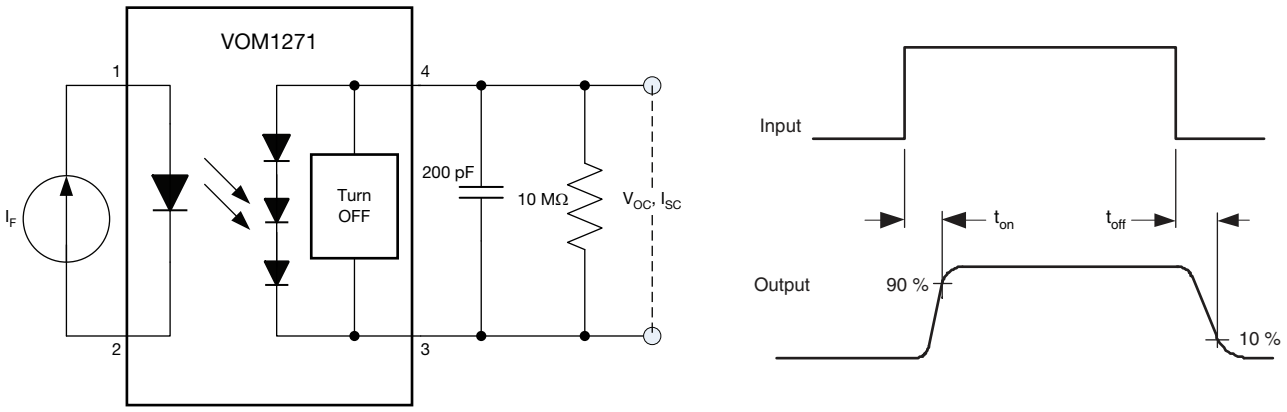

Fig. 1 - t_{on}, t_{off} Test Circuit and Waveforms

For technical questions, contact: optocoupleranswers@vishay.com
THIS DOCUMENT IS SUBJECT TO CHANGE WITHOUT NOTICE. THE PRODUCTS DESCRIBED HEREIN AND THIS DOCUMENT ARE SUBJECT TO SPECIFIC DISCLAIMERS, SET FORTH AT www.vishay.com/doc?91000

SAFETY AND INSULATION RATINGS				
PARAMETER	**TEST CONDITION**	**SYMBOL**	**VALUE**	**UNIT**
Climatic classification	According to IEC 68 part 1		55 / 110 / 21	
Pollution degree	According to DIN VDE 0109		2	
Comparative tracking index	Insulation group IIIa	CTI	175	
Maximum rated withstanding isolation voltage	According to UL1577, t = 1 min	V_{ISO}	3750	V_{RMS}
Maximum transient isolation voltage	According to DIN EN 60747-5-5	V_{IOTM}	6000	V_{peak}
Maximum repetitive peak isolation voltage	According to DIN EN 60747-5-5	V_{IORM}	707	V_{peak}
Isolation resistance	T_{amb} = 25 °C, V_{IO} = 500 V	R_{IO}	≥ 10^{12}	Ω
	T_{amb} = 100 °C, V_{IO} = 500 V	R_{IO}	≥ 10^{11}	Ω
Output safety power		P_{SO}	350	mW
Input safety current		I_{SI}	150	mA
Input safety temperature		T_S	175	°C
Creepage distance	SOP-4		≥ 5	mm
Clearance distance	SOP-4		≥ 5	mm
Insulation thickness		DTI	≥ 0.4	mm

Note

- As per DIN EN 60747-5-5, § 7.4.3.8.2, this optocoupler is suitable for “safe electrical insulation” only within the safety ratings. Compliance with the safety ratings shall be ensured by means of protective circuits

TYPICAL CHARACTERISTICS (T_{amb} = 25 °C, unless otherwise specified)

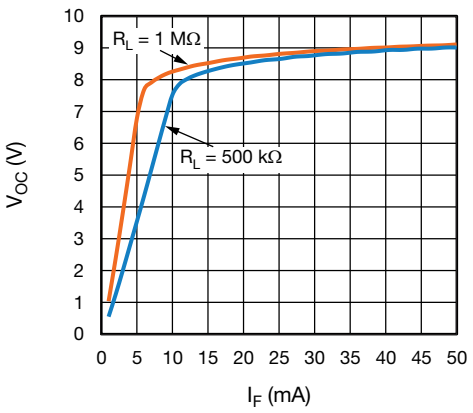

Fig. 2 - Output Open Circuit Voltage vs. LED Current

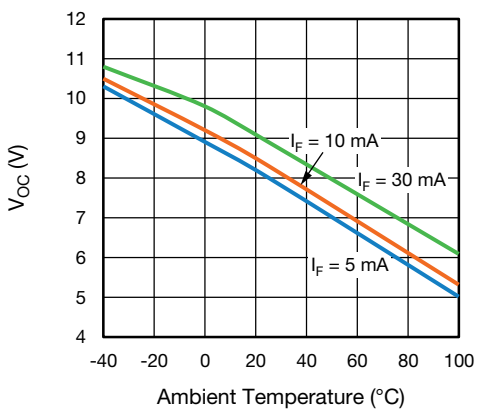

Fig. 4 - Output Open Circuit Voltage vs. Ambient Temperature

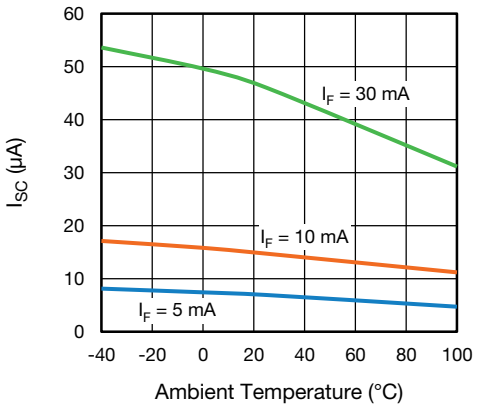

Fig. 3 - Output Short-Circuit Current vs. Ambient Temperature

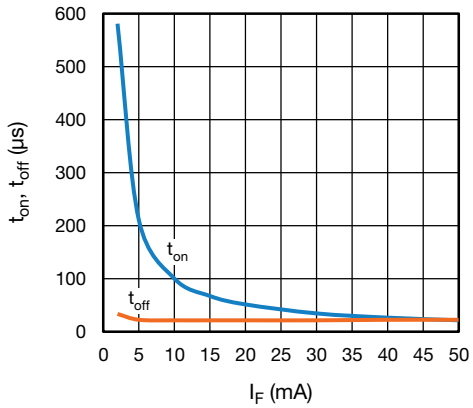

Fig. 5 - t_{on}, t_{off} vs. LED Current

THIS DOCUMENT IS SUBJECT TO CHANGE WITHOUT NOTICE. THE PRODUCTS DESCRIBED HEREIN AND THIS DOCUMENT ARE SUBJECT TO SPECIFIC DISCLAIMERS, SET FORTH AT www.vishay.com/doc?91000

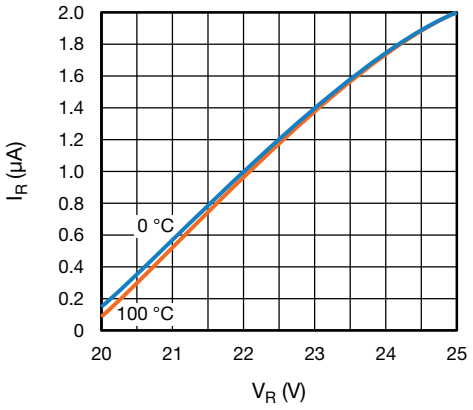

Fig. 6 - LED Reverse Current vs. Reverse Voltage

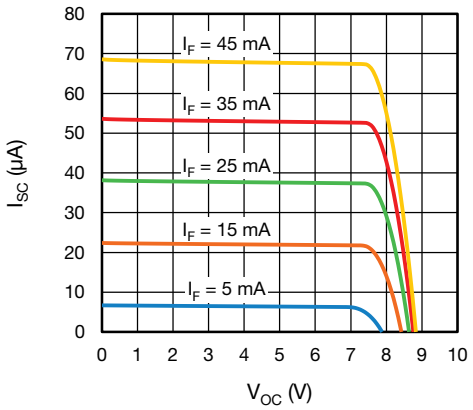

Fig. 8 - Short Circuit Output Current vs. Open Circuit Output Voltage

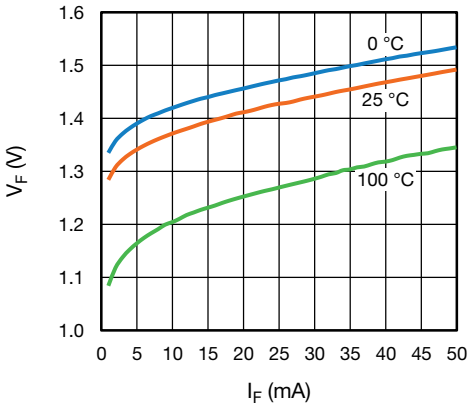

Fig. 7 - LED Forward Voltage vs. LED Forward Current

APPLICATION DESCRIPTION

Fig. 9 illustrates a standard isolated MOSFET driver such as Vishay's VO1263. Though these parts are generally capable of supplying higher output current, they lack integrated fast turn-off circuitry. Thus, if high turn-off speed is required. external circuitry needs to be provided, as illustrated in Fig. 1.

Fig. 10 illustrates the ability to do away with external turn-off circuitry with the VOM1271, by taking advantage of the VOM1271's integrated turn-off circuitry.

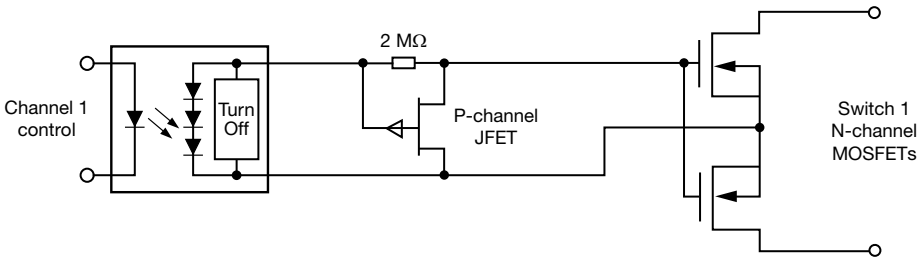

Fig. 9 - Typical MOSFET Driver Application without Integrated Fast Turn-Off

For technical questions, contact: optocoupleranswers@vishay.com
THIS DOCUMENT IS SUBJECT TO CHANGE WITHOUT NOTICE. THE PRODUCTS DESCRIBED HEREIN AND THIS DOCUMENT ARE SUBJECT TO SPECIFIC DISCLAIMERS, SET FORTH AT www.vishay.com/doc?91000

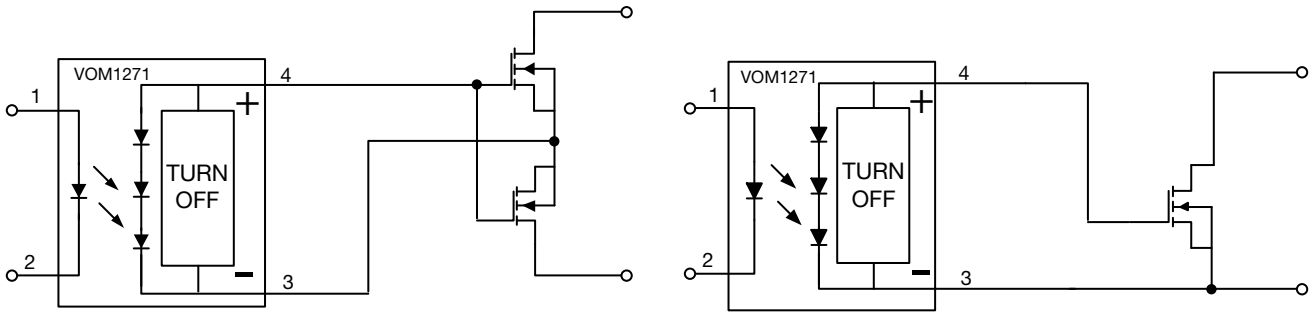

Bidirectional MOSFET Driver Application

Single MOSFET Driver Application

Fig. 10 - Typical MOSFET Driver Applications with Integrated Fast Turn-Off

PACKAGE DIMENSIONS in millimeters

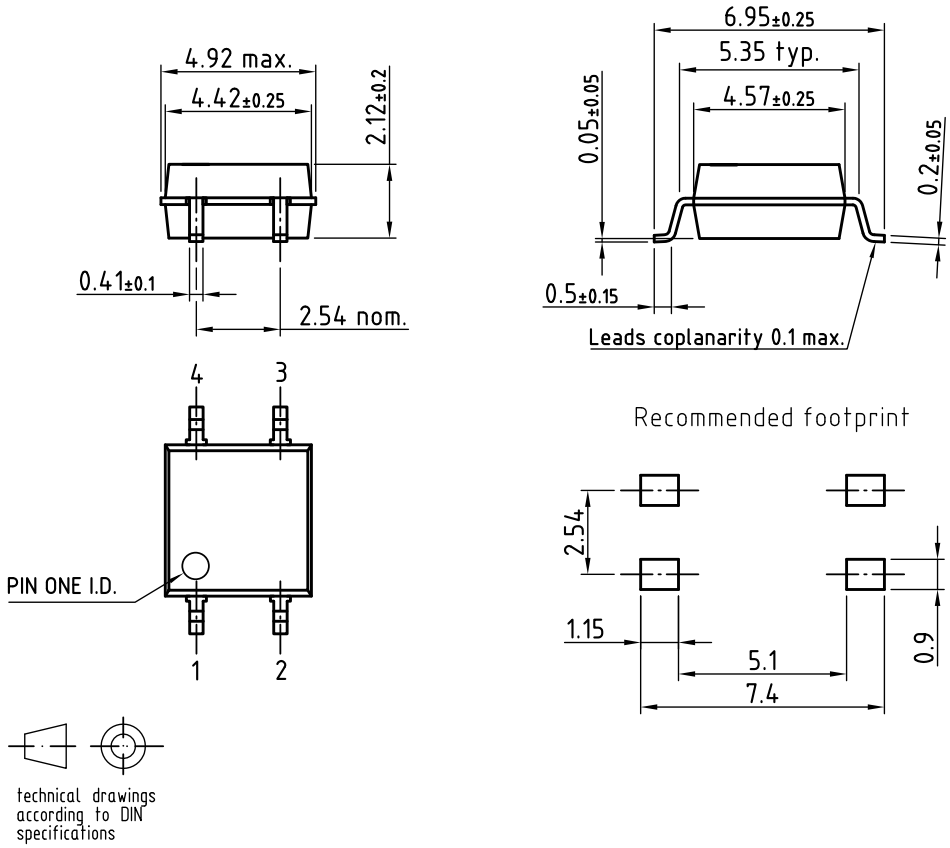

PACKAGE MARKING (example)

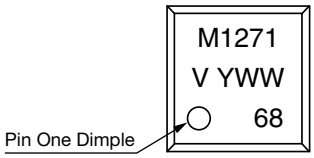

For technical questions, contact: optocoupleranswers@vishay.com
THIS DOCUMENT IS SUBJECT TO CHANGE WITHOUT NOTICE. THE PRODUCTS DESCRIBED HEREIN AND THIS DOCUMENT ARE SUBJECT TO SPECIFIC DISCLAIMERS, SET FORTH AT www.vishay.com/doc?91000

TAPE AND REEL PACKAGING

Dimensions in millimeters

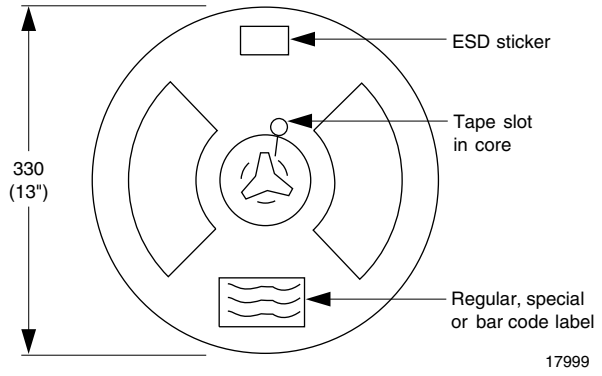

Fig. 11 - Tape and Reel Shipping Medium
(EIA-481, revision A, and IEC 60286), 2000 units per reel

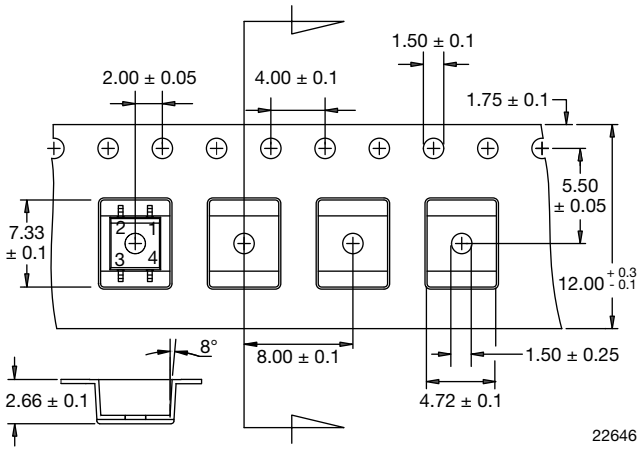

Fig. 12 - Tape Dimensions

SOLDER PROFILES

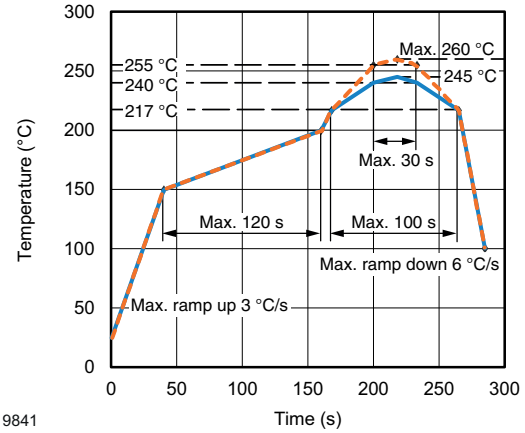

Fig. 13 - Lead (Pb)-free Reflow Solder Profile
According to J-STD-020 for SMD Devices

HANDLING AND STORAGE CONDITIONS

ESD level: HBM class 2

Floor life: unlimited

Conditions: T_{amb} < 30 °C, RH < 60 %

Moisture sensitivity level 1, according to J-STD-020

For technical questions, contact: optocoupleranswers@vishay.com
THIS DOCUMENT IS SUBJECT TO CHANGE WITHOUT NOTICE. THE PRODUCTS DESCRIBED HEREIN AND THIS DOCUMENT
ARE SUBJECT TO SPECIFIC DISCLAIMERS, SET FORTH AT www.vishay.com/doc?91000

Disclaimer

ALL PRODUCT, PRODUCT SPECIFICATIONS AND DATA ARE SUBJECT TO CHANGE WITHOUT NOTICE TO IMPROVE RELIABILITY, FUNCTION OR DESIGN OR OTHERWISE.

Vishay Intertechnology, Inc., its affiliates, agents, and employees, and all persons acting on its or their behalf (collectively, “Vishay”), disclaim any and all liability for any errors, inaccuracies or incompleteness contained in any datasheet or in any other disclosure relating to any product.

Vishay makes no warranty, representation or guarantee regarding the suitability of the products for any particular purpose or the continuing production of any product. To the maximum extent permitted by applicable law, Vishay disclaims (i) any and all liability arising out of the application or use of any product, (ii) any and all liability, including without limitation special, consequential or incidental damages, and (iii) any and all implied warranties, including warranties of fitness for particular purpose, non-infringement and merchantability.

Statements regarding the suitability of products for certain types of applications are based on Vishay's knowledge of typical requirements that are often placed on Vishay products in generic applications. Such statements are not binding statements about the suitability of products for a particular application. It is the customer's responsibility to validate that a particular product with the properties described in the product specification is suitable for use in a particular application. Parameters provided in datasheets and / or specifications may vary in different applications and performance may vary over time. All operating parameters, including typical parameters, must be validated for each customer application by the customer's technical experts. Product specifications do not expand or otherwise modify Vishay's terms and conditions of purchase, including but not limited to the warranty expressed therein.

Hyperlinks included in this datasheet may direct users to third-party websites. These links are provided as a convenience and for informational purposes only. Inclusion of these hyperlinks does not constitute an endorsement or an approval by Vishay of any of the products, services or opinions of the corporation, organization or individual associated with the third-party website. Vishay disclaims any and all liability and bears no responsibility for the accuracy, legality or content of the third-party website or for that of subsequent links.

Except as expressly indicated in writing, Vishay products are not designed for use in medical, life-saving, or life-sustaining applications or for any other application in which the failure of the Vishay product could result in personal injury or death. Customers using or selling Vishay products not expressly indicated for use in such applications do so at their own risk. Please contact authorized Vishay personnel to obtain written terms and conditions regarding products designed for such applications.

No license, express or implied, by estoppel or otherwise, to any intellectual property rights is granted by this document or by any conduct of Vishay. Product names and markings noted herein may be trademarks of their respective owners.

© 2023 VISHAY INTERTECHNOLOGY, INC. ALL RIGHTS RESERVED