TELUX LED

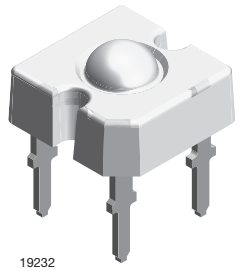

DESCRIPTION

This TELUX device is a clear, non diffused LED for applications where supreme luminous flux is required.

It is designed in an industry standard 7.62 mm square package utilizing highly developed super bright, AlInGaP technology.

The supreme heat dissipation of TELUX allows applications at high ambient temperatures.

All packing units are binned for luminous flux, forward voltage, and color to achieve the most homogeneous light appearance in application.

PRODUCT GROUP AND PACKAGE DATA

- Product group: LED
- Package: TELUX
- Product series: power
- Angle of half intensity: ± 45°

FEATURES

- High luminous flux
- Supreme heat dissipation: R_{thJP} is 90 K/W
- High operating temperature: T_{amb} = -40 °C to +110 °C
- Meets SAE and ECE color requirements for the automobile industry for color red
- Packed in tubes for automuioatic insertion
- Luminous flux, forward voltage, and color categorized for each tube
- Small mechanical tolerances allow precise usage of external reflectors or lightguides
- Compatible with wave solder processes according to CECC 00802
- ESD-withstand voltage: up to 2 kV according to JESD 22-A114-B
- AEC-Q101 qualified
- Material categorization: for definitions of compliance please see www.vishay.com/doc?99912

AUTOMOTIVE GRADE
Pb-free
e4
RoHS COMPLIANT
HALOGEN FREE
GREEN (5-2008)

APPLICATIONS

- Exterior lighting
- Tail-, stop-, and turn signals of motor vehicles
- Traffic light and signs

PARTS TABLE

PART	COLOR	LUMINOUS FLUX (mlm)			at I_F (mA)	WAVELENGTH (nm)			at I_F (mA)	FORWARD VOLTAGE (V)			at I_F (mA)	TECHNOLOGY
		MIN.	TYP.	MAX.		MIN.	TYP.	MAX.		MIN.	TYP.	MAX.		
VLWY9930	Yellow	4000	8500	12 200	70	585	592	597	70	1.83	2.2	3.03	70	AlInGaP on Si

ABSOLUTE MAXIMUM RATINGS (T_{amb} = 25 °C, unless otherwise specified)
VLWY9930

PARAMETER	TEST CONDITION	SYMBOL	VALUE	UNIT
Reverse voltage [1]		V_R	10	V
DC forward current	$T_{amb} \leq 85$ °C	I_F	70	mA
Surge forward current	$t_p \leq 10$ µs	I_{FSM}	0.1	A
Power dissipation		P_V	212	mW
Junction temperature		T_j	125	°C
Operating temperature range		T_{amb}	-40 to +110	°C
Storage temperature range		T_{stg}	-40 to +110	°C
Soldering temperature	t ≤ 5 s, 1.5 mm from body preheat temperature 100 °C / 30 s	T_{sd}	260	°C
Thermal resistance junction to ambient	With anode heatsink of 70 mm^2	R_{thJA}	200	K/W
Thermal resistance junction to pin		R_{thJP}	90	K/W

Note

[1] Driving the LED in reverse direction is suitable for a short term application

For technical questions, contact: LED@vishay.com
THIS DOCUMENT IS SUBJECT TO CHANGE WITHOUT NOTICE. THE PRODUCTS DESCRIBED HEREIN AND THIS DOCUMENT ARE SUBJECT TO SPECIFIC DISCLAIMERS, SET FORTH AT www.vishay.com/doc?91000

OPTICAL AND ELECTRICAL CHARACTERISTICS (T_{amb} = 25 °C, unless otherwise specified)
VLWY9930, YELLOW

PARAMETER	TEST CONDITION	SYMBOL	MIN.	TYP.	MAX.	UNIT
Total flux	I_F = 70 mA, R_{thJA} = 200 K/W	ϕ_V	4000	8500	12 200	mlm
Luminous intensity/total flux	I_F = 70 mA, R_{thJA} = 200 K/W	I_V/ϕ_V	-	0.7	-	mcd/mlm
Dominant wavelength	I_F = 70 mA, R_{thJA} = 200 K/W	λ_d	585	592	597	nm
Peak wavelength	I_F = 70 mA, R_{thJA} = 200 K/W	λ_p	-	595	-	nm
Angle of half intensity	I_F = 70 mA, R_{thJA} = 200 K/W	φ	-	± 45	-	°
Total included angle	90 % of total flux captured	$\varphi_{0.9\ V}$	-	100	-	°
Forward voltage	I_F = 70 mA, R_{thJA} = 200 K/W	V_F	1.83	2.2	3.03	V
Reverse voltage		V_R	10	20	-	V
Temperature coefficient of λ_{dom}	I_F = 70 mA	$T_C\lambda_{dom}$	-	0.1	-	nm/K
Temperature coefficient of V_F	I_F = 70 mA, T > -25 °C	T_{CVF}	-	-2	-	mV/K

LUMINOUS FLUX CLASSIFICATION

GROUP	LUMINOUS FLUX (mlm)	
	MIN.	MAX.
H	4000	6100
I	5000	7300
K	6000	9700
L	7000	12 200

Note

- Luminous flux is tested at a current pulse duration of 25 ms and an accuracy of ± 11 %.
  The above type numbers represent the order groups which include only a few brightness groups. Only one group will be shipped on each tube (there will be no mixing of two groups on each tube).
  In order to ensure availability, single brightness groups will be not orderable.
  In a similar manner for colors where wavelength groups are measured and binned, single wavelength groups will be shipped in any one tube.
  In order to ensure availability, single wavelength groups will not be orderable

COLOR CLASSIFICATION

GROUP	DOMINANT WAVELENGTH (nm)	
	MIN.	MAX.
0	585	588
1	587	591
2	589	594
3	592	597

Note

- Wavelengths are tested at a current pulse duration of 25 ms and an accuracy of ± 1 nm

FORWARD VOLTAGE CLASSIFICATION

GROUP	FORWARD VOLTAGE (V)	
	MIN.	MAX.
Y	1.83	2.07
Z	1.95	2.19
0	2.07	2.31
1	2.19	2.43
2	2.31	2.55
3	2.43	2.67
4	2.55	2.79
5	2.67	2.91
6	2.79	3.03

Note

- Voltages are tested at a current pulse duration of 1 ms

MARKING EXAMPLE FOR SELECTION CODE ON LABEL

Selection code: K21

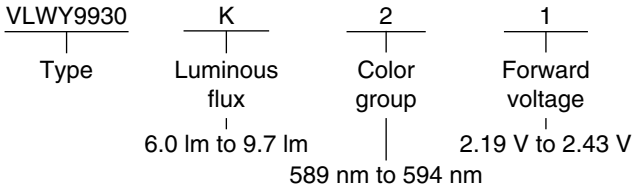

For technical questions, contact: LED@vishay.com
THIS DOCUMENT IS SUBJECT TO CHANGE WITHOUT NOTICE. THE PRODUCTS DESCRIBED HEREIN AND THIS DOCUMENT ARE SUBJECT TO SPECIFIC DISCLAIMERS, SET FORTH AT www.vishay.com/doc?91000

TYPICAL CHARACTERISTICS (T_{amb} = 25 °C, unless otherwise specified)

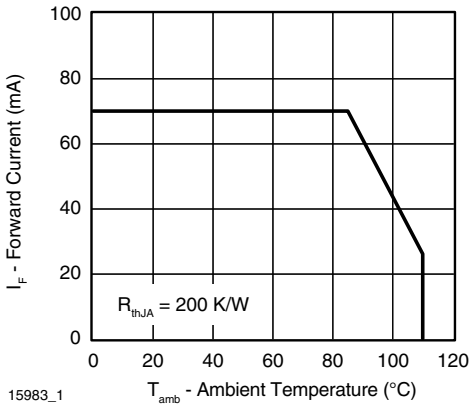

Fig. 1 - Forward Current vs. Ambient Temperature

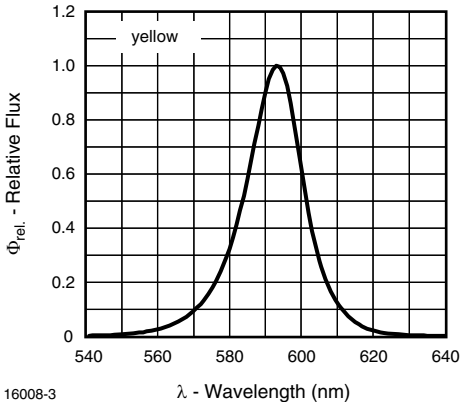

Fig. 4 - Relative Flux vs. Wavelength

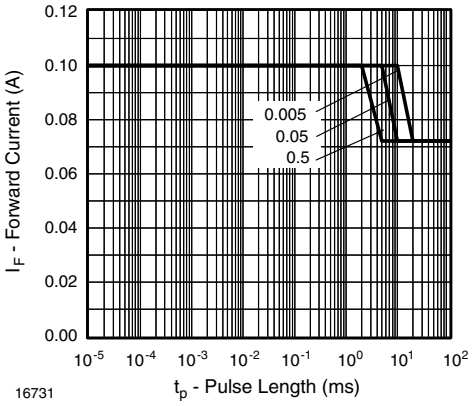

Fig. 2 - Forward Current vs. Pulse Length

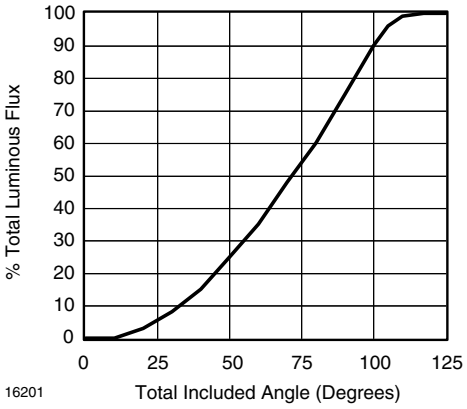

Fig. 5 - Percentage Total Luminous Flux vs. Total Included Angle for 90° Emission Angle

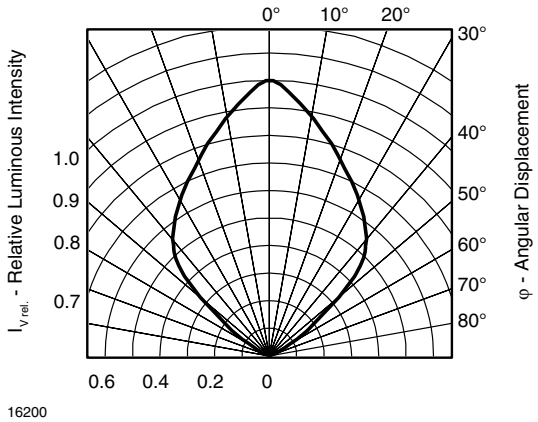

Fig. 3 - Relative Luminous Intensity vs. Angular Displacement

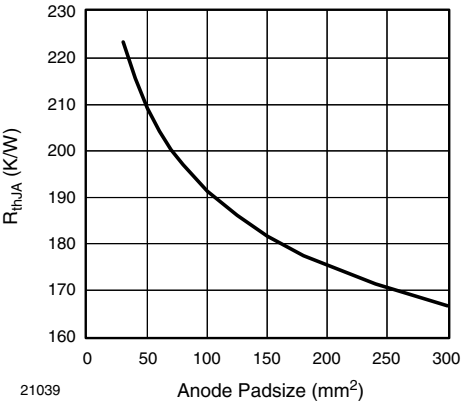

Fig. 6 - Thermal Resistance Junction Ambient vs. Anode Padsize

For technical questions, contact: LED@vishay.com
THIS DOCUMENT IS SUBJECT TO CHANGE WITHOUT NOTICE. THE PRODUCTS DESCRIBED HEREIN AND THIS DOCUMENT ARE SUBJECT TO SPECIFIC DISCLAIMERS, SET FORTH AT www.vishay.com/doc?91000

PACKAGE DIMENSIONS in millimeters

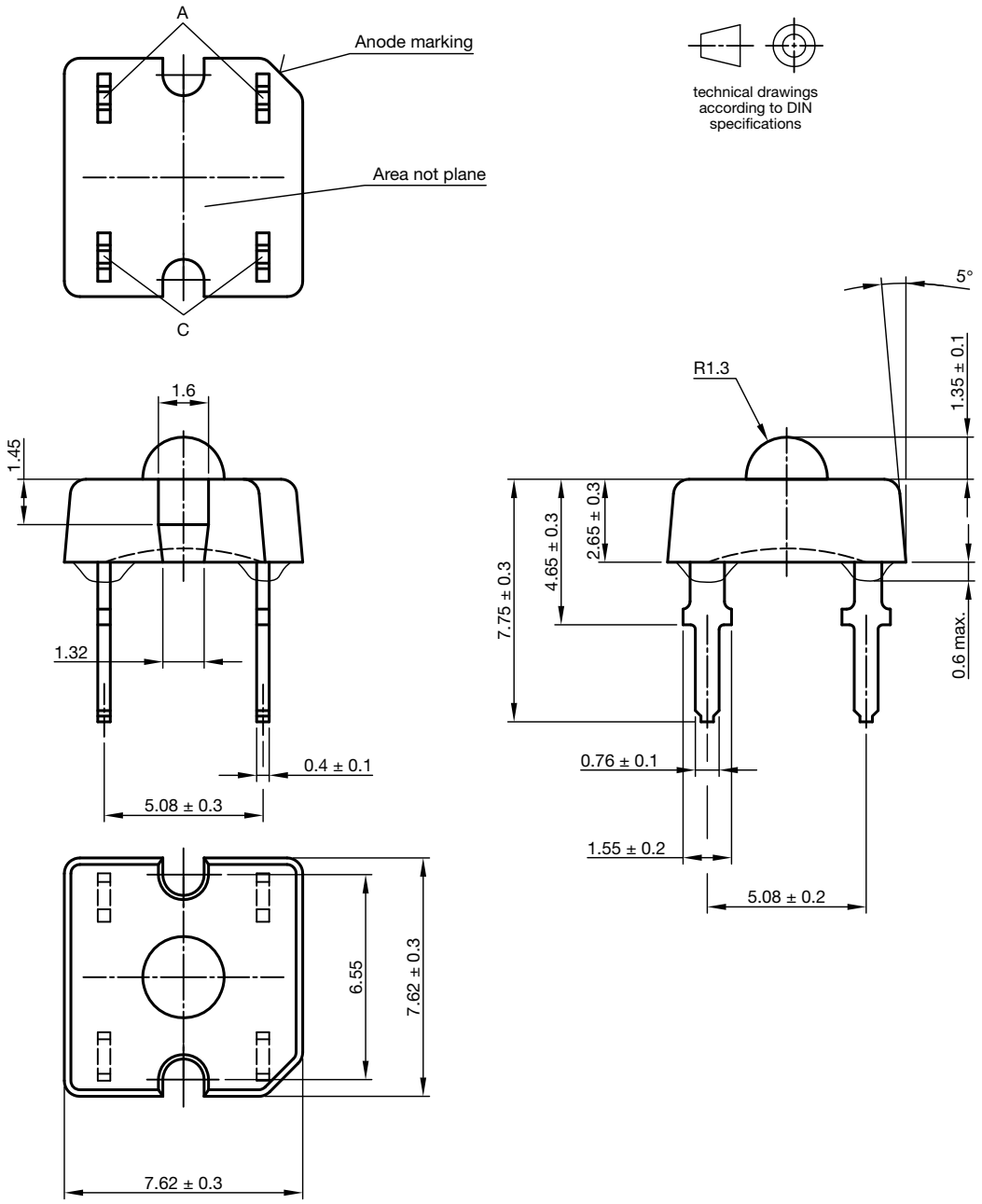

Drawing-No.: 6.544-5392.01-4
Issue: 3; 27.02.15

For technical questions, contact: LED@vishay.com
THIS DOCUMENT IS SUBJECT TO CHANGE WITHOUT NOTICE. THE PRODUCTS DESCRIBED HEREIN AND THIS DOCUMENT ARE SUBJECT TO SPECIFIC DISCLAIMERS, SET FORTH AT www.vishay.com/doc?91000

FAN FOLD BOX DIMENSIONS in millimeters

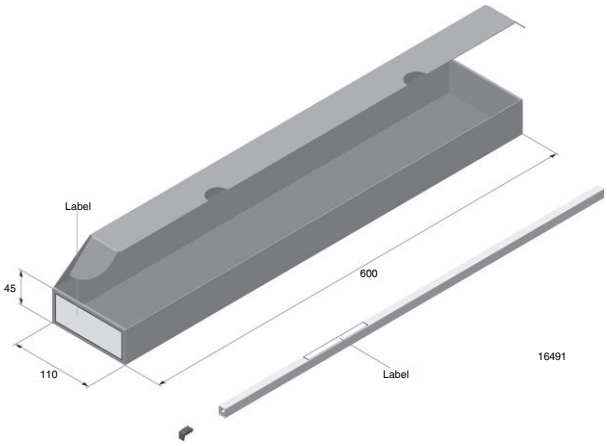

LABEL OF FAN FOLD BOX (example)

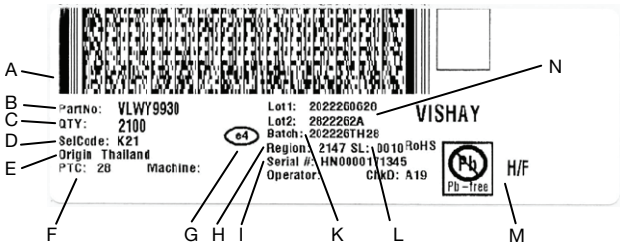

A. 2D barcode
B. Part No: Vishay part number
C. QTY: quantity
D. SelCode: selection bin code
E. Country of origin
F. PTC: production plant code
G. Termination finish
H. Region code
I. Serial#: serial number
K. Batch number: year, week, country code, plant code
L. SL: storage location
M. Environmental symbols: RoHS, lead (Pb)-free, halogen-free
N. Lot numbers

EXAMPLE FOR TELUX TUBE LABEL DIMENSIONS in millimeters

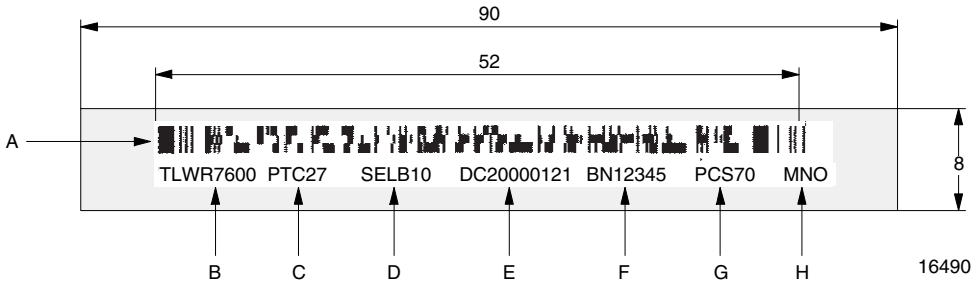

A. Bar code
B. Type of component
C. Manufacturing plant
D. SEL - selection code (bin):
digit 1 - code for luminous flux group
digit 2 - code for dominant wavelength group
digit 3 - code for forward voltage group
E. Date code
F. Batch: no.
G. Total quantity
H. Company code

THIS DOCUMENT IS SUBJECT TO CHANGE WITHOUT NOTICE. THE PRODUCTS DESCRIBED HEREIN AND THIS DOCUMENT ARE SUBJECT TO SPECIFIC DISCLAIMERS, SET FORTH AT www.vishay.com/doc?91000

TUBE WITH BAR CODE LABEL DIMENSIONS in millimeters

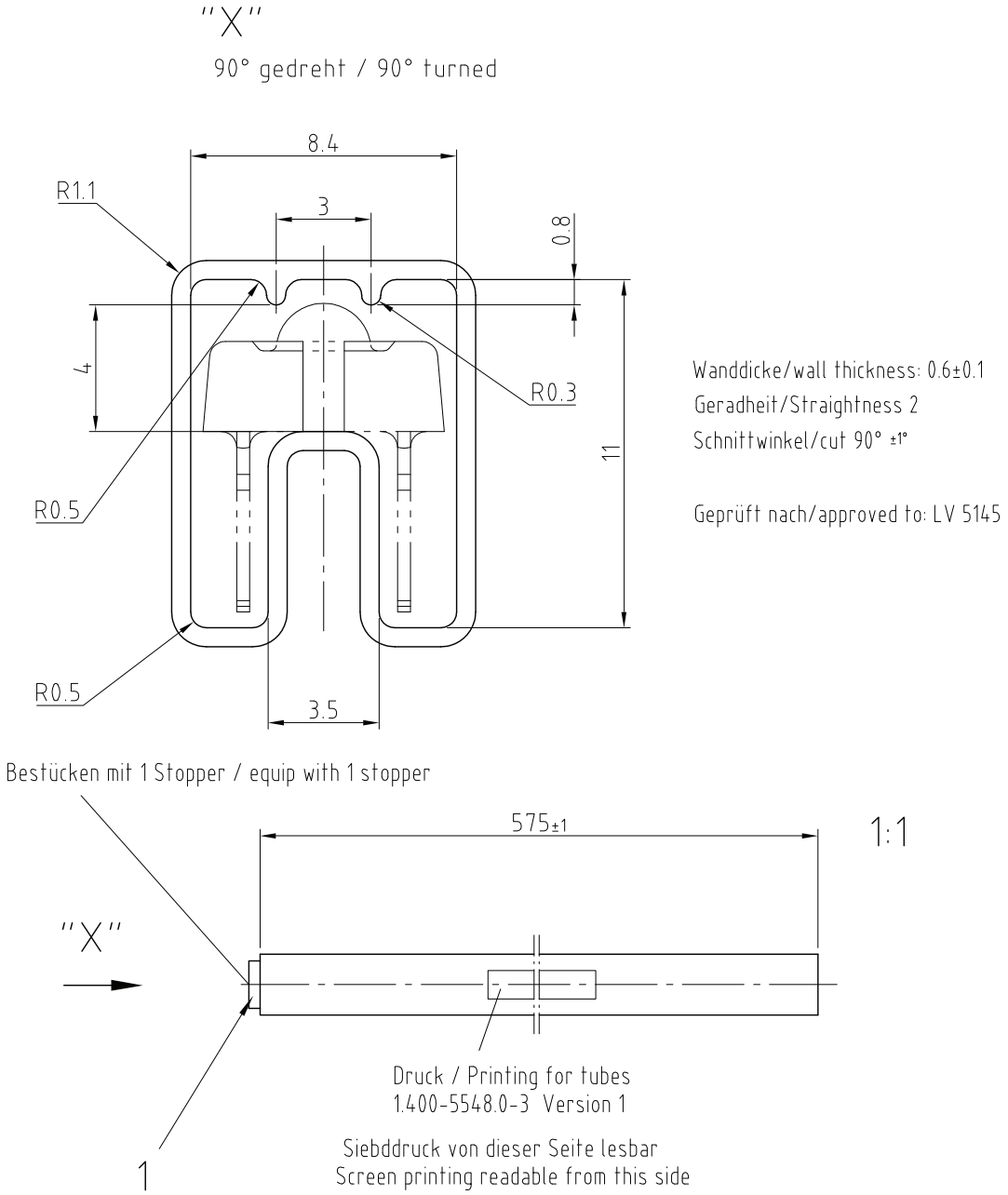

Drawing-No.: 9.700-5223.0-4
Rev. 2; Date: 23.08.99
20438

Drawing Proportions not Scaled

For technical questions, contact: LED@vishay.com
THIS DOCUMENT IS SUBJECT TO CHANGE WITHOUT NOTICE. THE PRODUCTS DESCRIBED HEREIN AND THIS DOCUMENT ARE SUBJECT TO SPECIFIC DISCLAIMERS, SET FORTH AT www.vishay.com/doc?91000

Disclaimer

ALL PRODUCT, PRODUCT SPECIFICATIONS AND DATA ARE SUBJECT TO CHANGE WITHOUT NOTICE TO IMPROVE RELIABILITY, FUNCTION OR DESIGN OR OTHERWISE.

Vishay Intertechnology, Inc., its affiliates, agents, and employees, and all persons acting on its or their behalf (collectively, “Vishay”), disclaim any and all liability for any errors, inaccuracies or incompleteness contained in any datasheet or in any other disclosure relating to any product.

Vishay makes no warranty, representation or guarantee regarding the suitability of the products for any particular purpose or the continuing production of any product. To the maximum extent permitted by applicable law, Vishay disclaims (i) any and all liability arising out of the application or use of any product, (ii) any and all liability, including without limitation special, consequential or incidental damages, and (iii) any and all implied warranties, including warranties of fitness for particular purpose, non-infringement and merchantability.

Statements regarding the suitability of products for certain types of applications are based on Vishay's knowledge of typical requirements that are often placed on Vishay products in generic applications. Such statements are not binding statements about the suitability of products for a particular application. It is the customer's responsibility to validate that a particular product with the properties described in the product specification is suitable for use in a particular application. Parameters provided in datasheets and / or specifications may vary in different applications and performance may vary over time. All operating parameters, including typical parameters, must be validated for each customer application by the customer's technical experts. Product specifications do not expand or otherwise modify Vishay's terms and conditions of purchase, including but not limited to the warranty expressed therein.

Hyperlinks included in this datasheet may direct users to third-party websites. These links are provided as a convenience and for informational purposes only. Inclusion of these hyperlinks does not constitute an endorsement or an approval by Vishay of any of the products, services or opinions of the corporation, organization or individual associated with the third-party website. Vishay disclaims any and all liability and bears no responsibility for the accuracy, legality or content of the third-party website or for that of subsequent links.

Except as expressly indicated in writing, Vishay products are not designed for use in medical, life-saving, or life-sustaining applications or for any other application in which the failure of the Vishay product could result in personal injury or death. Customers using or selling Vishay products not expressly indicated for use in such applications do so at their own risk. Please contact authorized Vishay personnel to obtain written terms and conditions regarding products designed for such applications.

No license, express or implied, by estoppel or otherwise, to any intellectual property rights is granted by this document or by any conduct of Vishay. Product names and markings noted herein may be trademarks of their respective owners.

© 2023 VISHAY INTERTECHNOLOGY, INC. ALL RIGHTS RESERVED