Silicon NPN Phototransistor

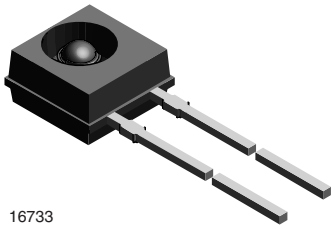

16733

FEATURES

- Package type: leaded
- Package form: side view lens
- Dimensions (L x W x H in mm): 5 x 2.65 x 5
- High radiant sensitivity
- Daylight blocking filter matched with 940 nm emitters
- Fast response times
- Angle of half sensitivity: φ = ± 37°
- Package matched with IR emitter series TSKS5400S
- Compliant to RoHS Directive 2002/95/EC and in accordance to WEEE 2002/96/EC

Pb-free
e3
RoHS COMPLIANT
GREEN (5-2008)**

Note

** Please see document "Vishay Material Category Policy": www.vishay.com/doc?99902

DESCRIPTION

TEKT5400S is a silicon NPN phototransistor with high radiant sensitivity, molded in a plastic package with side view lens and daylight blocking filter. Filter bandwidth is matched with 950 nm IR emitters.

APPLICATIONS

- Detector in electronic control and drive circuits

PRODUCT SUMMARY

COMPONENT	I_{ca} (mA)	φ (deg)	$\lambda_{0.5}$ (nm)
TEKT5400S	4	± 37	850 to 980

Note

- Test condition see table "Basic Characteristics"

ORDERING INFORMATION

ORDERING CODE	PACKAGING	REMARKS	PACKAGE FORM
TEKT5400S	Bulk	MOQ: 2000 pcs, 2000 pcs/bulk	Side view lens

Note

- MOQ: minimum order quantity

ABSOLUTE MAXIMUM RATINGS (T_{amb} = 25 °C, unless otherwise specified)

PARAMETER	TEST CONDITION	SYMBOL	VALUE	UNIT
Collector emitter voltage		V_{CEO}	70	V
Emitter collector voltage		V_{ECO}	7	V
Collector current		I_C	100	mA
Collector peak current	$t_p/T \leq 0.5$, $t_p \leq 10$ ms	I_{CM}	200	mA
Power dissipation	$T_{amb} \leq 40$ °C	P_V	150	mW
Junction temperature		T_j	100	°C
Operating temperature range		T_{amb}	- 40 to + 85	°C
Storage temperature range		T_{stg}	- 40 to + 100	°C
Soldering temperature	t ≤ 5 s	T_{sd}	260	°C
Thermal resistance junction/ambient	J-STD-051, soldered on PCB	R_{thJA}	270	K/W

For technical questions, contact: detectortechsupport@vishay.com
THIS DOCUMENT IS SUBJECT TO CHANGE WITHOUT NOTICE. THE PRODUCTS DESCRIBED HEREIN AND THIS DOCUMENT ARE SUBJECT TO SPECIFIC DISCLAIMERS, SET FORTH AT www.vishay.com/doc?91000

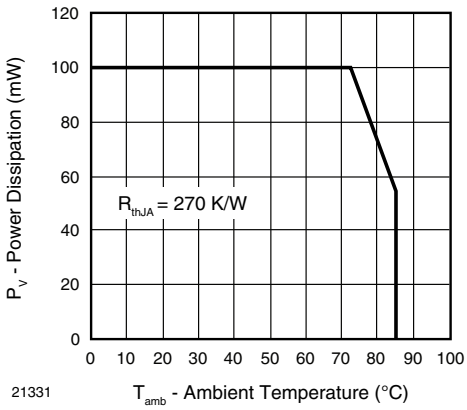

Fig. 1 - Power Dissipation Limit vs. Ambient Temperature

BASIC CHARACTERISTICS (T_{amb} = 25 °C, unless otherwise specified)						
PARAMETER	**TEST CONDITION**	**SYMBOL**	**MIN.**	**TYP.**	**MAX.**	**UNIT**
Collector emitter voltage	I_C = 1 mA	V_{CEO}	70			V
Emitter collector voltage	I_E = 100 µA	V_{ECO}	7			V
Collector dark current	V_{CE} = 20 V, E = 0	I_{CEO}		1	100	nA
Collector emitter capacitance	V_{CE} = 5 V, f = 1 MHz, E = 0	C_{CEO}		6		pF
Collector ligth current	E_e = 1 mW/cm², λ = 950 nm, V_{CE} = 5 V	I_{ca}	2	4		mA
Angle of half sensitivity		φ		± 37		deg
Wavelength of peak sensitivity		λ_p		920		nm
Range of spectral bandwidth		$\lambda_{0.5}$		850 to 980		nm
Collector emitter saturation voltage	E_e = 1 mW/cm², λ = 950 nm, I_C = 0.1 mA	V_{CEsat}			0.3	V
Turn-on time	V_S = 5 V, I_C = 5 mA, R_L = 100 Ω	t_{on}		6		µs
Turn-off time	V_S = 5 V, I_C = 5 mA, R_L = 100 Ω	t_{off}		5		µs
Cut-off frequency	V_S = 5 V, I_C = 5 mA, R_L = 100 Ω	f_c		110		kHz

BASIC CHARACTERISTICS (T_{amb} = 25 °C, unless otherwise specified)

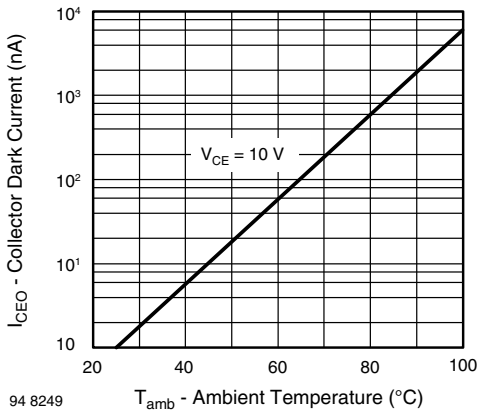

Fig. 1 - Collector Dark Current vs. Ambient Temperature

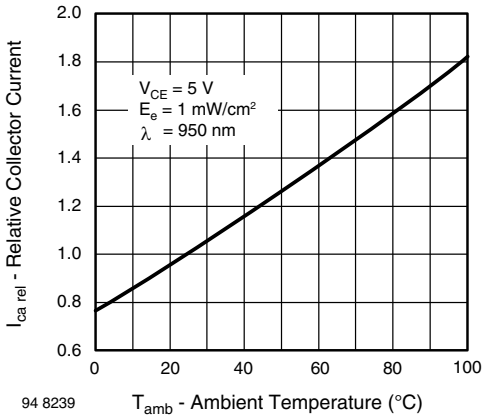

Fig. 2 - Relative Collector Current vs. Ambient Temperature

For technical questions, contact: detectortechsupport@vishay.com
THIS DOCUMENT IS SUBJECT TO CHANGE WITHOUT NOTICE. THE PRODUCTS DESCRIBED HEREIN AND THIS DOCUMENT ARE SUBJECT TO SPECIFIC DISCLAIMERS, SET FORTH AT www.vishay.com/doc?91000

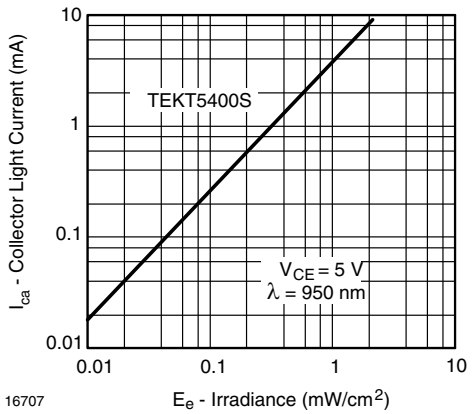

Fig. 3 - Collector Light Current vs. Irradiance

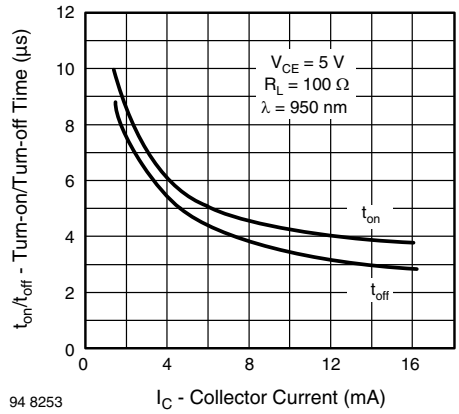

Fig. 6 - Turn-on/Turn-off Time vs. Collector Current

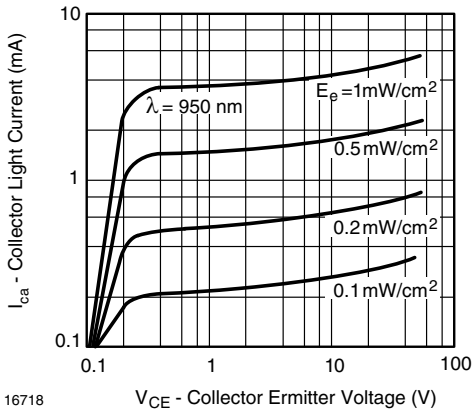

Fig. 4 - Collector Light Current vs. Collector Emitter Voltage

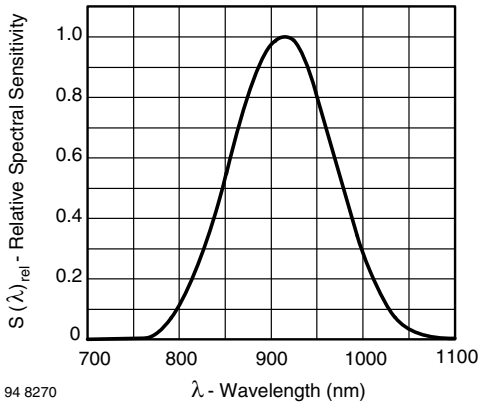

Fig. 7 - Relative Spectral Sensitivity vs. Wavelength

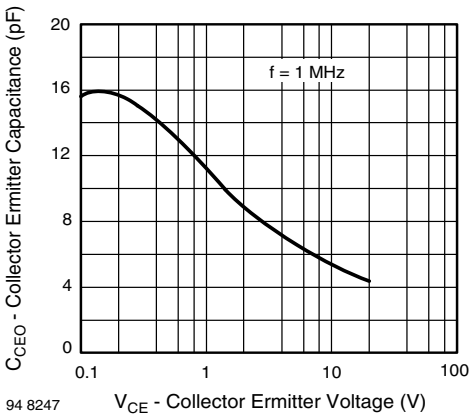

Fig. 5 - Collector Emitter Capacitance vs. Collector Emitter Voltage

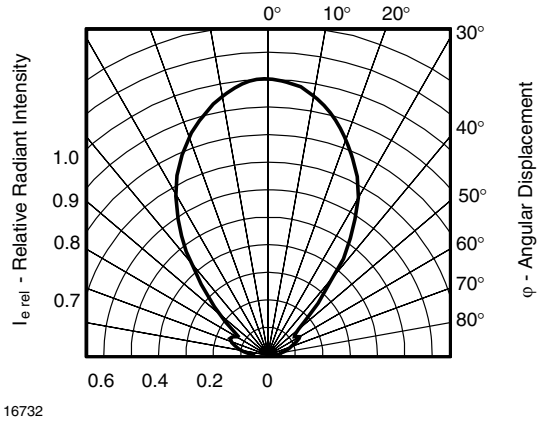

Fig. 8 - Relative Radiant Intensity vs. Angular Displacement

For technical questions, contact: detectortechsupport@vishay.com
THIS DOCUMENT IS SUBJECT TO CHANGE WITHOUT NOTICE. THE PRODUCTS DESCRIBED HEREIN AND THIS DOCUMENT ARE SUBJECT TO SPECIFIC DISCLAIMERS, SET FORTH AT www.vishay.com/doc?91000

PACKAGE DIMENSIONS in millimeters

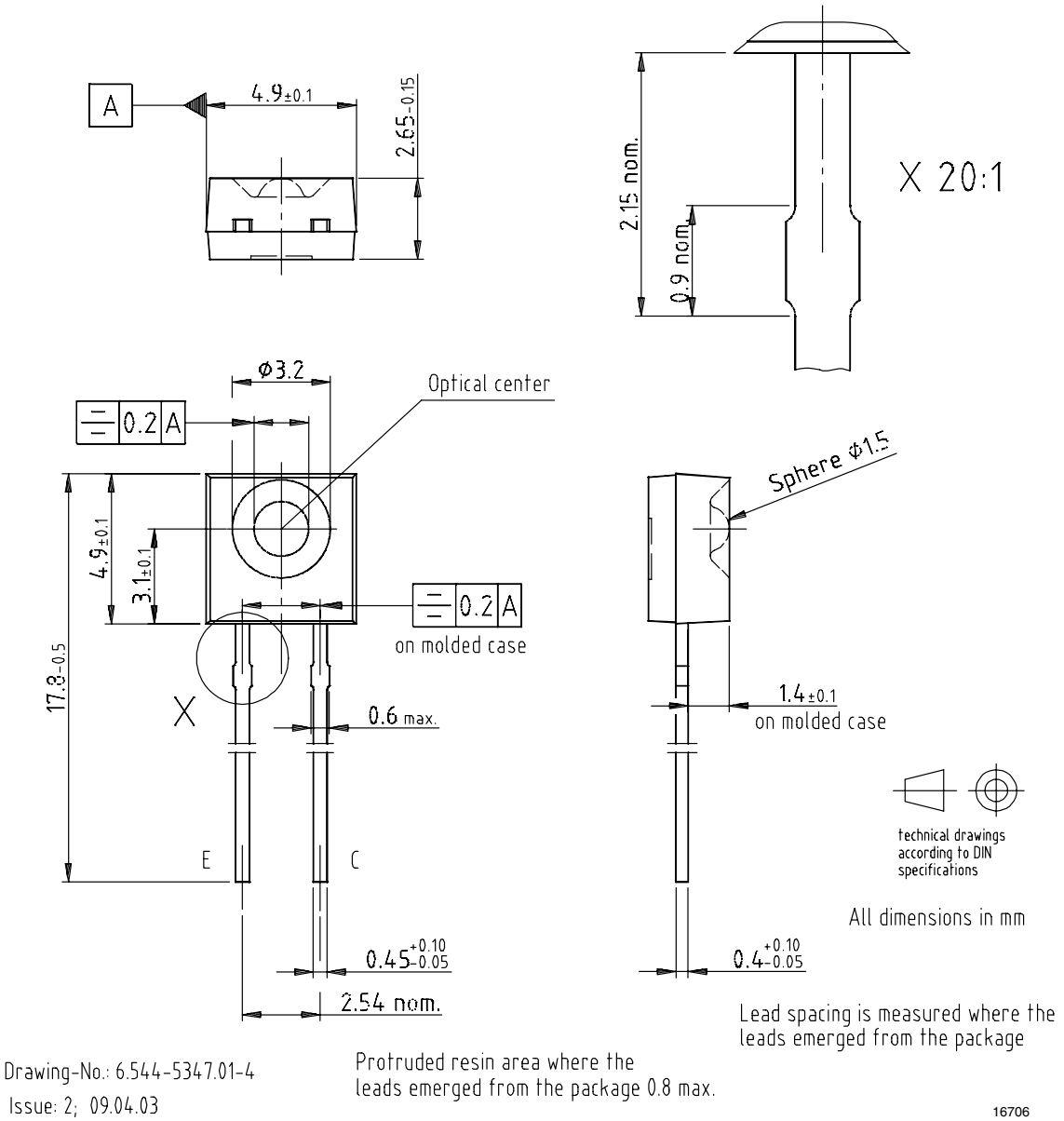

For technical questions, contact: detectortechsupport@vishay.com
THIS DOCUMENT IS SUBJECT TO CHANGE WITHOUT NOTICE. THE PRODUCTS DESCRIBED HEREIN AND THIS DOCUMENT ARE SUBJECT TO SPECIFIC DISCLAIMERS, SET FORTH AT www.vishay.com/doc?91000

TAPE AND AMMOPACK STANDARDS Dimensions in millimeters

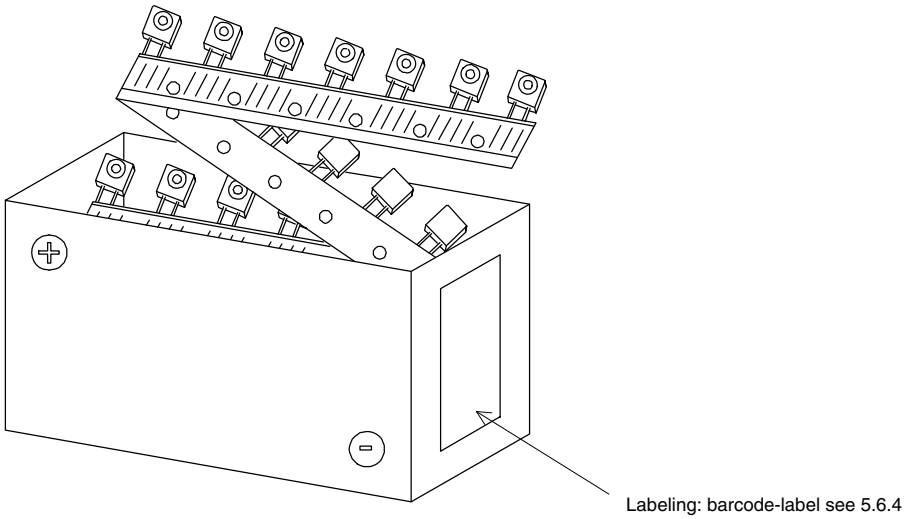

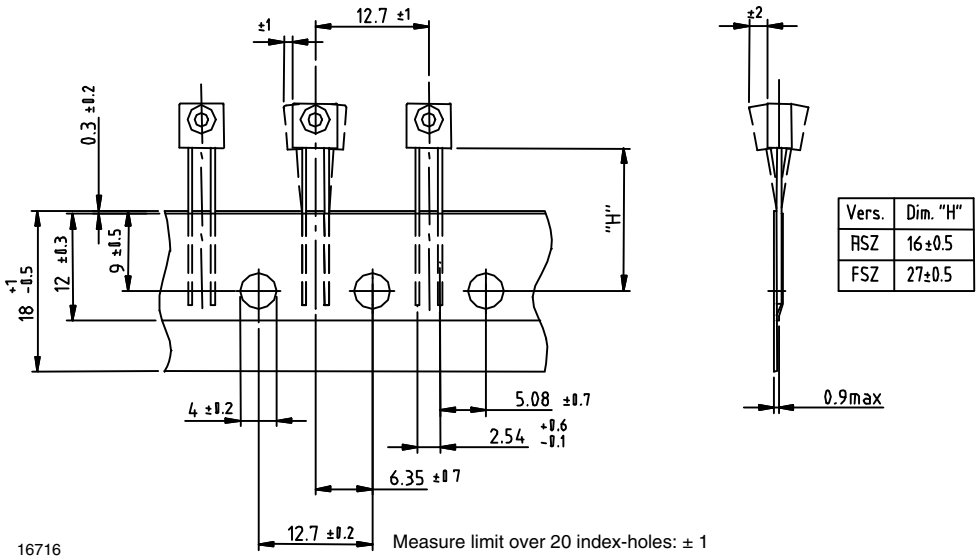

Vers.	Dim. "H"
RSZ	16±0.5
FSZ	27±0.5

For technical questions, contact: detectortechsupport@vishay.com
THIS DOCUMENT IS SUBJECT TO CHANGE WITHOUT NOTICE. THE PRODUCTS DESCRIBED HEREIN AND THIS DOCUMENT ARE SUBJECT TO SPECIFIC DISCLAIMERS, SET FORTH AT www.vishay.com/doc?91000

Disclaimer

ALL PRODUCT, PRODUCT SPECIFICATIONS AND DATA ARE SUBJECT TO CHANGE WITHOUT NOTICE TO IMPROVE RELIABILITY, FUNCTION OR DESIGN OR OTHERWISE.

Vishay Intertechnology, Inc., its affiliates, agents, and employees, and all persons acting on its or their behalf (collectively, “Vishay”), disclaim any and all liability for any errors, inaccuracies or incompleteness contained in any datasheet or in any other disclosure relating to any product.

Vishay makes no warranty, representation or guarantee regarding the suitability of the products for any particular purpose or the continuing production of any product. To the maximum extent permitted by applicable law, Vishay disclaims (i) any and all liability arising out of the application or use of any product, (ii) any and all liability, including without limitation special, consequential or incidental damages, and (iii) any and all implied warranties, including warranties of fitness for particular purpose, non-infringement and merchantability.

Statements regarding the suitability of products for certain types of applications are based on Vishay's knowledge of typical requirements that are often placed on Vishay products in generic applications. Such statements are not binding statements about the suitability of products for a particular application. It is the customer's responsibility to validate that a particular product with the properties described in the product specification is suitable for use in a particular application. Parameters provided in datasheets and / or specifications may vary in different applications and performance may vary over time. All operating parameters, including typical parameters, must be validated for each customer application by the customer's technical experts. Product specifications do not expand or otherwise modify Vishay's terms and conditions of purchase, including but not limited to the warranty expressed therein.

Hyperlinks included in this datasheet may direct users to third-party websites. These links are provided as a convenience and for informational purposes only. Inclusion of these hyperlinks does not constitute an endorsement or an approval by Vishay of any of the products, services or opinions of the corporation, organization or individual associated with the third-party website. Vishay disclaims any and all liability and bears no responsibility for the accuracy, legality or content of the third-party website or for that of subsequent links.

Except as expressly indicated in writing, Vishay products are not designed for use in medical, life-saving, or life-sustaining applications or for any other application in which the failure of the Vishay product could result in personal injury or death. Customers using or selling Vishay products not expressly indicated for use in such applications do so at their own risk. Please contact authorized Vishay personnel to obtain written terms and conditions regarding products designed for such applications.

No license, express or implied, by estoppel or otherwise, to any intellectual property rights is granted by this document or by any conduct of Vishay. Product names and markings noted herein may be trademarks of their respective owners.

© 2023 VISHAY INTERTECHNOLOGY, INC. ALL RIGHTS RESERVED