Transmissive Optical Sensor with Phototransistor Output

19180_4

Top view

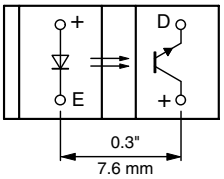

19180_3

FEATURES

- Package type: leaded
- Detector type: phototransistor
- Dimensions (L x W x H in mm): 24.5 x 6.3 x 10.8
- Gap (in mm): 3.1
- Typical output current under test: I_C = 4 mA (TCST2103)
- Typical output current under test: I_C = 2 mA (TCST2202)
- Typical output current under test: I_C = 0.5 mA (TCST2300)
- Daylight blocking filter
- Emitter wavelength: 950 nm
- Lead (Pb)-free soldering released
- Compliant to RoHS directive 2002/95/EC and in accordance to WEEE 2002/96/EC

Pb-free

e4

RoHS COMPLIANT

DESCRIPTION

The TCST2103, TCST2202, and TCST2300 are transmissive sensors that include an infrared emitter and phototransistor, located face-to-face on the optical axes in a leaded package which blocks visible light. These part numbers include options for aperture width.

APPLICATIONS

- Optical switch
- Photo interrupter
- Counter
- Encoder

PRODUCT SUMMARY

PART NUMBER	GAP WIDTH (mm)	APERTURE WIDTH (mm)	TYPICAL OUTPUT CURRENT UNDER TEST [1] (mA)	DAYLIGHT BLOCKING FILTER INTEGRATED
TCST2103	3.1	1	4	Yes
TCST2202	3.1	0.5	2	Yes
TCST2300	3.1	0.25	0.5	Yes

Note

[1] Conditions like in table basic characteristics/coupler

ORDERING INFORMATION

ORDERING CODE	PACKAGING	VOLUME [1]	REMARKS
TCST2103	Tube	MOQ: 1020 pcs, 85 pcs/tube	With mounting flange
TCST2202	Tube	MOQ: 1020 pcs, 85 pcs/tube	With mounting flange
TCST2300	Tube	MOQ: 1020 pcs, 85 pcs/tube	With mounting flange

Note

[1] MOQ: minimum order quantity

ABSOLUTE MAXIMUM RATINGS [1]

PARAMETER	TEST CONDITION	SYMBOL	VALUE	UNIT
COUPLER				
Total power dissipation	$T_{amb} \leq 25$ °C	P_{tot}	250	mW
Ambient temperature range		T_{amb}	- 55 to + 85	°C
Storage temperature range		T_{stg}	- 55 to + 100	°C
Soldering temperature	Distance to package: 2 mm; $t \leq 5$ s	T_{sd}	260	°C

ABSOLUTE MAXIMUM RATINGS (1)				
PARAMETER	TEST CONDITION	SYMBOL	VALUE	UNIT
INPUT (EMITTER)				
Reverse voltage		V_R	6	V
Forward current		I_F	60	mA
Forward surge current	$t_p \leq 10$ µs	I_{FSM}	3	A
Power dissipation	$T_{amb} \leq 25$ °C	P_V	100	mW
Junction temperature		T_j	100	°C
OUTPUT (DETECTOR)				
Collector emitter voltage		V_{CEO}	70	V
Emitter collector voltage		V_{ECO}	7	V
Collector peak current	$t_p/T = 0.5$, $t_p \leq 10$ ms	I_{CM}	200	mA
Power dissipation	$T_{amb} \leq 25$ °C	P_V	150	mW
Junction temperature		T_j	100	°C

Note

(1) $T_{amb} = 25$ °C, unless otherwise specified

ABSOLUTE MAXIMUM RATINGS

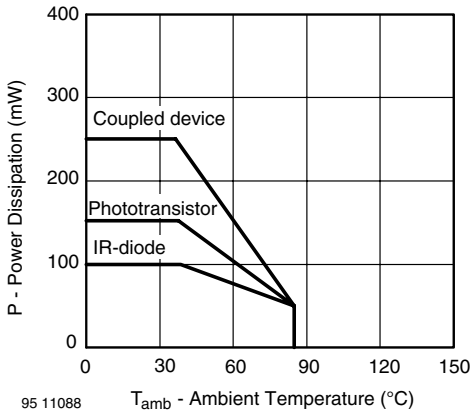

Fig. 1 - Power Dissipation Limit vs. Ambient Temperature

BASIC CHARACTERISTICS (1)							
PARAMETER	TEST CONDITION	PART	SYMBOL	MIN.	TYP.	MAX.	UNIT
COUPLER							
Current transfer ratio	$V_{CE} = 5$ V, $I_F = 20$ mA	TCST2103	CTR	10	20		%
		TCST2202	CTR	5	10		%
		TCST2300	CTR	1.25	2.5		%
Collector current	$V_{CE} = 5$ V, $I_F = 20$ mA	TCST2103	I_C	2	4		mA
		TCST2202	I_C	1	2		mA
		TCST2300	I_C	0.25	0.5		mA
Collector emitter saturation voltage	$I_F = 20$ mA, $I_C = 1$ mA	TCST2103	V_{CEsat}			0.4	V
	$I_F = 20$ mA, $I_C = 0.5$ mA	TCST2202	V_{CEsat}			0.4	V
	$I_F = 20$ mA, $I_C = 0.1$ mA	TCST2300	V_{CEsat}			0.4	V
Resolution, path of the shutter crossing the radiant sensitive zone	$I_{Crel} = 10$ % to 90 %	TCST2103	s		0.6		mm
		TCST2202	s		0.4		mm
		TCST2300	s		0.2		mm

BASIC CHARACTERISTICS (1)							
PARAMETER	TEST CONDITION	PART	SYMBOL	MIN.	TYP.	MAX.	UNIT
INPUT (EMITTER)							
Forward voltage	I_F = 60 mA		V_F		1.25	1.6	V
Junction capacitance	V_R = 0 V, f = 1 MHz		C_j		50		pF
OUTPUT (DETECTOR)							
Collector emitter voltage	I_C = 1 mA		V_{CEO}	70			V
Emitter collector voltage	I_E = 10 µA		V_{ECO}	7			V
Collector dark current	V_{CE} = 25 V, I_F = 0 A, E = 0 lx		I_{CEO}			100	nA
SWITCHING CHARACTERISTICS							
Turn-on time	I_C = 2 mA, V_S = 5 V, R_L = 100 Ω (see figure 2)		t_{on}		10		µs
Turn-off time	I_C = 2 mA, V_S = 5 V, R_L = 100 Ω (see figure 2)		t_{off}		8		µs

Note

(1) T_{amb} = 25 °C, unless otherwise specified

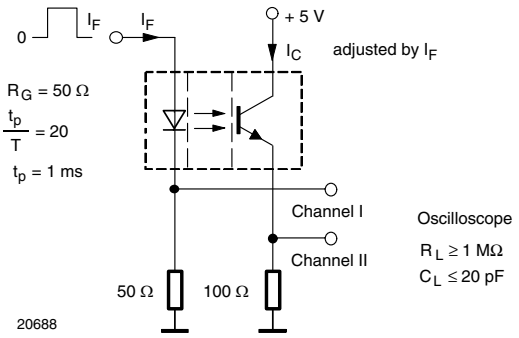

Fig. 2 - Test Circuit for t_{on} and t_{off}

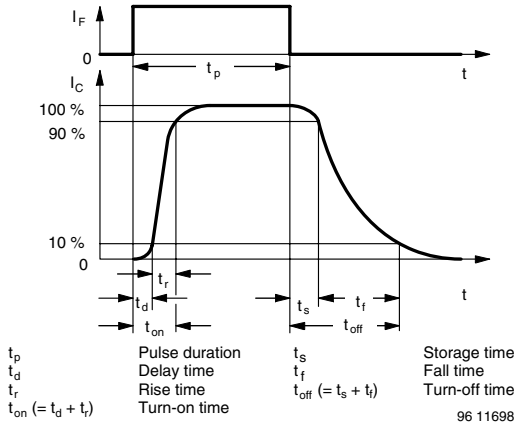

Fig. 3 - Switching Times

BASIC CHARACTERISTICS

T_{amb} = 25 °C, unless otherwise specified

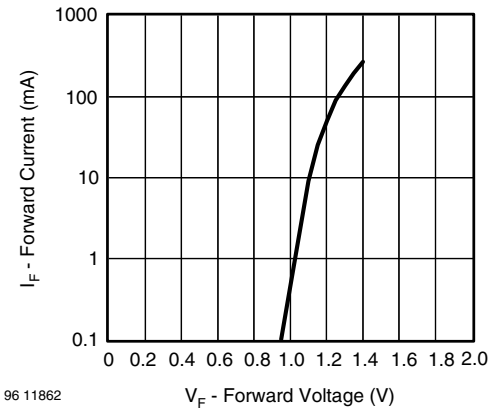

Fig. 4 - Forward Current vs. Forward Voltage

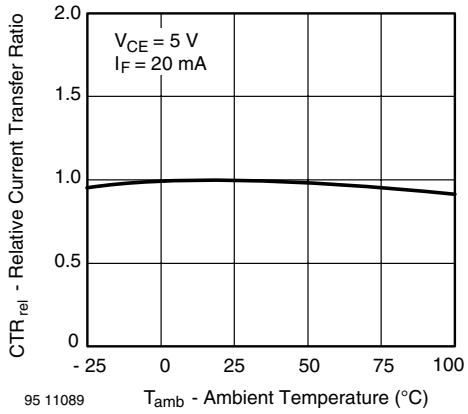

Fig. 5 - Relative Current Transfer Ratio vs. Ambient Temperature

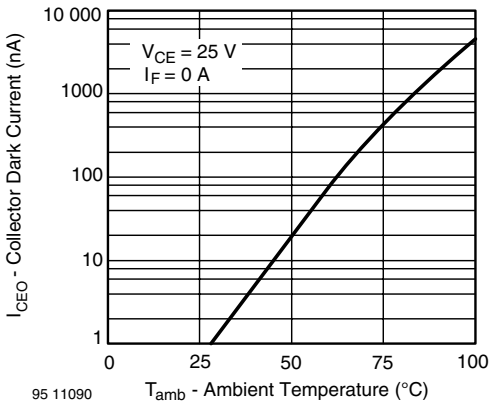

Fig. 6 - Collector Dark Current vs. Ambient Temperature

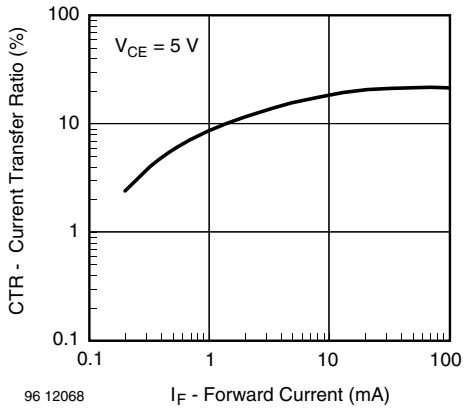

Fig. 9 - Current Transfer Ratio vs. Forward Current

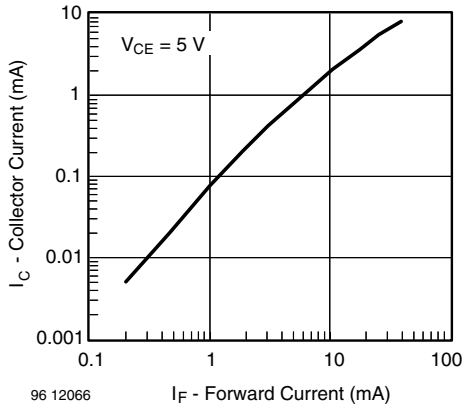

Fig. 7 - Collector Current vs. Forward Current

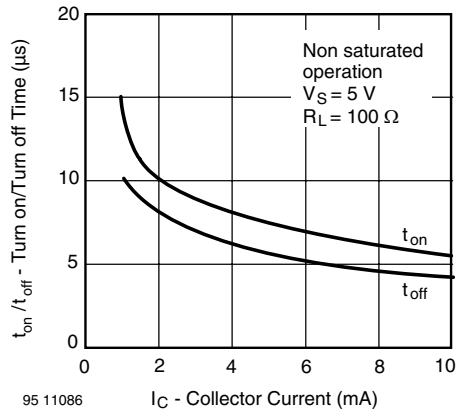

Fig. 10 - Turn-off/Turn-on Time vs. Collector Current

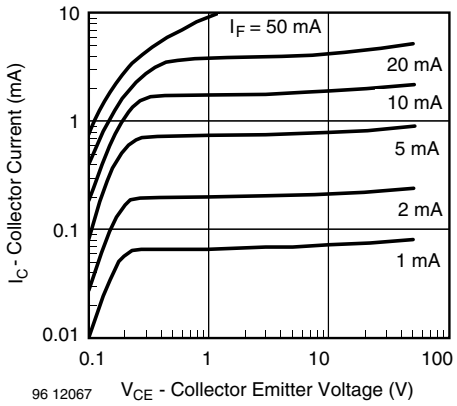

Fig. 8 - Collector Current vs. Collector Emitter Voltage

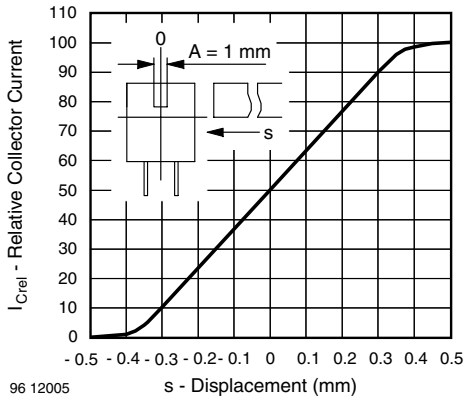

Fig. 11 - Relative Collector Current vs. Displacement

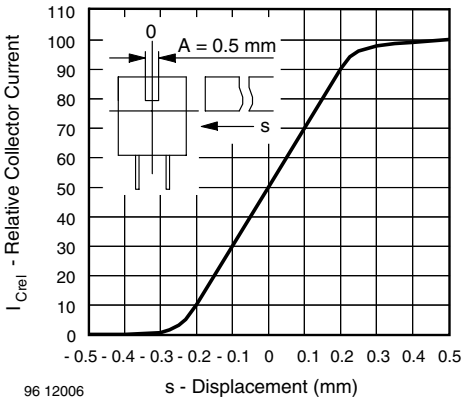

Fig. 12 - Relative Collector Current vs. Displacement

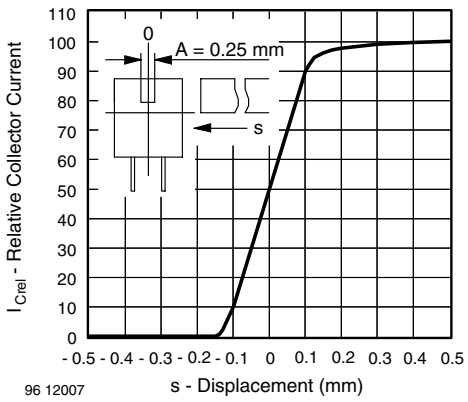

Fig. 13 - Relative Collector Current vs. Displacement

PACKAGE DIMENSIONS in millimeters

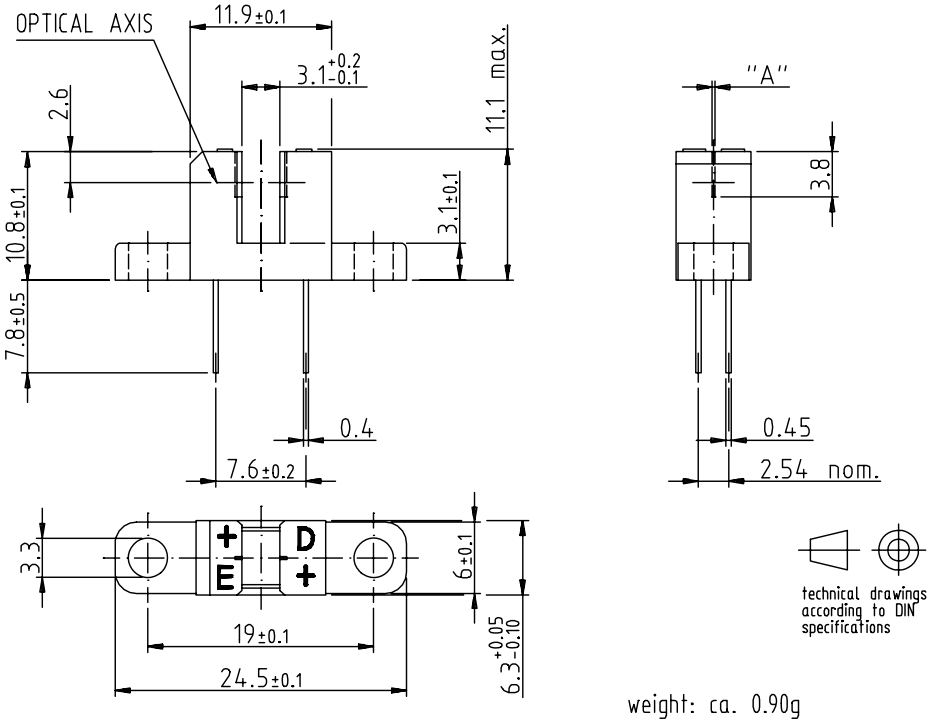

Drawing-No.: 6.550-5040.01-4
Issue: 2; 10.11.98
96 12095

TUBE DIMENSIONS in millimeters

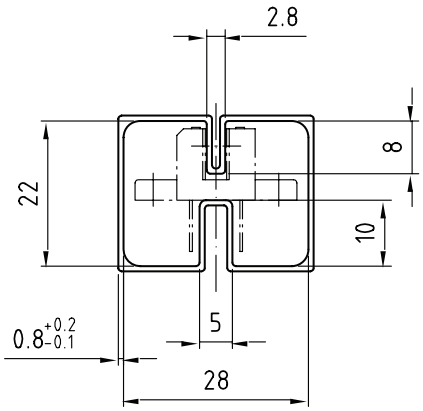

With rubber stopper
Tolerance: ±0.5mm
Length: 575±1mm

Drawing-No.: 9.700-5100.01-4
Issue: 1; 25.02.00
20252

Packaging and Ordering Information

PART NUMBER	MOQ [1]	PCS PER TUBE	TUBE SPEC. (FIGURE)	CONSTITUENTS (FORMS)
CNY70	4000	80	1	28
TCPT1300X01	2000	Reel	[2]	29
TCRT1000	1000	Bulk	-	26
TCRT1010	1000	Bulk	-	26
TCRT5000	4500	50	2	27
TCRT5000L	2400	48	3	27
TCST1030	5200	65	5	24
TCST1030L	2600	65	6	24
TCST1103	1020	85	4	24
TCST1202	1020	85	4	24
TCST1230	4800	60	7	24
TCST1300	1020	85	4	24
TCST2103	1020	85	4	24
TCST2202	1020	85	4	24
TCST2300	1020	85	4	24
TCST5250	4860	30	8	24
TCUT1300X01	2000	Reel	[2]	29
TCZT8020-PAER	2500	Bulk	-	22

Notes

[1] MOQ: minimum order quantity

[2] Please refer to datasheets

TUBE SPECIFICATION FIGURES

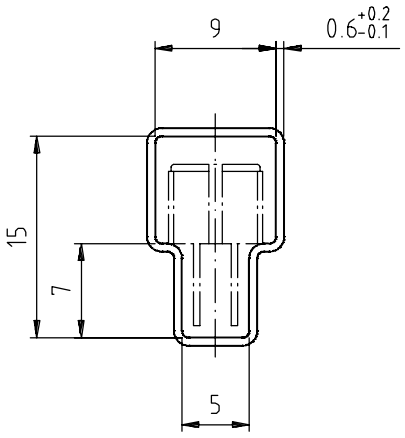

With rubber stopper
Tolerance: ±0.5mm
Length: 575±1mm

Drawing-No.: 9.700-5097.01-4
Issue: 1; 25.02.00

15198

Fig. 1

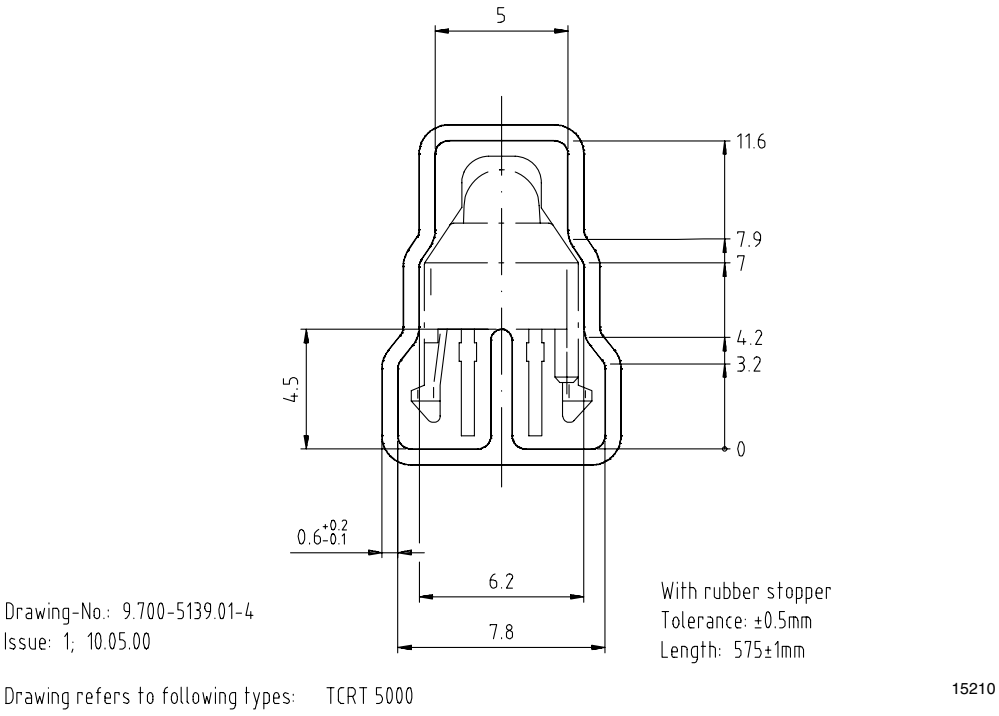
5
11.6
7.9
7
4.2
3.2
4.5
0
0.6-0.1 +0.2
6.2
7.8
Drawing-No.: 9.700-5139.01-4
Issue: 1; 10.05.00
With rubber stopper
Tolerance: ±0.5mm
Length: 575±1mm
Drawing refers to following types: TCRT 5000
15210

Fig. 2

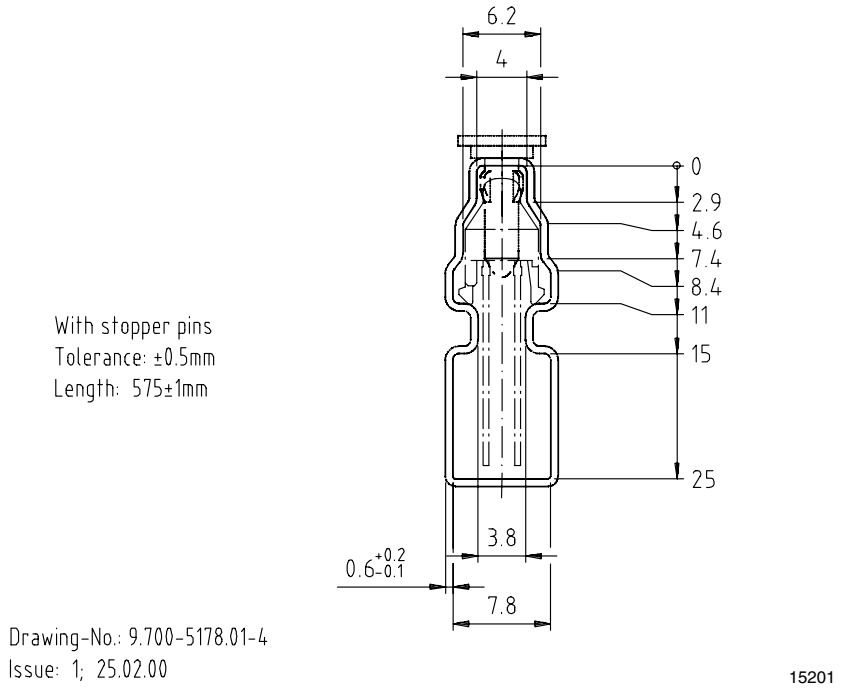
6.2
4
0
2.9
4.6
7.4
8.4
11
15
25
With stopper pins
Tolerance: ±0.5mm
Length: 575±1mm
3.8
0.6-0.1 +0.2
7.8
Drawing-No.: 9.700-5178.01-4
Issue: 1; 25.02.00
15201

Fig. 3

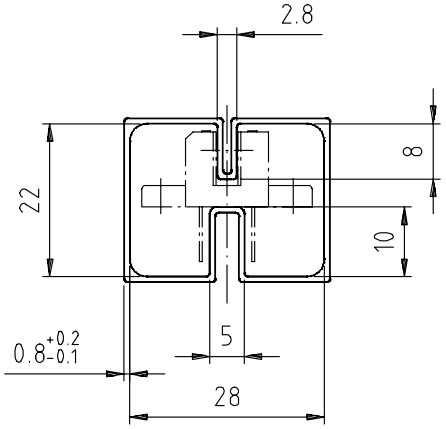

With rubber stopper
Tolerance: ±0.5mm
Length: 575±1mm

Drawing-No.: 9.700-5100.01-4
Issue: 1; 25.02.00

15199

Fig. 4

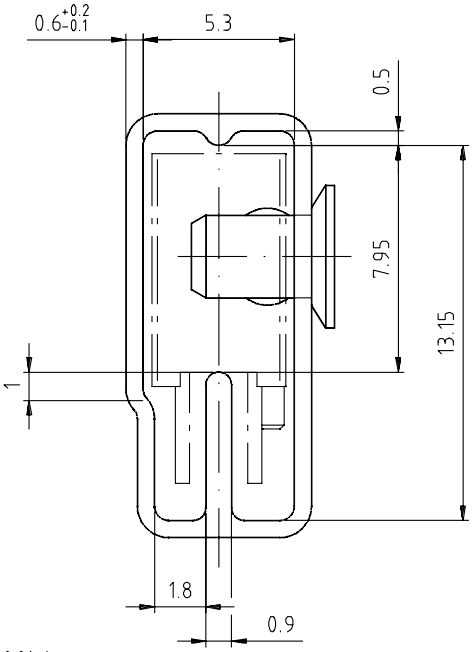

With stopper pins
Tolerance: ±0.5mm
Length: 575±1mm

Drawing-No.: 9.700-5140.01-4
Issue: 1; 25.02.00

15202

Fig. 5

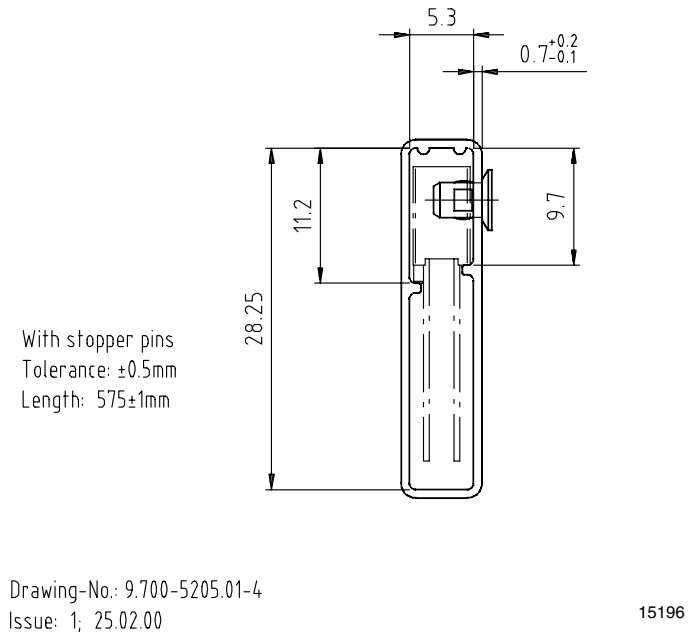
5.3
0.7+0.2-0.1
11.2
9.7
28.25
With stopper pins
Tolerance: ±0.5mm
Length: 575±1mm
Drawing-No.: 9.700-5205.01-4
Issue: 1; 25.02.00
15196

Fig. 6

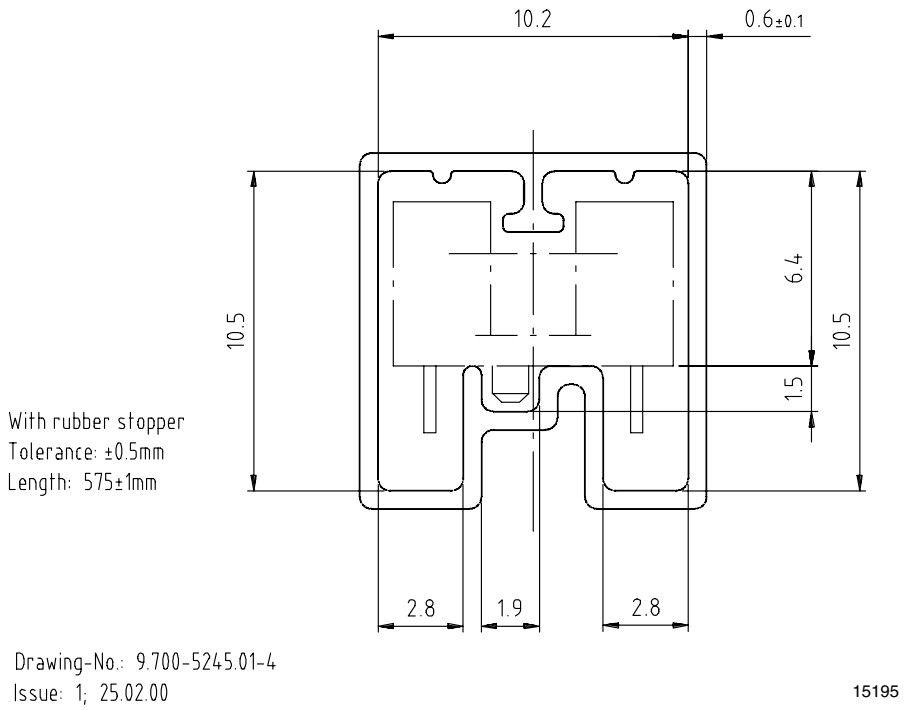
10.2
0.6±0.1
10.5
6.4
10.5
1.5
With rubber stopper
Tolerance: ±0.5mm
Length: 575±1mm
2.8
1.9
2.8
Drawing-No.: 9.700-5245.01-4
Issue: 1; 25.02.00
15195

Fig. 7

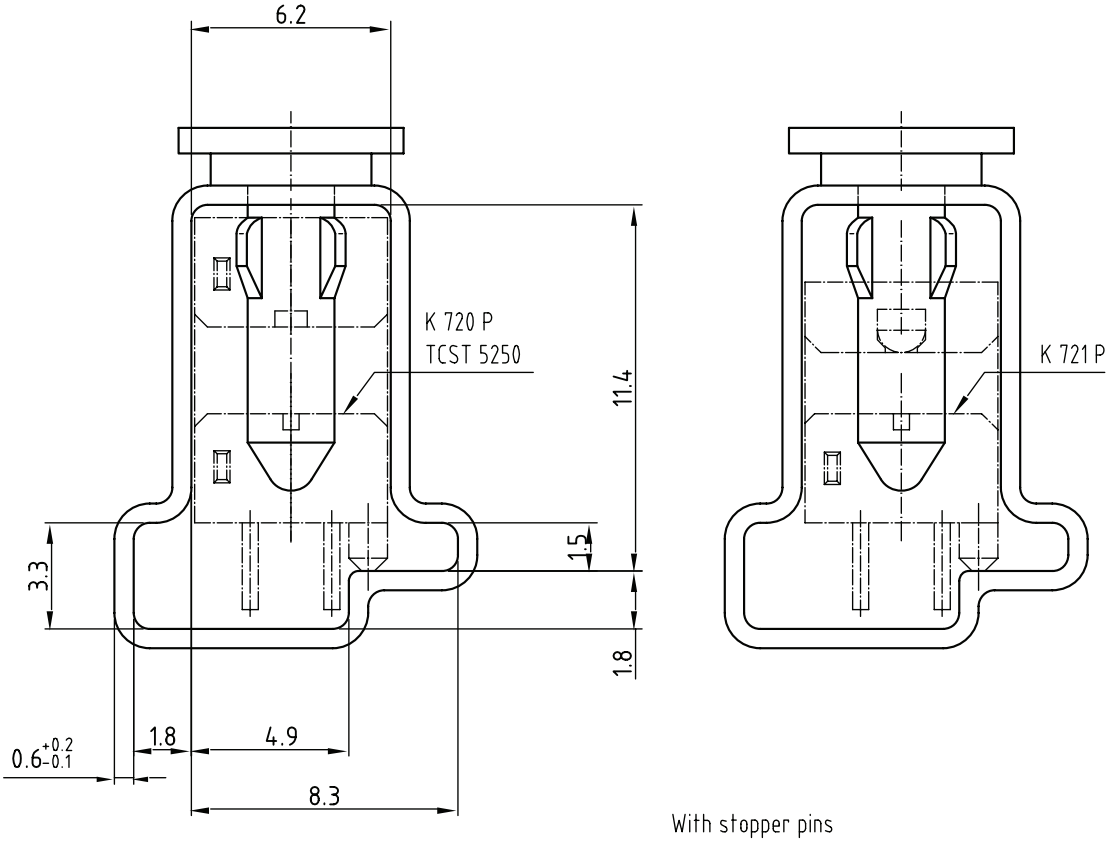

Drawing-No.: 9.700-5222.01-4
Issue: 2; 19.11.04
20257

With stopper pins
Tolerance: ±0.5mm
Length: 450±1mm
All dimensions in mm

Fig. 8

Disclaimer

ALL PRODUCT, PRODUCT SPECIFICATIONS AND DATA ARE SUBJECT TO CHANGE WITHOUT NOTICE TO IMPROVE RELIABILITY, FUNCTION OR DESIGN OR OTHERWISE.

Vishay Intertechnology, Inc., its affiliates, agents, and employees, and all persons acting on its or their behalf (collectively, “Vishay”), disclaim any and all liability for any errors, inaccuracies or incompleteness contained in any datasheet or in any other disclosure relating to any product.

Vishay makes no warranty, representation or guarantee regarding the suitability of the products for any particular purpose or the continuing production of any product. To the maximum extent permitted by applicable law, Vishay disclaims (i) any and all liability arising out of the application or use of any product, (ii) any and all liability, including without limitation special, consequential or incidental damages, and (iii) any and all implied warranties, including warranties of fitness for particular purpose, non-infringement and merchantability.

Statements regarding the suitability of products for certain types of applications are based on Vishay's knowledge of typical requirements that are often placed on Vishay products in generic applications. Such statements are not binding statements about the suitability of products for a particular application. It is the customer's responsibility to validate that a particular product with the properties described in the product specification is suitable for use in a particular application. Parameters provided in datasheets and / or specifications may vary in different applications and performance may vary over time. All operating parameters, including typical parameters, must be validated for each customer application by the customer's technical experts. Product specifications do not expand or otherwise modify Vishay's terms and conditions of purchase, including but not limited to the warranty expressed therein.

Hyperlinks included in this datasheet may direct users to third-party websites. These links are provided as a convenience and for informational purposes only. Inclusion of these hyperlinks does not constitute an endorsement or an approval by Vishay of any of the products, services or opinions of the corporation, organization or individual associated with the third-party website. Vishay disclaims any and all liability and bears no responsibility for the accuracy, legality or content of the third-party website or for that of subsequent links.

Except as expressly indicated in writing, Vishay products are not designed for use in medical, life-saving, or life-sustaining applications or for any other application in which the failure of the Vishay product could result in personal injury or death. Customers using or selling Vishay products not expressly indicated for use in such applications do so at their own risk. Please contact authorized Vishay personnel to obtain written terms and conditions regarding products designed for such applications.

No license, express or implied, by estoppel or otherwise, to any intellectual property rights is granted by this document or by any conduct of Vishay. Product names and markings noted herein may be trademarks of their respective owners.

© 2023 VISHAY INTERTECHNOLOGY, INC. ALL RIGHTS RESERVED