High Power Infrared Emitting Diode, 940 nm, GaAlAs, MQW

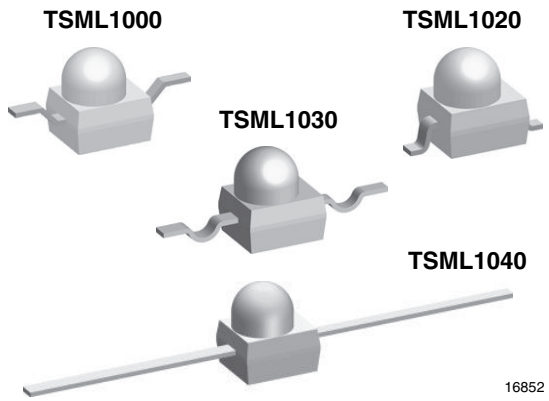

FEATURES

- Package type: surface-mount
- Package form: GW, RGW, yoke, axial
- Dimensions (L x W x H in mm): 2.5 x 2 x 2.7
- Peak wavelength: λ_p = 940 nm
- High radiant power
- High radiant intensity
- Angle of half intensity: φ = ± 12°
- Low forward voltage
- Suitable for high pulse current operation
- Good spectral matching with Si photodetectors
- Versatile terminal configurations
- Package matches with detector TEMT1000
- Floor life: 168 h, MSL 3, according to J-STD-020
- Material categorization: for definitions of compliance please see www.vishay.com/doc?99912

Pb-free

e3

RoHS COMPLIANT

DESCRIPTION

TSML1000 is an infrared, 940 nm emitting diode in GaAlAs multi quantum well (MQW) technology with high radiant power and high speed molded in a clear, untinted plastic package (with lens) for surface mounting (SMD).

APPLICATIONS

- For remote control
- Encoder
- Photointerrupters

PRODUCT SUMMARY

COMPONENT	I_e (mW/sr) at I_F = 20 mA	φ (°)	λ_P (nm)	t_r (ns)
TSML1000	11	± 12	940	15
TSML1020	11	± 12	940	15
TSML1030	11	± 12	940	15
TSML1040	11	± 12	940	15

Note

- Test conditions see table “Basic Characteristics”

ORDERING INFORMATION

ORDERING CODE	PACKAGING	REMARKS	PACKAGE FORM
TSML1000	Tape and reel	MOQ: 1000 pcs, 1000 pcs/reel	Reverse gullwing
TSML1020	Tape and reel	MOQ: 1000 pcs, 1000 pcs/reel	Gullwing
TSML1030	Tape and reel	MOQ: 1000 pcs, 1000 pcs/reel	Yoke
TSML1040	Bulk	MOQ: 1000 pcs, 1000 pcs/bulk	Axial leads

Note

- MOQ: minimum order quantity

For technical questions, contact: emittertechsupport@vishay.com
THIS DOCUMENT IS SUBJECT TO CHANGE WITHOUT NOTICE. THE PRODUCTS DESCRIBED HEREIN AND THIS DOCUMENT ARE SUBJECT TO SPECIFIC DISCLAIMERS, SET FORTH AT www.vishay.com/doc?91000

ABSOLUTE MAXIMUM RATINGS (T_{amb} = 25 °C, unless otherwise specified)				
PARAMETER	**TEST CONDITION**	**SYMBOL**	**VALUE**	**UNIT**
Reverse voltage		V_R	5	V
Forward current		I_F	100	mA
Peak forward current	t_p/T = 0.5, t_p = 100 µs	I_{FM}	200	mA
Surge forward current	t_p = 100 µs	I_{FSM}	1.0	A
Power dissipation		P_V	160	mW
Junction temperature		T_j	100	°C
Operating temperature range		T_{amb}	-40 to +85	°C
Storage temperature range		T_{stg}	-40 to +100	°C
Soldering temperature	According to Fig. 10, J-STD-020	T_{sd}	260	°C
Thermal resistance junction to ambient	EIA / JESD51	R_{thJA}	400	K/W

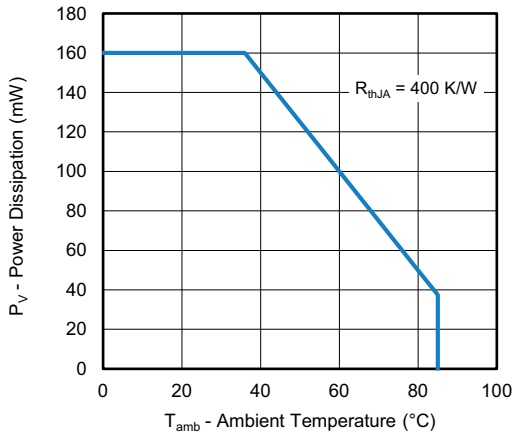

Fig. 1 - Power Dissipation Limit vs. Ambient Temperature

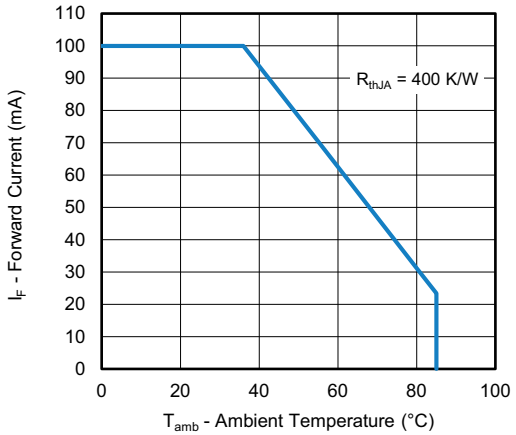

Fig. 2 - Forward Current vs. Ambient Temperature

BASIC CHARACTERISTICS (T_{amb} = 25 °C, unless otherwise specified)						
PARAMETER	**TEST CONDITION**	**SYMBOL**	**MIN.**	**TYP.**	**MAX.**	**UNIT**
Forward voltage	I_F = 20 mA, t_p = 20 ms	V_F	-	1.2	1.5	V
	I_F = 1 A, t_p = 100 µs	V_F	-	2.2	-	V
Temperature coefficient of V_F	I_F = 1 mA	TK_{VF}	-	-1.8	-	mV/K
Reverse current	V_R = 5 V	I_R	-	-	10	µA
Junction capacitance	V_R = 0 V, f = 1 MHz, E = 0	C_j	-	40	-	pF
Radiant intensity	I_F = 20 mA, t_p = 20 ms	I_e	3	11	15	mW/sr
Radiant power	I_F = 100 mA, t_p = 20 ms	ϕ_e	-	40	-	mW
Temperature coefficient of ϕ_e	I_F = 20 mA	$TK\phi_e$	-	-0.6	-	%/K
Angle of half intensity		φ	-	± 12	-	°
Peak wavelength	I_F = 100 mA	λ_p	-	940	-	nm
Spectral bandwidth	I_F = 100 mA	$\Delta\lambda$	-	30	-	nm
Temperature coefficient of λ_p	I_F = 100 mA	$TK\lambda_p$	-	0.2	-	nm/K
Rise time	I_F = 100 mA	t_r	-	15	-	ns
Fall time	I_F = 100 mA	t_f	-	15	-	ns

For technical questions, contact: emittertechsupport@vishay.com
THIS DOCUMENT IS SUBJECT TO CHANGE WITHOUT NOTICE. THE PRODUCTS DESCRIBED HEREIN AND THIS DOCUMENT ARE SUBJECT TO SPECIFIC DISCLAIMERS, SET FORTH AT www.vishay.com/doc?91000

BASIC CHARACTERISTICS (T_{amb} = 25 °C, unless otherwise specified)

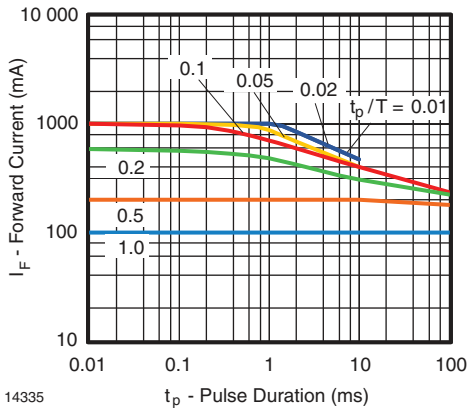

Fig. 3 - Pulse Forward Current vs. Pulse Duration

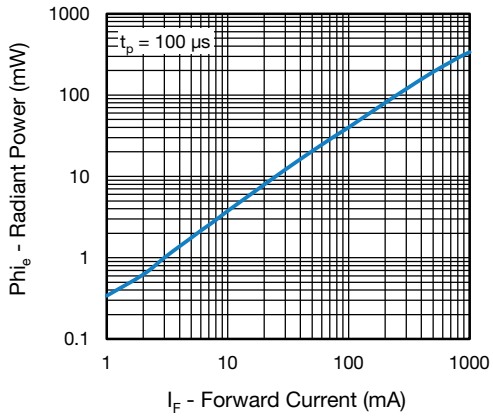

Fig. 6 - Radiant Power vs. Forward Current

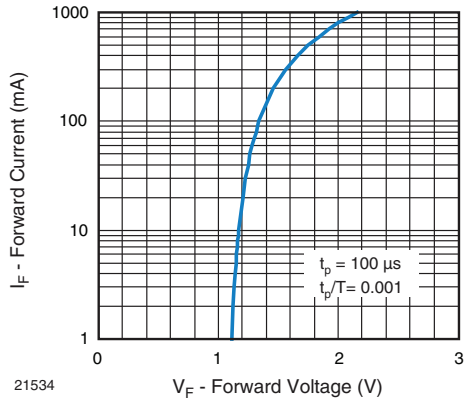

Fig. 4 - Forward Current vs. Forward Voltage

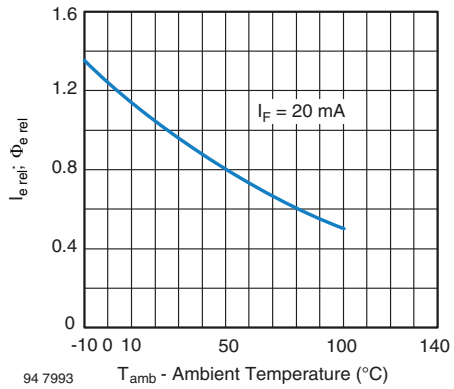

Fig. 7 - Relative Radiant Intensity/Power vs. Ambient Temperature

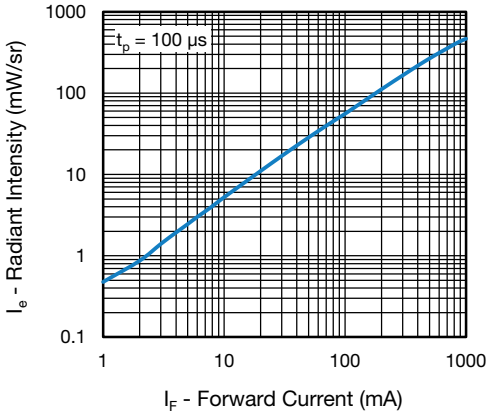

Fig. 5 - Radiant Intensity vs. Forward Current

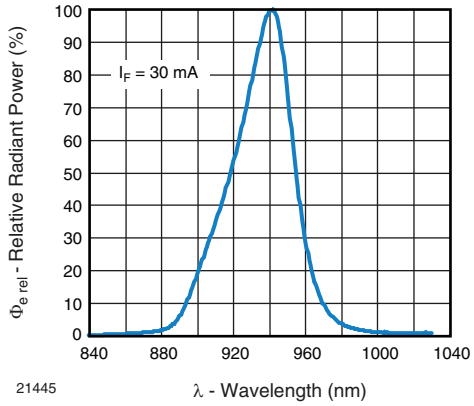

Fig. 8 - Relative Radiant Power vs. Wavelength

For technical questions, contact: emittertechsupport@vishay.com
THIS DOCUMENT IS SUBJECT TO CHANGE WITHOUT NOTICE. THE PRODUCTS DESCRIBED HEREIN AND THIS DOCUMENT ARE SUBJECT TO SPECIFIC DISCLAIMERS, SET FORTH AT www.vishay.com/doc?91000

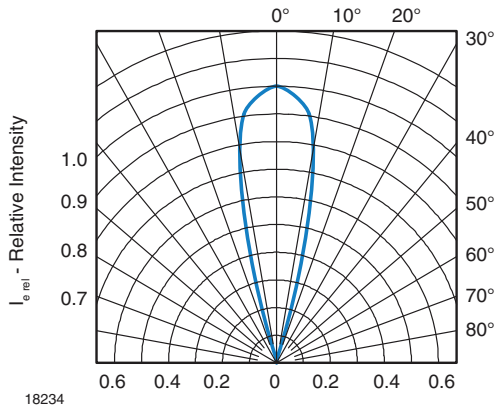

Fig. 9 - Relative Radiant Intensity vs. Angular Displacement

PRECAUTIONS FOR USE

1. Over-current-proof

Customer must apply resistors for protection, otherwise slight voltage shift will cause big current change (burn out will happen).

2. Storage

- Storage temperature and rel. humidity conditions are: 5 °C to 35 °C, R.H. 60 %.
- Floor life must not exceed 168 h, according to JEDEC® level 3, J-STD-020.
  Once the package is opened, the products should be used within a week. Otherwise, they should be kept in a damp proof box with desiccant.
  Considering tape life, we suggest to use products within one year from production date.
- If opened more than one week in an atmosphere 5 °C to 35 °C, R.H. 60 %, devices should be treated at 60 °C ± 5 °C for 15 h.
- If humidity indicator in the package shows pink color (normal blue), then devices should be treated with the same conditions as 2.3.

REFLOW SOLDER PROFILE

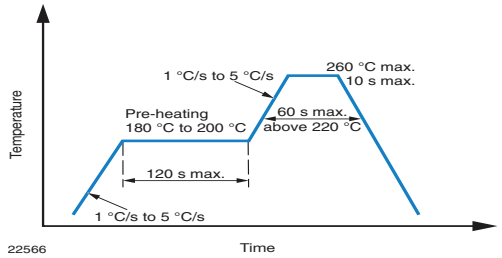

Fig. 10 - Lead (Pb)-Free Reflow Solder Profile According to J-STD-020

For technical questions, contact: emittertechsupport@vishay.com
THIS DOCUMENT IS SUBJECT TO CHANGE WITHOUT NOTICE. THE PRODUCTS DESCRIBED HEREIN AND THIS DOCUMENT ARE SUBJECT TO SPECIFIC DISCLAIMERS, SET FORTH AT www.vishay.com/doc?91000

PACKAGE DIMENSIONS in millimeters: **TSML1000**

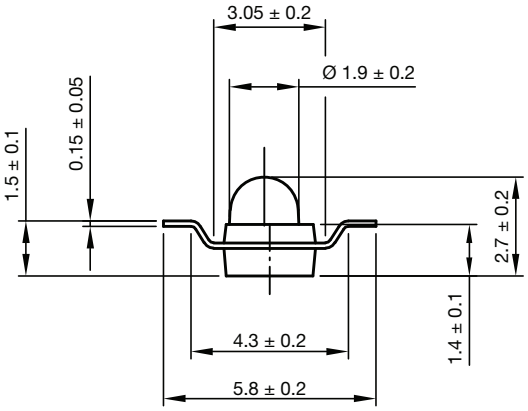

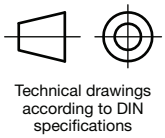

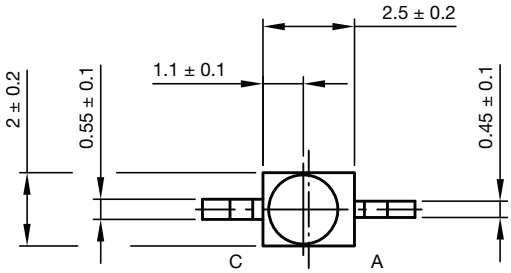

Solder pad proposal

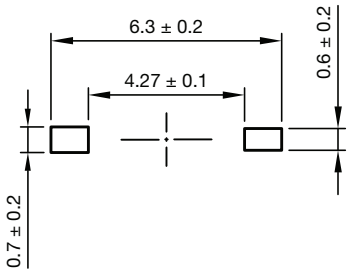

Drawing-No.: 6.544-5326.02-4
Issue: 5; 15.09.2021

PACKAGE DIMENSIONS in millimeters: **TSML1020**

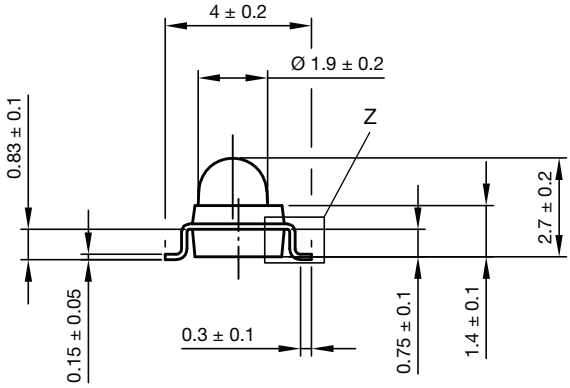

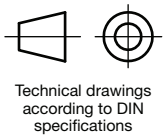

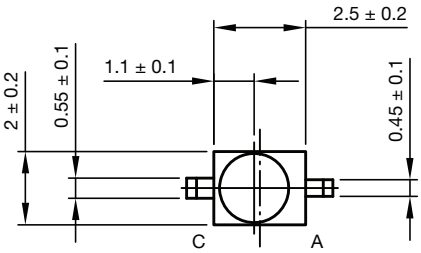

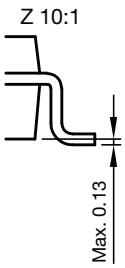

Solder pad proposal

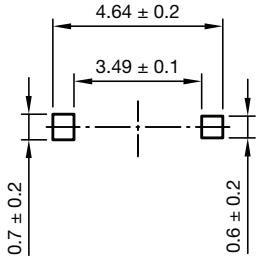

Drawing-No.: 6.544-5325.02-4
Issue: 5; 15.09.2021

For technical questions, contact: emittertechsupport@vishay.com
THIS DOCUMENT IS SUBJECT TO CHANGE WITHOUT NOTICE. THE PRODUCTS DESCRIBED HEREIN AND THIS DOCUMENT ARE SUBJECT TO SPECIFIC DISCLAIMERS, SET FORTH AT www.vishay.com/doc?91000

PACKAGE DIMENSIONS in millimeters: **TSML1030**

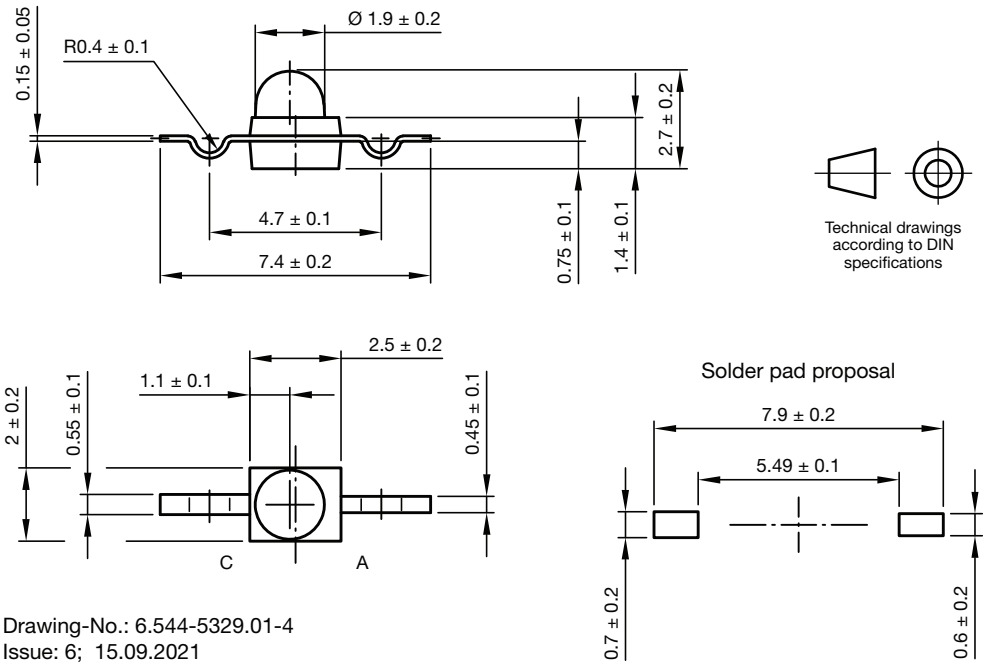

Drawing-No.: 6.544-5329.01-4
Issue: 6; 15.09.2021

PACKAGE DIMENSIONS in millimeters: **TSML1040**

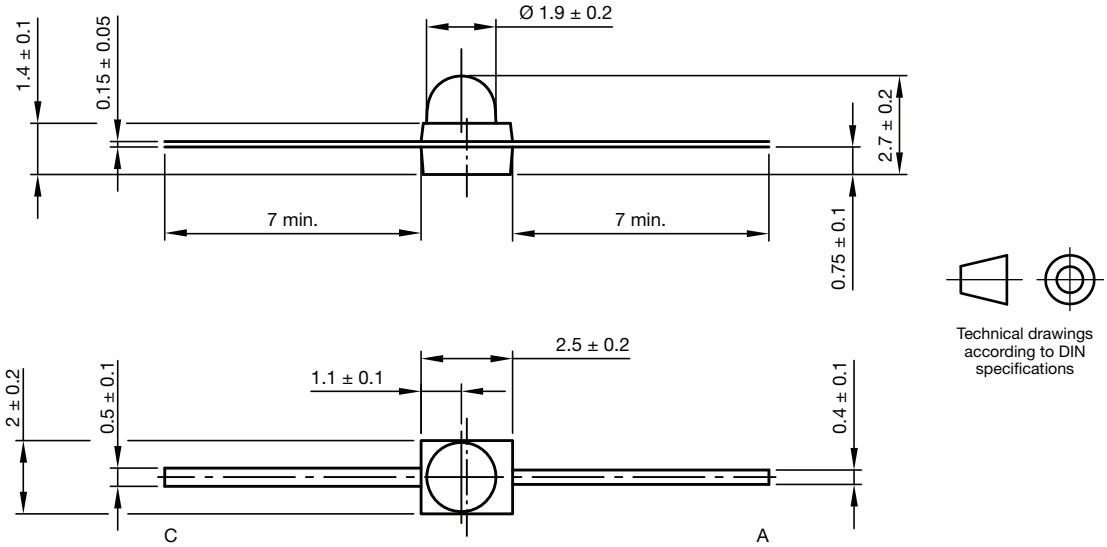

Drawing-No.: 6.544-5339.02-4
Issue: 4; 04.08.2021

For technical questions, contact: emittertechsupport@vishay.com
THIS DOCUMENT IS SUBJECT TO CHANGE WITHOUT NOTICE. THE PRODUCTS DESCRIBED HEREIN AND THIS DOCUMENT ARE SUBJECT TO SPECIFIC DISCLAIMERS, SET FORTH AT www.vishay.com/doc?91000

REEL DIMENSIONS in millimeters

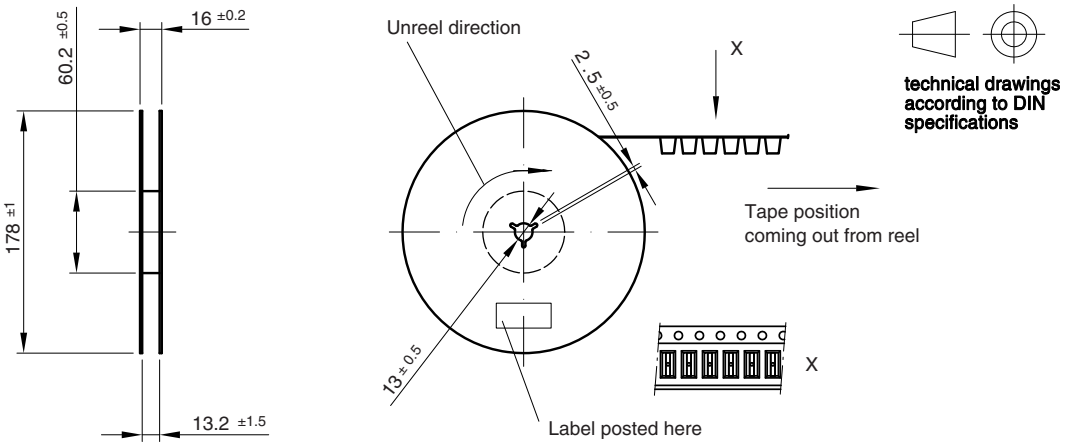

Leader and trailer tape:

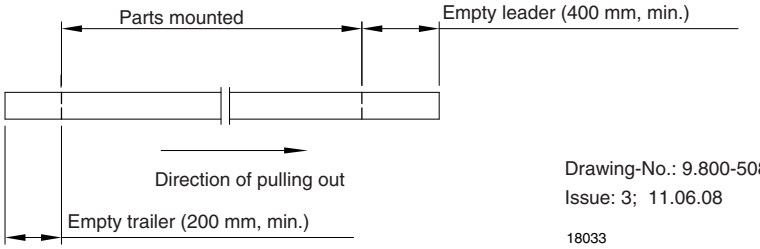

Drawing-No.: 9.800-5080.01-4
Issue: 3; 11.06.08

18033

TAPING DIMENSIONS in millimeters: **TSML1000**

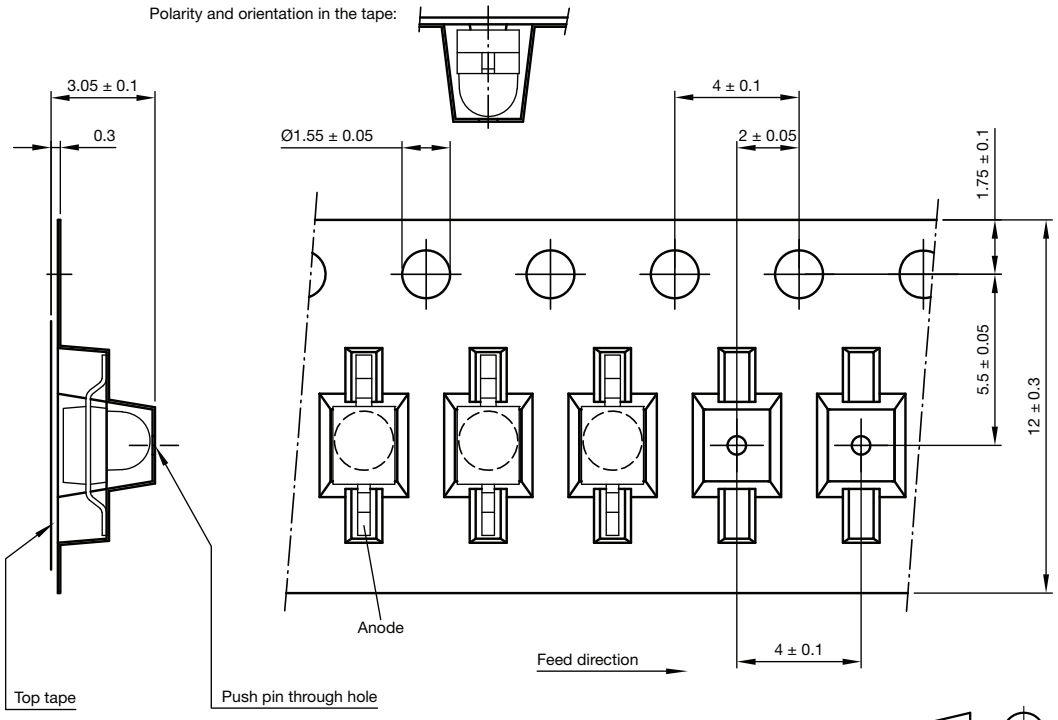

Quantity per reel: 1000 pcs.

Drawing-No.: 9.700-5268.01-4
Issue: 3; 28.09.2021

Technical drawings according to DIN specifications

For technical questions, contact: emittertechsupport@vishay.com
THIS DOCUMENT IS SUBJECT TO CHANGE WITHOUT NOTICE. THE PRODUCTS DESCRIBED HEREIN AND THIS DOCUMENT ARE SUBJECT TO SPECIFIC DISCLAIMERS, SET FORTH AT www.vishay.com/doc?91000

TAPING DIMENSIONS in millimeters: **TSML1020**

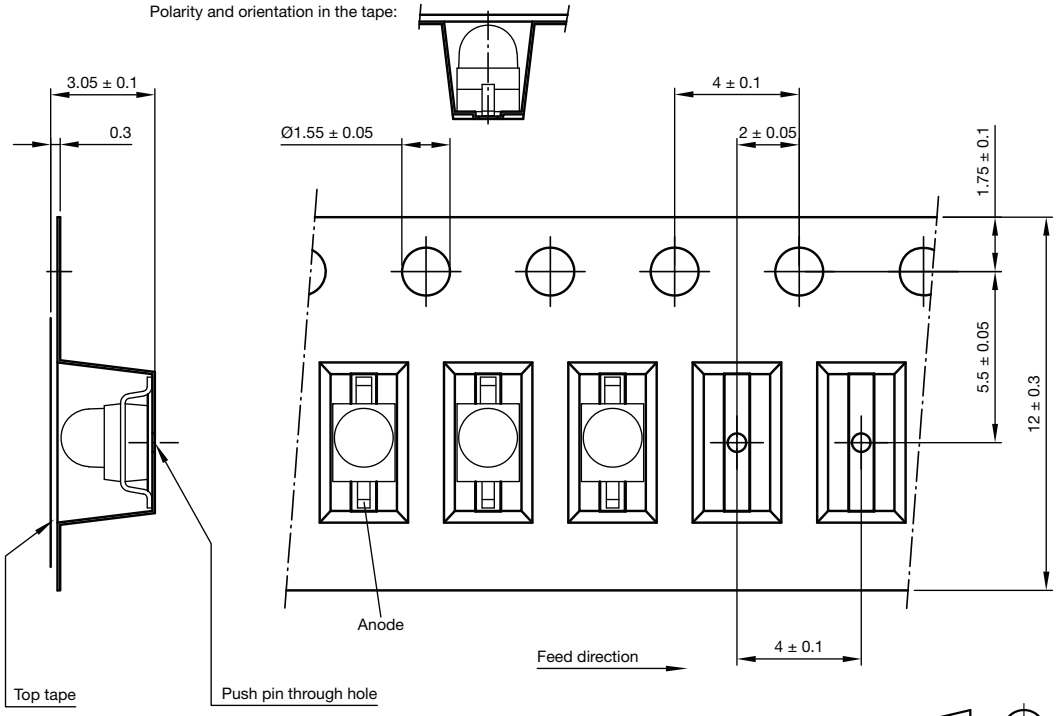

Quantity per reel: 1000 pcs.

Drawing-No.: 9.700-5269.01-4
Issue: 3; 28.09.2021

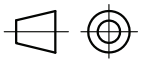

Technical drawings according to DIN specifications

TAPING DIMENSIONS in millimeters: **TSML1030**

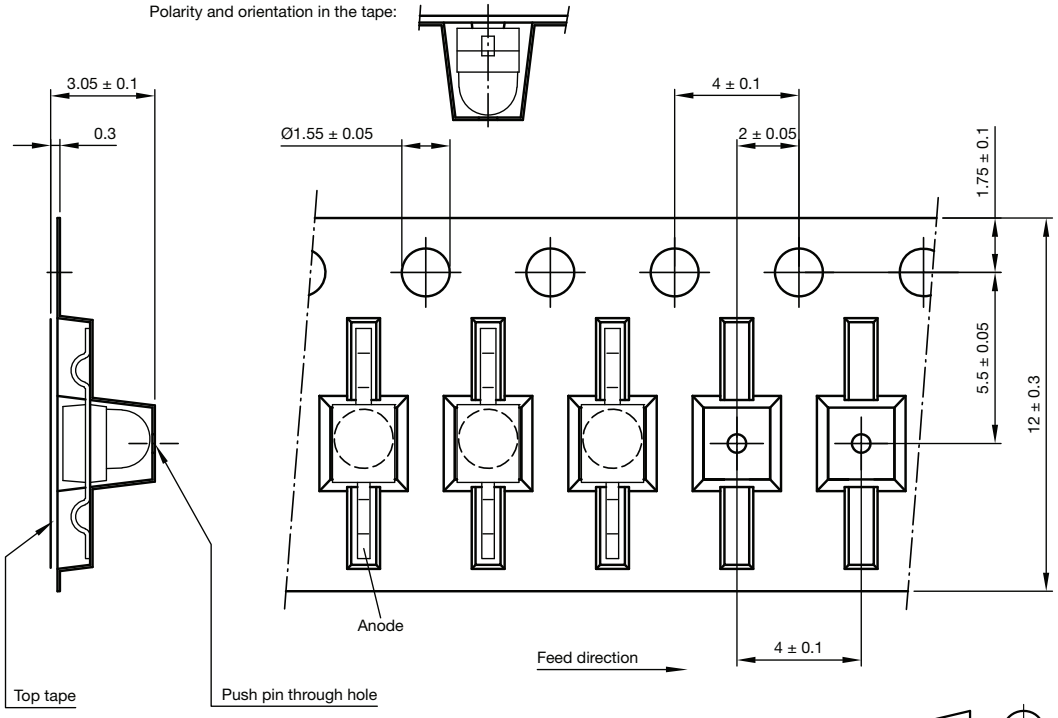

Quantity per reel: 1000 pcs.

Drawing-No.: 9.700-5270.01-4
Issue: 3; 28.09.2021

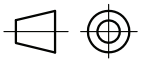

Technical drawings according to DIN specifications

For technical questions, contact: emittertechsupport@vishay.com
THIS DOCUMENT IS SUBJECT TO CHANGE WITHOUT NOTICE. THE PRODUCTS DESCRIBED HEREIN AND THIS DOCUMENT ARE SUBJECT TO SPECIFIC DISCLAIMERS, SET FORTH AT www.vishay.com/doc?91000

Disclaimer

ALL PRODUCT, PRODUCT SPECIFICATIONS AND DATA ARE SUBJECT TO CHANGE WITHOUT NOTICE TO IMPROVE RELIABILITY, FUNCTION OR DESIGN OR OTHERWISE.

Vishay Intertechnology, Inc., its affiliates, agents, and employees, and all persons acting on its or their behalf (collectively, “Vishay”), disclaim any and all liability for any errors, inaccuracies or incompleteness contained in any datasheet or in any other disclosure relating to any product.

Vishay makes no warranty, representation or guarantee regarding the suitability of the products for any particular purpose or the continuing production of any product. To the maximum extent permitted by applicable law, Vishay disclaims (i) any and all liability arising out of the application or use of any product, (ii) any and all liability, including without limitation special, consequential or incidental damages, and (iii) any and all implied warranties, including warranties of fitness for particular purpose, non-infringement and merchantability.

Statements regarding the suitability of products for certain types of applications are based on Vishay's knowledge of typical requirements that are often placed on Vishay products in generic applications. Such statements are not binding statements about the suitability of products for a particular application. It is the customer's responsibility to validate that a particular product with the properties described in the product specification is suitable for use in a particular application. Parameters provided in datasheets and / or specifications may vary in different applications and performance may vary over time. All operating parameters, including typical parameters, must be validated for each customer application by the customer's technical experts. Product specifications do not expand or otherwise modify Vishay's terms and conditions of purchase, including but not limited to the warranty expressed therein.

Hyperlinks included in this datasheet may direct users to third-party websites. These links are provided as a convenience and for informational purposes only. Inclusion of these hyperlinks does not constitute an endorsement or an approval by Vishay of any of the products, services or opinions of the corporation, organization or individual associated with the third-party website. Vishay disclaims any and all liability and bears no responsibility for the accuracy, legality or content of the third-party website or for that of subsequent links.

Except as expressly indicated in writing, Vishay products are not designed for use in medical, life-saving, or life-sustaining applications or for any other application in which the failure of the Vishay product could result in personal injury or death. Customers using or selling Vishay products not expressly indicated for use in such applications do so at their own risk. Please contact authorized Vishay personnel to obtain written terms and conditions regarding products designed for such applications.

No license, express or implied, by estoppel or otherwise, to any intellectual property rights is granted by this document or by any conduct of Vishay. Product names and markings noted herein may be trademarks of their respective owners.

© 2023 VISHAY INTERTECHNOLOGY, INC. ALL RIGHTS RESERVED