High Speed Optocoupler, 10 MBd

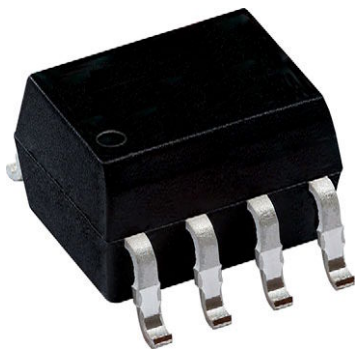

DESCRIPTION

The VOIH060A is a single channel 10 MBd optocoupler utilizing a high efficient input LED coupled to a high speed integrated photo-detector logic gate with a strobable output. This detector features an open drain output. The internal shield provides a guaranteed common mode transient immunity of 15 kV/µs.

FEATURES

- CMTI of 15 kV/µs (min.)
- 3.3 V / 5 V dual supply voltage
- LVTTL/LVCMOS compatibility
- Low power consumption
- Material categorization:
  for definitions of compliance please see www.vishay.com/doc?99912

Pb-free
e3
RoHS COMPLIANT

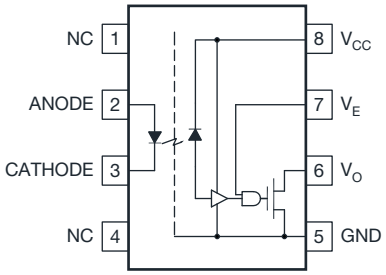

APPLICATIONS

- Microprocessor system interface
- Ground loop elimination
- Digital bus systems isolation
- High speed A/D and D/A conversion
- Digital control power supply
- Level shifting

AGENCY APPROVALS

- UL1577 (pending)
- cUL (pending)
- DIN EN 60747-5-5 (VDE 0884-5), available with option 1 (pending)

ORDERING INFORMATION

V	O	I	H	0	6	0	A	-	X	0	#	#	T
PART NUMBER									PACKAGE OPTION				TAPE AND REEL

AGENCY CERTIFIED / PACKAGE	
UL, cUL	
SOIC-8	VOIH060AT
UL, cUL, VDE (option 1)	
SOIC-8	VOIH060A-X001T

Note

- Additional options may be possible, please contact sales office

For technical questions, contact: optocoupleranswers@vishay.com
THIS DOCUMENT IS SUBJECT TO CHANGE WITHOUT NOTICE. THE PRODUCTS DESCRIBED HEREIN AND THIS DOCUMENT ARE SUBJECT TO SPECIFIC DISCLAIMERS, SET FORTH AT www.vishay.com/doc?91000

ABSOLUTE MAXIMUM RATINGS (T_{amb} = 25 °C, unless otherwise specified)				
PARAMETER	**TEST CONDITION**	**SYMBOL**	**VALUE**	**UNIT**
INPUT				
Input forward current		I_F	20	mA
Reverse input voltage		V_R	5	V
Enable input voltage		V_E	V_{CC} + 0.5 V	V
Enable input current		I_E	5	mA
Input power dissipation		P_{diss}	40	mW
OUTPUT				
Supply voltage		V_{CC}	7	V
Output current		I_O	50	mA
Output voltage		V_O	7	V
Output power dissipation		P_{diss}	85	mW
COUPLER				
Storage temperature		T_{stg}	-55 to +125	°C
Operating temperature		T_{amb}	-40 to +110	°C
Solder reflow temperature [1]	5 s		260	°C

Notes

- Stresses in excess of the absolute maximum ratings can cause permanent damage to the device. Functional operation of the device is not implied at these or any other conditions in excess of those given in the operational sections of this document. Exposure to absolute maximum ratings for extended periods of the time can adversely affect reliability.

[1] Refer to reflow profile for soldering conditions for surface mounted devices (SMD)

RECOMMENDED OPERATING CONDITIONS				
PARAMETER	**SYMBOL**	**MIN.**	**MAX.**	**UNIT**
Operating temperature	T_{amb}	-40	+110	°C
Supply voltage	V_{CC}	2.7	3.6	V
	V_{CC}	4.5	5.5	V
Input current low level	I_{FL}	0	250	µA
Input current high level	I_{FH}	5	15	mA
Logic low enable voltage	V_{EL}	0	0.8	V
Logic high enable voltage	V_{EH}	2	V_{CC}	V
Output pull up resistor	R_L	330	4000	Ω
Fanout (R_L = 1 kΩ)	N	-	5	TTL loads

TRUTH TABLE (positive logic)		
LED	**ENABLE**	**OUTPUT**
On	H	L
Off	H	H
On	L	H
Off	L	H
On	Not connected / open	L
Off	Not connected / open	H

For technical questions, contact: optocoupleranswers@vishay.com
THIS DOCUMENT IS SUBJECT TO CHANGE WITHOUT NOTICE. THE PRODUCTS DESCRIBED HEREIN AND THIS DOCUMENT ARE SUBJECT TO SPECIFIC DISCLAIMERS, SET FORTH AT www.vishay.com/doc?91000

ELECTRICAL CHARACTERSITCS (T_{amb} = -40 °C to +110 °C, 2.7 V ≤ V_{CC} ≤ 3.6 V, I_F = 7.5 mA, unless otherwise specified; typical values are at V_{CC} = 3.3 V, T_{amb} = 25 °C)						
PARAMETER	**TEST CONDITION**	**SYMBOL**	**MIN.**	**TYP.**	**MAX.**	**UNIT**
INPUT						
Input forward voltage	I_F = 10 mA	V_F	-	1.38	1.70	V
Input forward voltage temperature coefficient	I_F = 10 mA	$\Delta V_F/\Delta T$	-	-1.5	-	mV/K
Input reverse voltage	I_R = 10 µA	BV_R	5	-	-	V
Input threshold current	V_E = 2 V, V_O = 0.6 V, V_{CC} = 3.3 V, I_{OL} (sinking) = 13 mA	I_{TH}	-	2	5	mA
Input capacitance	f = 1 MHz, V_F = 0 V	C_I	-	34	-	pF
OUTPUT						
Low level supply current	I_F = 10 mA, V_{CC} = 3.3 V, V_E = 0.5 V	I_{CCL}	-	3.1	5	mA
High level supply current	I_F = 0 mA, V_{CC} = 3.3 V, V_E = 0.5 V	I_{CCH}	-	3.3	5	mA
Low level enable current	V_{CC} = 3.3 V, V_E = 0.5 V	I_{EL}	-	-0.41	-1.6	mA
High level enable current	V_{CC} = 3.3 V, V_E = 2 V	I_{EH}	-	-0.19	-1.6	mA
Low level enable voltage		V_{EL}	-	-	0.8	V
High level enable voltage		V_{EH}	2	-	-	V
Low level output voltage	V_{CC} = 3.3 V, V_E = 2 V, I_F = 5 mA, I_{OL} (sinking) = 13 mA	V_{OL}	-	0.2	0.6	V
High level output current	V_{CC} = 3.3 V, V_E = 2 V, V_O = 3.3 V, I_F = 250 µA	I_{OH}	-	1	10	µA
COUPLER						
Input to output capacitance	f = 1 MHz, T_{amb} = 25 °C	C_{IO}	-	1	-	pF

Note

- Minimum and maximum values are testing requirements. Typical values are characteristics of the device and are the result of engineering evaluation. Typical values are for information only and are not part of the testing requirements.

ELECTRICAL CHARACTERSITCS (T_{amb} = -40 °C to +110 °C, 4.5 V ≤ V_{CC} ≤ 5.5 V, I_F = 7.5 mA, unless otherwise specified; typical values are at V_{CC} = 5.0 V, T_{amb} = 25 °C)						
PARAMETER	**TEST CONDITION**	**SYMBOL**	**MIN.**	**TYP.**	**MAX.**	**UNIT**
INPUT						
Input forward voltage	I_F = 10 mA	V_F	-	1.38	1.70	V
Input forward voltage temperature coefficient	I_F = 10 mA	$\Delta V_F/\Delta T$	-	-1.5	-	mV/K
Input reverse voltage	I_R = 10 µA	BV_R	5	-	-	V
Input threshold current	V_E = 2 V, V_O = 0.6 V, V_{CC} = 5.5 V, I_{OL} (sinking) = 13 mA	I_{TH}	-	2	5	mA
Input capacitance	f = 1 MHz, V_F = 0 V	C_I	-	34	-	pF
OUTPUT						
Low level supply current	I_F = 10 mA, V_{CC} = 5.5 V, V_E = 0.5 V	I_{CCL}	-	3.5	5	mA
High level supply current	I_F = 0 mA, V_{CC} = 5.5 V, V_E = 0.5 V	I_{CCH}	-	3.7	5	mA
Low level enable current	V_{CC} = 5.5 V, V_E = 0.5 V	I_{EL}	-	-0.9	-1.6	mA
High level enable current	V_{CC} = 5.5 V, V_E = 2 V	I_{EH}	-	-0.6	-1.6	mA
Low level enable voltage		V_{EL}	-	-	0.8	V
High level enable voltage		V_{EH}	2	-	-	V
Low level output voltage	V_{CC} = 5.5 V, V_E = 2 V, I_F = 5 mA, I_{OL} (sinking) = 13 mA	V_{OL}	-	0.20	0.60	V
High level output current	V_{CC} = 5.5 V, V_E = 2 V, V_O = 5.5 V, I_F = 250 µA	I_{OH}	-	1	10	µA
COUPLER						
Collector emitter capacitance	f = 1 MHz, T_{amb} = 25 °C	C_{IO}	-	1	-	pF

Note

- Minimum and maximum values are testing requirements. Typical values are characteristics of the device and are the result of engineering evaluation. Typical values are for information only and are not part of the testing requirements.

For technical questions, contact: optocoupleranswers@vishay.com
THIS DOCUMENT IS SUBJECT TO CHANGE WITHOUT NOTICE. THE PRODUCTS DESCRIBED HEREIN AND THIS DOCUMENT ARE SUBJECT TO SPECIFIC DISCLAIMERS, SET FORTH AT www.vishay.com/doc?91000

SWITCHING CHARACTERISTICS (T_{amb} = -40 °C to +110 °C, 2.7 V ≤ V_{CC} ≤ 3.6 V, I_F = 7.5 mA, unless otherwise specified; typical values are at V_{CC} = 3.3 V, T_{amb} = 25 °C)						
PARAMETER	**TEST CONDITION**	**SYMBOL**	**MIN.**	**TYP.**	**MAX.**	**UNIT**
Propagation delay time to high output level	R_L = 350 Ω, C_L = 15 pF	t_{PLH}	25	50	90	ns
Propagation delay time to low output level	R_L = 350 Ω, C_L = 15 pF	t_{PHL}	25	44	75	ns
Pulse width distortion	R_L = 350 Ω, C_L = 15 pF	$\lvert t_{PLH} - t_{PHL} \rvert$	-	6	-	ns
Propagation delay skew	R_L = 350 Ω, C_L = 15 pF	t_{PSK}	-	-	40	ns
Output rise time (10 % to 90 %)	R_L = 350 Ω, C_L = 15 pF	t_r	-	11	-	ns
Output fall time (90 % to 10 %)	R_L = 350 Ω, C_L = 15 pF	t_f	-	2.3	-	ns
Propagation delay time of enable from V_{EH} to V_{EL}	R_L = 350 Ω, C_L = 15 pF, V_{EL} = 0 V, V_{EH} = 3 V	t_{ELH}	-	15	-	ns
Propagation delay time of enable from V_{EL} to V_{EH}	R_L = 350 Ω, C_L = 15 pF, V_{EL} = 0 V, V_{EH} = 3 V	t_{EHL}	-	15	-	ns

SWITCHING CHARACTERISTICS (T_{amb} = -40 °C to +110 °C, 4.5 V ≤ V_{CC} ≤ 5.5 V, I_F = 7.5 mA, unless otherwise specified; typical values are at V_{CC} = 5.0 V, T_{amb} = 25 °C)						
PARAMETER	**TEST CONDITION**	**SYMBOL**	**MIN.**	**TYP.**	**MAX.**	**UNIT**
Propagation delay time to high output level	R_L = 350 Ω, C_L = 15 pF	t_{PLH}	25	50	90	ns
	R_L = 350 Ω, C_L = 15 pF, T_{amb} = 25 °C	t_{PLH}	-	-	100	ns
Propagation delay time to low output level	R_L = 350 Ω, C_L = 15 pF	t_{PHL}	25	40	75	ns
	R_L = 350 Ω, C_L = 15 pF, T_{amb} = 25 °C	t_{PHL}	-	-	100	ns
Pulse width distortion	R_L = 350 Ω, C_L = 15 pF	$\lvert t_{PLH} - t_{PHL} \rvert$	-	10	-	ns
Propagation delay skew	R_L = 350 Ω, C_L = 15 pF	t_{PSK}	-	-	40	ns
Output rise time (10 % to 90 %)	R_L = 350 Ω, C_L = 15 pF	t_r	-	11	-	ns
Output fall time (90 % to 10 %)	R_L = 350 Ω, C_L = 15 pF	t_f	-	2.3	-	ns
Propagation delay time of enable from V_{EH} to V_{EL}	R_L = 350 Ω, C_L = 15 pF, V_{EL} = 0 V, V_{EH} = 3 V	t_{ELH}	-	15	-	ns
Propagation delay time of enable from V_{EL} to V_{EH}	R_L = 350 Ω, C_L = 15 pF, V_{EL} = 0 V, V_{EH} = 3 V	t_{EHL}	-	15	-	ns

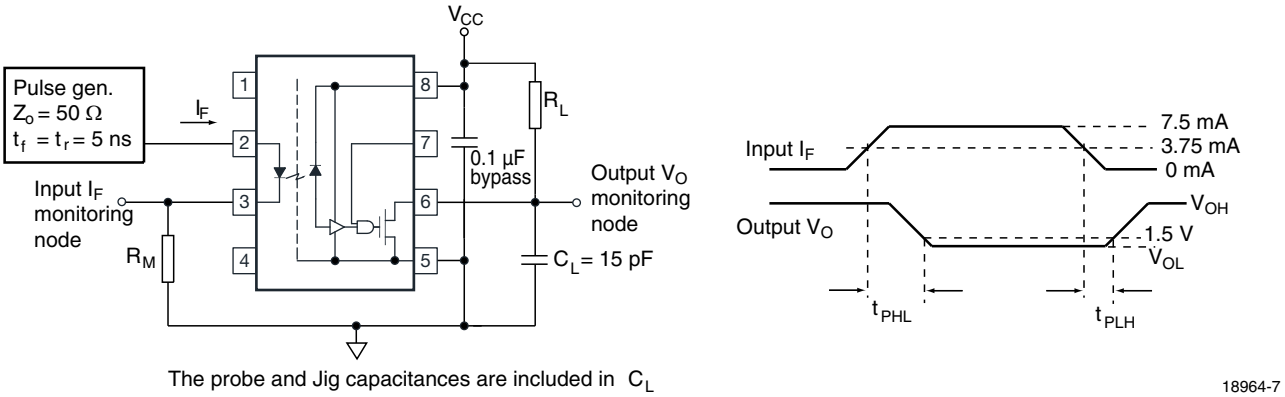

Fig. 1 - Test Circuit for t_{PLH}, t_{PHL}, t_r, and t_f

For technical questions, contact: optocoupleranswers@vishay.com
THIS DOCUMENT IS SUBJECT TO CHANGE WITHOUT NOTICE. THE PRODUCTS DESCRIBED HEREIN AND THIS DOCUMENT ARE SUBJECT TO SPECIFIC DISCLAIMERS, SET FORTH AT www.vishay.com/doc?91000

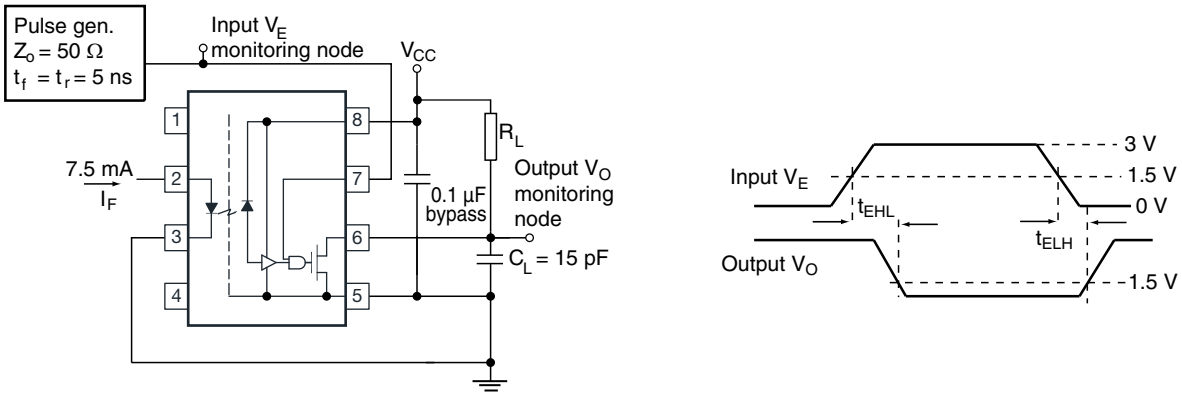

The probe and Jig capacitances are included in C_L

18975-5

Fig. 2 - Test Circuit for t_{EHL}, and t_{ELH}

COMMON MODE TRANSIENT IMMUNITY (T_{amb} = 25 °C, unless otherwise specified)						
PARAMETER	**TEST CONDITION**	**SYMBOL**	**MIN.**	**TYP.**	**MAX.**	**UNIT**
Logic high common mode transient immunity	V_{CC} = 3.3 V, $\|V_{CM}\|$ = 1000 V, I_F = 0 mA, V_O > 2.0 V, R_L = 350 Ω	$\|CM_H\|$	15 000	-	-	V/µs
	V_{CC} = 5 V, $\|V_{CM}\|$ = 1000 V, I_F = 0 mA, V_O > 2.0 V, R_L = 350 Ω	$\|CM_H\|$	15 000	-	-	V/µs
Logic low common mode transient immunity	V_{CC} = 5 V, $\|V_{CM}\|$ = 1000 V, I_F = 10 mA, V_O < 0.8 V, R_L = 350 Ω	$\|CM_L\|$	15 000	-	-	V/µs
	V_{CC} = 5 V, $\|V_{CM}\|$ = 1000 V, I_F = 10 mA, V_O < 0.8 V, R_L = 350 Ω	$\|CM_L\|$	15 000	-	-	V/µs

Notes

- No external pull up is required for a high logic state on the enable input. If the enable pin in not used, connect it to V_{CC}.

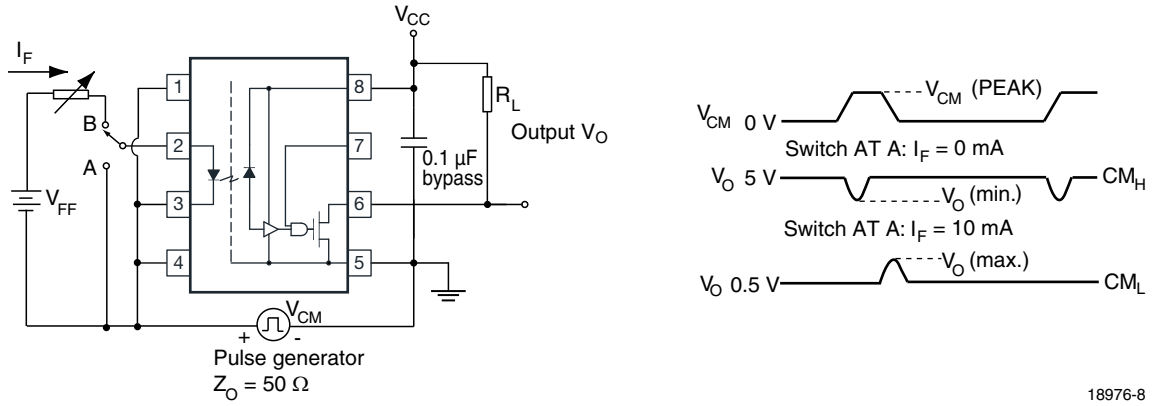

18976-8

Fig. 3 - Test Circuit for Common Mode Transient Immunity

For technical questions, contact: optocoupleranswers@vishay.com
THIS DOCUMENT IS SUBJECT TO CHANGE WITHOUT NOTICE. THE PRODUCTS DESCRIBED HEREIN AND THIS DOCUMENT ARE SUBJECT TO SPECIFIC DISCLAIMERS, SET FORTH AT www.vishay.com/doc?91000

SAFETY AND INSULATION RATINGS				
PARAMETER	**TEST CONDITION**	**SYMBOL**	**VALUE**	**UNIT**
Climatic classification	According to IEC 68 part 1		40 / 100 / 21	
Pollution degree	According to DIN VDE 0109		2	
Comparative tracking index	Insulation group IIIa	CTI	175	
Maximum rated withstanding isolation voltage	According to UL1577, t = 1 min	V_{ISO}	3750	V_{RMS}
Maximum transient isolation voltage	According to DIN EN 60747-5-5	V_{IOTM}	6000	V_{peak}
Maximum repetitive peak isolation voltage	According to DIN EN 60747-5-5	V_{IORM}	567	V_{peak}
Isolation resistance	T_{amb} = 25 °C, V_{IO} = 500 V	R_{IO}	≥ 10^{12}	Ω
Maximum output power dissipation		P_{SO}	85	mW
Maximum input current		I_{SI}	50	mA
Maximum ambient temperature (derated)		T_S	175	°C
Creepage distance			≥ 5	mm
Clearance distance			≥ 5	mm
Insulation thickness		DTI	≥ 0.4	mm

TYPICAL CHARACTERISTICS (T_{amb} = 25 °C, unless otherwise specified)

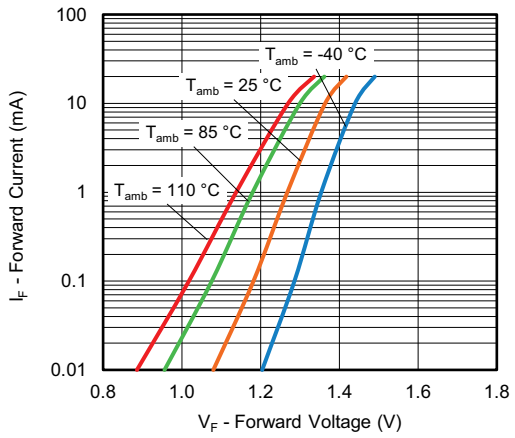

Fig. 4 - Diode Forward Current vs. Forward Voltage

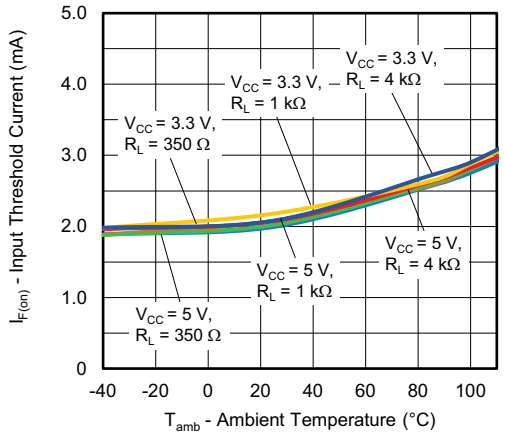

Fig. 5 - Input Threshold Current vs. Ambient Temperature

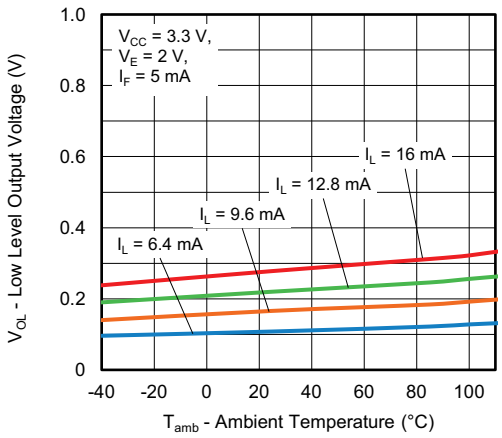

Fig. 6 - Low Level Output Voltage vs. Ambient Temperature

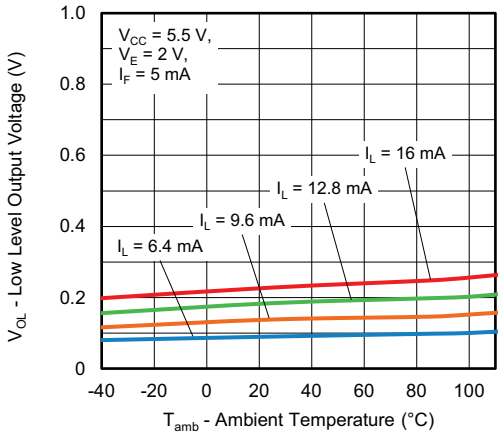

Fig. 7 - Low Level Output Voltage vs. Ambient Temperature

For technical questions, contact: optocoupleranswers@vishay.com
THIS DOCUMENT IS SUBJECT TO CHANGE WITHOUT NOTICE. THE PRODUCTS DESCRIBED HEREIN AND THIS DOCUMENT ARE SUBJECT TO SPECIFIC DISCLAIMERS, SET FORTH AT www.vishay.com/doc?91000

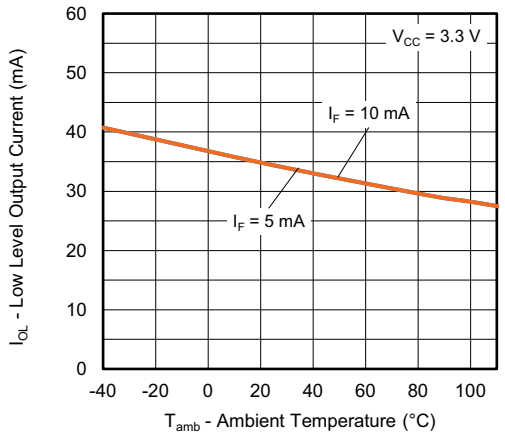

Fig. 8 - Low Level Output Current vs. Ambient Temperature

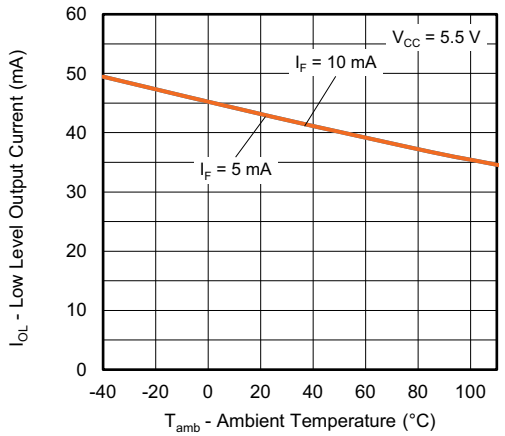

Fig. 9 - Low Level Output Current vs. Ambient Temperature

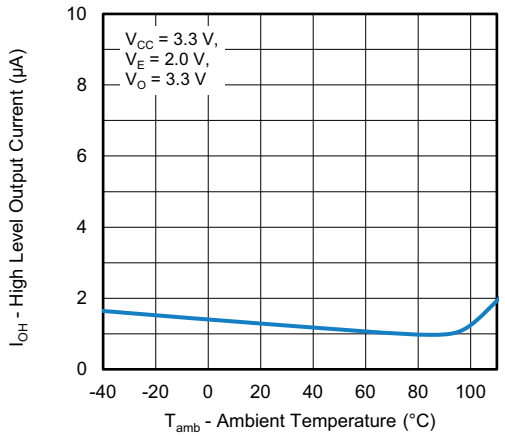

Fig. 10 - High Level Output Current vs. Ambient Temperature

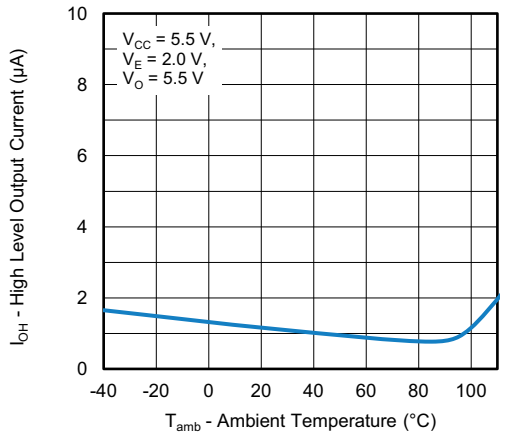

Fig. 11 - High Level Output Current vs. Ambient Temperature

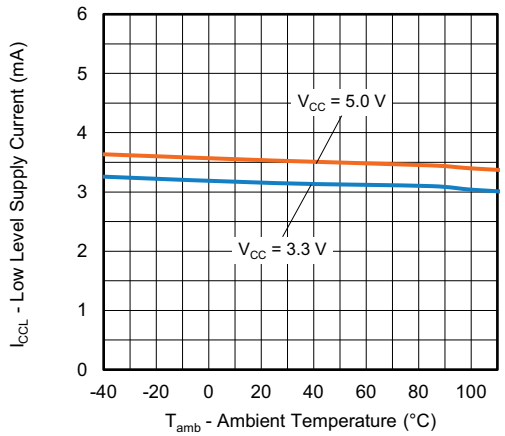

Fig. 12 - Low Level Supply Current vs. Ambient Temperature

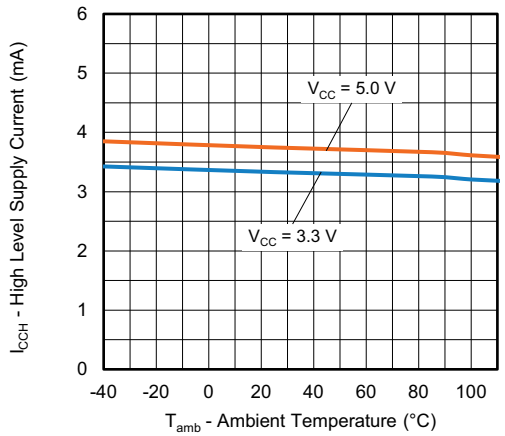

Fig. 13 - High Level Supply Current vs. Ambient Temperature

THIS DOCUMENT IS SUBJECT TO CHANGE WITHOUT NOTICE. THE PRODUCTS DESCRIBED HEREIN AND THIS DOCUMENT ARE SUBJECT TO SPECIFIC DISCLAIMERS, SET FORTH AT www.vishay.com/doc?91000

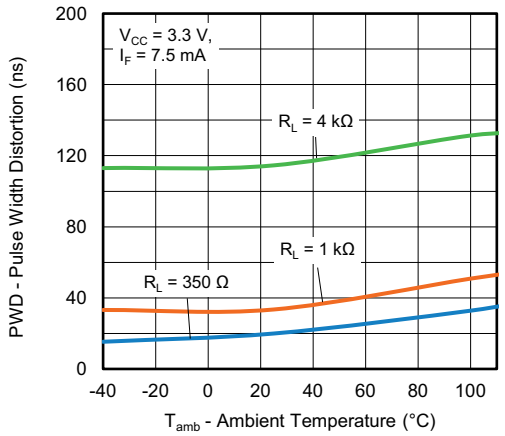

Fig. 14 - Pulse Width Distortion vs. Ambient Temperature

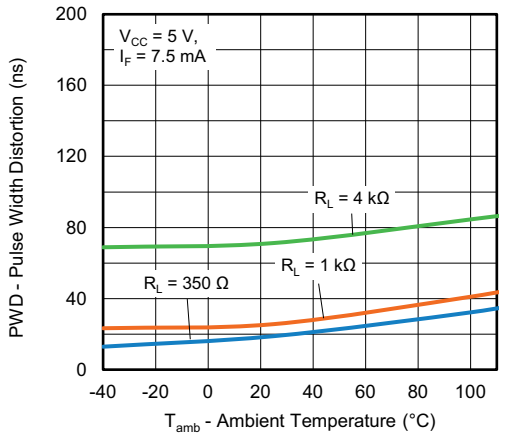

Fig. 15 - Pulse Width Distortion vs. Ambient Temperature

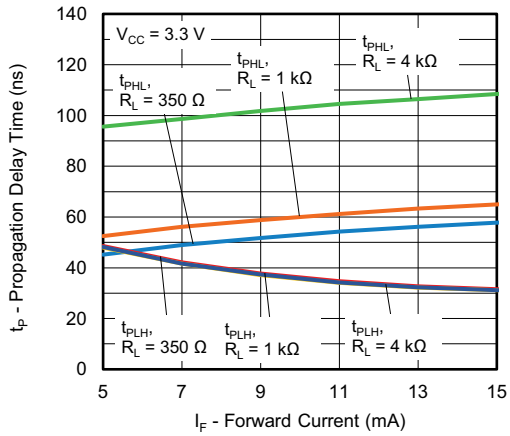

Fig. 16 - Propagation Delay Time vs. Ambient Temperature

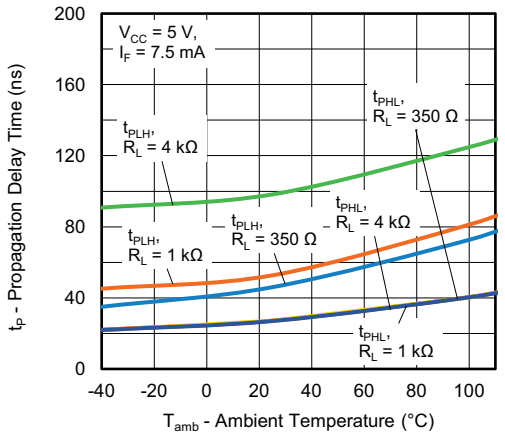

Fig. 17 - Propagation Delay Time vs. Ambient Temperature

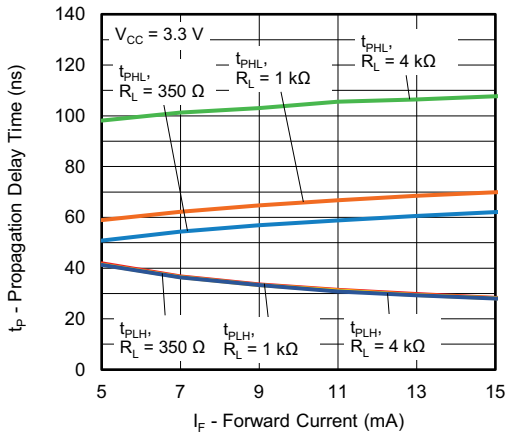

Fig. 18 - Propagation Delay Time vs. Forward Current

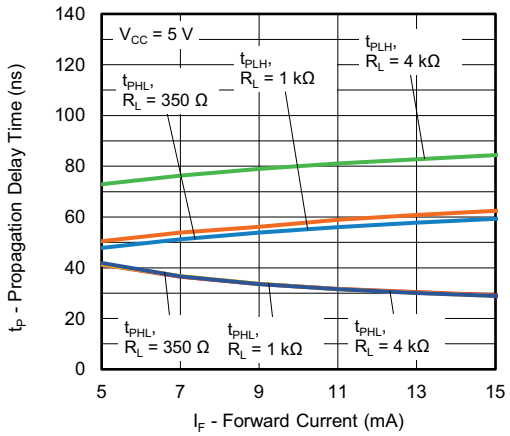

Fig. 19 - Propagation Delay Time vs. Forward Current

THIS DOCUMENT IS SUBJECT TO CHANGE WITHOUT NOTICE. THE PRODUCTS DESCRIBED HEREIN AND THIS DOCUMENT ARE SUBJECT TO SPECIFIC DISCLAIMERS, SET FORTH AT www.vishay.com/doc?91000

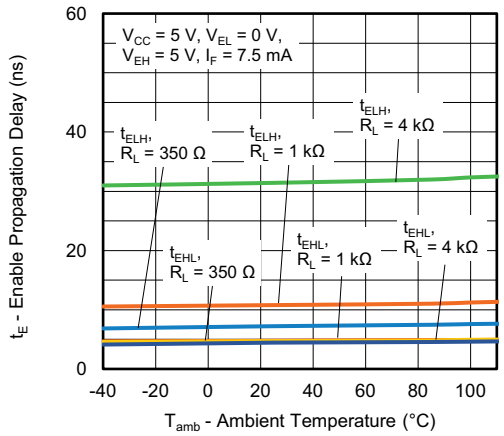

Fig. 20 - Enable Propagation Delay vs. Ambient Temperature

PACKAGE DIMENSIONS (in millimeters)

SOIC-8

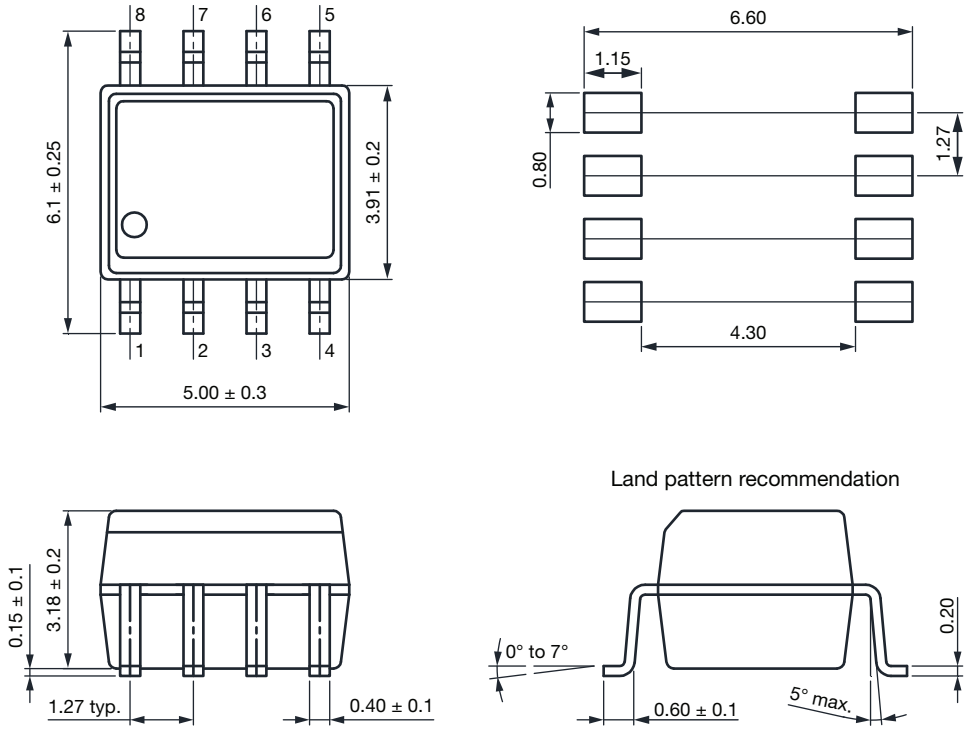

Fig. 21

For technical questions, contact: optocoupleranswers@vishay.com
THIS DOCUMENT IS SUBJECT TO CHANGE WITHOUT NOTICE. THE PRODUCTS DESCRIBED HEREIN AND THIS DOCUMENT ARE SUBJECT TO SPECIFIC DISCLAIMERS, SET FORTH AT www.vishay.com/doc?91000

PACKAGE MARKING

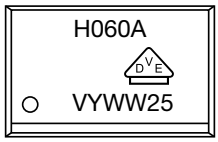

Fig. 22 - Example of VOIH060A-X001T

Notes

- "YWW" is the date code marking (Y = year code, WW = week code)
- The VDE symbol is only marked on VDE option parts
- Tape and reel suffix (T) is not part of the package marking

PACKAGING INFORMATION (in millimeters)

SOIC-8 Tape

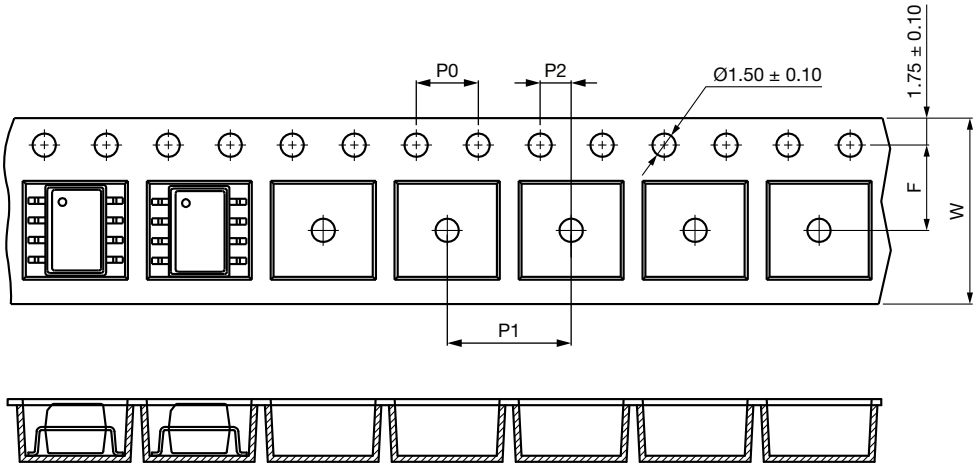

Fig. 23 - Tape and Reel Packaging (2000 pieces on reel)

For technical questions, contact: optocoupleranswers@vishay.com
THIS DOCUMENT IS SUBJECT TO CHANGE WITHOUT NOTICE. THE PRODUCTS DESCRIBED HEREIN AND THIS DOCUMENT ARE SUBJECT TO SPECIFIC DISCLAIMERS, SET FORTH AT www.vishay.com/doc?91000

Reel

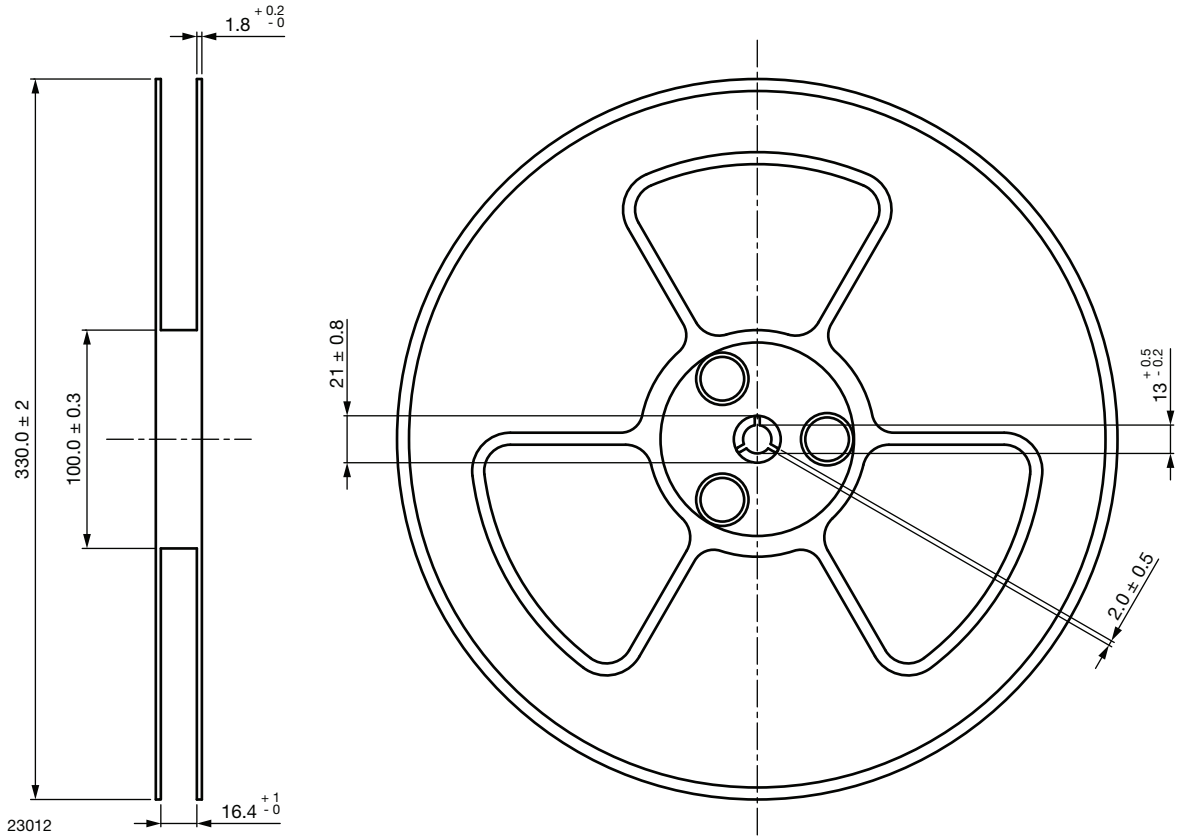

Fig. 24 - Tape and Reel Shipping Medium

For technical questions, contact: optocoupleranswers@vishay.com
THIS DOCUMENT IS SUBJECT TO CHANGE WITHOUT NOTICE. THE PRODUCTS DESCRIBED HEREIN AND THIS DOCUMENT ARE SUBJECT TO SPECIFIC DISCLAIMERS, SET FORTH AT www.vishay.com/doc?91000

SOLDER PROFILES

IR Reflow Soldering (JEDEC® J-STD-020C compliant)

One time soldering reflow is recommended within the condition of temperature and time profile shown below. Do not solder more than three times.

PROFILE ITEM	CONDITIONS
Preheat	
- Temperature minimum ($T_{S\ min.}$)	150 °C
- Temperature maximum ($T_{S\ max.}$)	200 °C
- Time (min. to max.) (t_S)	90 s ± 30 s
Soldering zone	
- Temperature (T_L)	217 °C
- Time (t_L)	60 s
Peak temperature (T_p)	260 °C
Ramp-up rate	3 °C/s max.
Ramp-down rate	3 °C/s to 6 °C/s

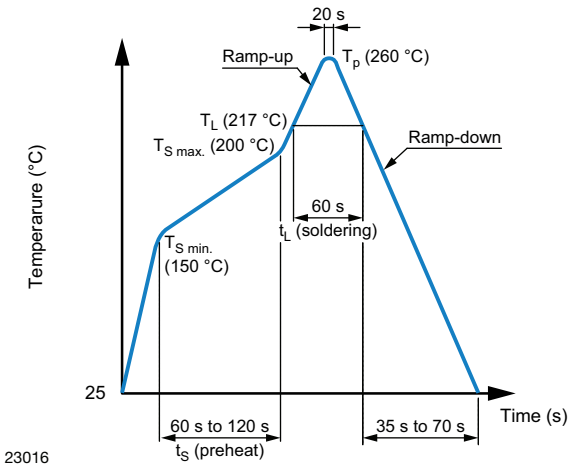

Fig. 25

Wave Soldering (JEDEC JESD22-A111 compliant)

One time soldering is recommended within the condition of temperature.

Temperature: 260 °C + 0 °C / - 5 °C

Time: 10 s

Preheat temperature: 25 °C to 140 °C

Preheat time: 30 s to 80 s

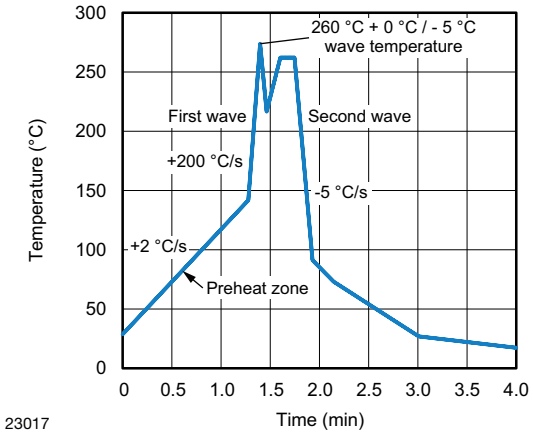

Fig. 26

Hand Soldering by Soldering Iron

Allow single lead soldering in every single process. One time soldering is recommended.

Temperature: 380 °C + 0 °C / - 5 °C

Time: 3 s max.

HANDLING AND STORAGE CONDITIONS

ESD level: HBM class 2

Floor life: unlimited

Conditions: T_{amb} < 30 °C, RH < 85 %

Moisture sensitivity level 1, according to J-STD-020

For technical questions, contact: optocoupleranswers@vishay.com
THIS DOCUMENT IS SUBJECT TO CHANGE WITHOUT NOTICE. THE PRODUCTS DESCRIBED HEREIN AND THIS DOCUMENT ARE SUBJECT TO SPECIFIC DISCLAIMERS, SET FORTH AT www.vishay.com/doc?91000

Disclaimer

ALL PRODUCT, PRODUCT SPECIFICATIONS AND DATA ARE SUBJECT TO CHANGE WITHOUT NOTICE TO IMPROVE RELIABILITY, FUNCTION OR DESIGN OR OTHERWISE.

Vishay Intertechnology, Inc., its affiliates, agents, and employees, and all persons acting on its or their behalf (collectively, “Vishay”), disclaim any and all liability for any errors, inaccuracies or incompleteness contained in any datasheet or in any other disclosure relating to any product.

Vishay makes no warranty, representation or guarantee regarding the suitability of the products for any particular purpose or the continuing production of any product. To the maximum extent permitted by applicable law, Vishay disclaims (i) any and all liability arising out of the application or use of any product, (ii) any and all liability, including without limitation special, consequential or incidental damages, and (iii) any and all implied warranties, including warranties of fitness for particular purpose, non-infringement and merchantability.

Statements regarding the suitability of products for certain types of applications are based on Vishay's knowledge of typical requirements that are often placed on Vishay products in generic applications. Such statements are not binding statements about the suitability of products for a particular application. It is the customer's responsibility to validate that a particular product with the properties described in the product specification is suitable for use in a particular application. Parameters provided in datasheets and / or specifications may vary in different applications and performance may vary over time. All operating parameters, including typical parameters, must be validated for each customer application by the customer's technical experts. Product specifications do not expand or otherwise modify Vishay's terms and conditions of purchase, including but not limited to the warranty expressed therein.

Hyperlinks included in this datasheet may direct users to third-party websites. These links are provided as a convenience and for informational purposes only. Inclusion of these hyperlinks does not constitute an endorsement or an approval by Vishay of any of the products, services or opinions of the corporation, organization or individual associated with the third-party website. Vishay disclaims any and all liability and bears no responsibility for the accuracy, legality or content of the third-party website or for that of subsequent links.

Except as expressly indicated in writing, Vishay products are not designed for use in medical, life-saving, or life-sustaining applications or for any other application in which the failure of the Vishay product could result in personal injury or death. Customers using or selling Vishay products not expressly indicated for use in such applications do so at their own risk. Please contact authorized Vishay personnel to obtain written terms and conditions regarding products designed for such applications.

No license, express or implied, by estoppel or otherwise, to any intellectual property rights is granted by this document or by any conduct of Vishay. Product names and markings noted herein may be trademarks of their respective owners.

© 2023 VISHAY INTERTECHNOLOGY, INC. ALL RIGHTS RESERVED