High Power Infrared Emitting Diode, 850 nm, Surface Emitter Technology

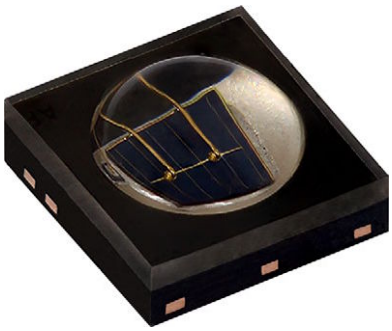

FEATURES

- Package type: surface-mount
- Package form: high power SMD with lens
- Dimensions (L x W x H in mm): 3.4 x 3.4 x 1.8
- Peak wavelength: λ_p = 850 nm
- AEC-Q102 qualified
- Angle of half intensity: φ = ± 60°
- Designed for high drive currents: up to 1.5 A (DC) and up to 5 A (pulsed)
- Low thermal resistance: 5 K/W < R_{thJSP} < 9 K/W
- ESD: up to 5 kV (according to ANSI / ESDA / JEDEC® JS-001)
- Floor life: 168 h, MSL 3, according to J-STD-020E
- Lead (Pb)-free reflow soldering
- Material categorization: for definitions of compliance please see www.vishay.com/doc?99912

AUTOMOTIVE GRADE
Pb-free
e3
RoHS COMPLIANT
HALOGEN FREE
GREEN (5-2008)

DESCRIPTION

As part of the SurfLight™ portfolio, the VSMA1085600X02 is an infrared, 850 nm emitting diode. It features a double stack emitter chip for highest radiant power. The 42 mil chip size allows 1.5 A DC operation and supports pulsed currents up to 5.0 A.

APPLICATIONS

- Driver and occupant monitoring
- Eye tracking
- Safety and security, CCTV

PRODUCT SUMMARY

COMPONENT	I_e (mW/sr) at I_F = 1.0 A	φ (°)	λ_p (nm)	$\lambda_{centroid}$ (nm)	t_r (ns)
VSMA1085600X02	510	± 60	850	845	13

Note

- Test conditions see table “Basic Characteristics”

ORDERING INFORMATION

ORDERING CODE	PACKAGING	REMARKS	PACKAGE FORM
VSMA1085600X02	Tape and reel	MOQ: 600 pcs, 600 pcs/reel	High power with lens

Note

- MOQ: minimum order quantity

For technical questions, contact: emittertechsupport@vishay.com
THIS DOCUMENT IS SUBJECT TO CHANGE WITHOUT NOTICE. THE PRODUCTS DESCRIBED HEREIN AND THIS DOCUMENT ARE SUBJECT TO SPECIFIC DISCLAIMERS, SET FORTH AT www.vishay.com/doc?91000

ABSOLUTE MAXIMUM RATINGS (T_{amb} = 25 °C, unless otherwise specified)				
PARAMETER	**TEST CONDITION**	**SYMBOL**	**VALUE**	**UNIT**
Reverse voltage		V_R	5	V
Minimum forward current		$I_{F, min.}$	100	mA
Forward current		I_F	1.5	A
Surge forward current	t_p = 100 µs	I_{FSM}	5	A
Power dissipation		P_V	5.33	W
Junction temperature		T_j	145	°C
Ambient temperature range		T_{amb}	-40 to +125	°C
Storage temperature range		T_{stg}	-40 to +125	°C
Soldering temperature	According to Fig. 11, J-STD-020E	T_{sd}	260	°C
Thermal resistance junction to solder point real [(1)]	JESD 51	$R_{thJSP,real}$	5 to 9	K/W
Thermal resistance junction to ambient real	JESD 51	$R_{thJA,real}$	80	K/W
ESD sensitivity	According to ANSI / ESDA / JEDEC JS-001	V_{ESD}	5	kV

Note

(1) Thermal resistance junction to solder point real has been measured with the part mounted on an ideal heatsink and the optical output power has been deducted from the total electrical power dissipation

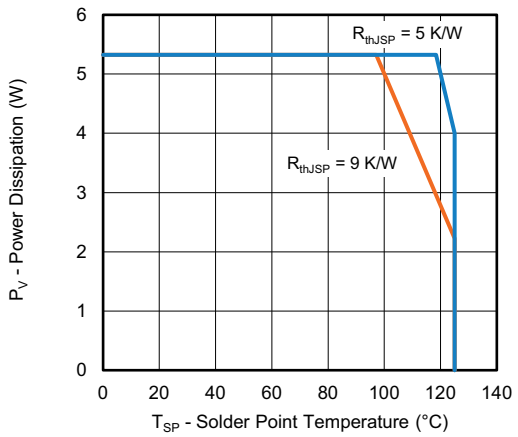

Fig. 1 - Power Dissipation Limit vs. Solder Point Temperature

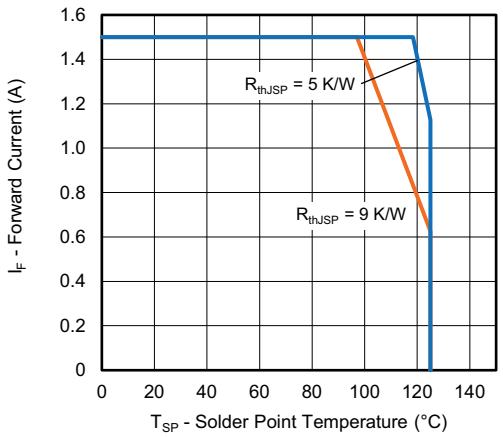

Fig. 2 - Forward Current Limit vs. Solder Point Temperature

For technical questions, contact: emittertechsupport@vishay.com
THIS DOCUMENT IS SUBJECT TO CHANGE WITHOUT NOTICE. THE PRODUCTS DESCRIBED HEREIN AND THIS DOCUMENT ARE SUBJECT TO SPECIFIC DISCLAIMERS, SET FORTH AT www.vishay.com/doc?91000

BASIC CHARACTERISTICS (T_{amb} = 25 °C, unless otherwise specified)						
PARAMETER	**TEST CONDITION**	**SYMBOL**	**MIN.**	**TYP.**	**MAX.**	**UNIT**
Forward voltage	I_F = 0.35 A, t_p = 10 ms	V_F	2.7	2.8	3.1	V
	I_F = 1 A, t_p = 100 µs	V_F	2.8	3.0	3.3	V
	I_F = 1.5 A, t_p = 100 µs	V_F	2.9	3.2	3.55	V
	I_F = 5 A, t_p = 100 µs	V_F	3.2	3.9	4.4	V
Temperature coefficient of V_F	I_F = 1 A, t_p = 100 µs		-	-2	-	mV/K
Reverse current [1]		I_R	Not designed for reverse operation			µA
Radiant intensity [2]	I_F = 0.35 A, t_p = 10 ms	I_e	130	190	235	mW/sr
	I_F = 1 A, t_p = 100 µs	I_e	360	510	630	mW/sr
	I_F = 1.5 A, t_p = 100 µs	I_e	535	750	950	mW/sr
	I_F = 5 A, t_p = 100 µs	I_e	1620	2300	2850	mW/sr
Radiant power	I_F = 1 A, t_p = 100 µs	ϕ_e	-	1450	-	mW
	I_F = 1.5 A, t_p = 100 µs	ϕ_e	-	2125	-	mW
Temperature coefficient of ϕ	I_F = 1 A, t_p = 100 µs	TK_ϕ	-	-0.15	-	%/K
Angle of half intensity		φ	-	± 60	-	°
Peak wavelength	I_F = 1 A, t_p = 100 µs	λ_p	-	850	-	nm
Centroid wavelength	I_F = 1 A, t_p = 100 µs	$\lambda_{centroid}$	-	845	-	nm
Spectral bandwidth	I_F = 1 A, t_p = 100 µs	$\Delta\lambda$	-	30	-	nm
Temperature coefficient of λ_p	I_F = 100 mA, t_p = 20 ms	$TK_{\lambda p}$	-	0.25	-	nm/K
Rise time	I_F = 1 A, R_L = 50 Ω	t_r	-	13	-	ns
Fall time	I_F = 1 A, R_L = 50 Ω	t_f	-	16	-	ns

Notes

(1) This infrared LED is designed to be operated within the specified forward current range. Continuous reverse operation must be avoided because it may damage the infrared LED.

(2) The radiant intensity values have been measured with a tolerance of ± 11 %

BASIC CHARACTERISTICS (T_{amb} = 25 °C, unless otherwise specified)

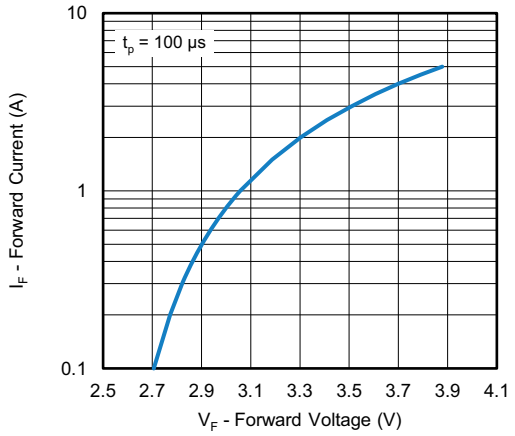

Fig. 3 - Forward Current vs. Forward Voltage

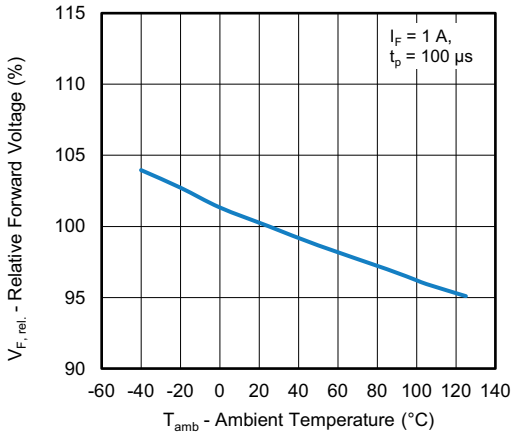

Fig. 4 - Relative Forward Voltage vs. Ambient Temperature

For technical questions, contact: emittertechsupport@vishay.com
THIS DOCUMENT IS SUBJECT TO CHANGE WITHOUT NOTICE. THE PRODUCTS DESCRIBED HEREIN AND THIS DOCUMENT ARE SUBJECT TO SPECIFIC DISCLAIMERS, SET FORTH AT www.vishay.com/doc?91000

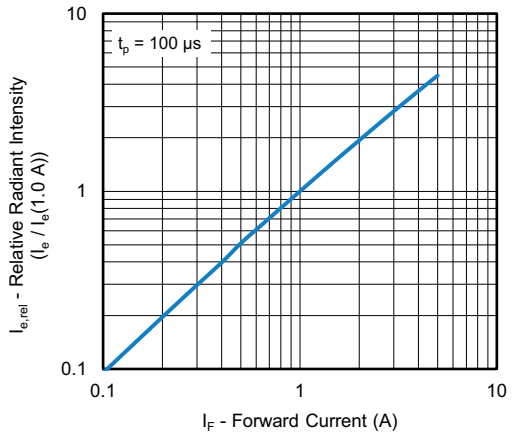

Fig. 5 - Relative Radiant Intensity vs. Forward Current

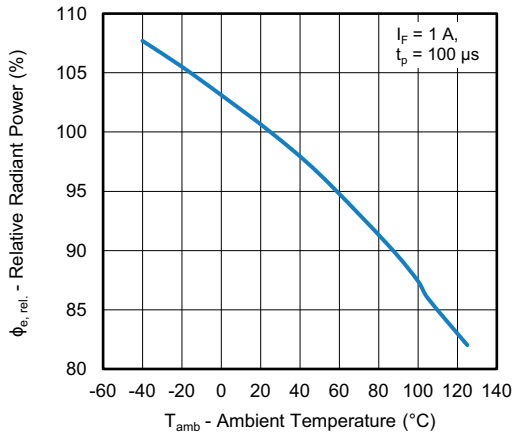

Fig. 6 - Relative Radiant Power vs. Ambient Temperature

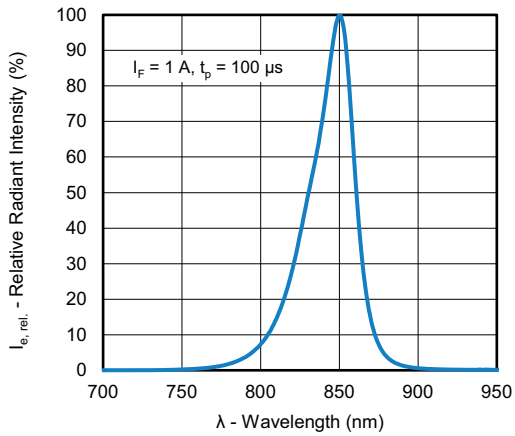

Fig. 7 - Relative Radiant Intensity vs. Wavelength

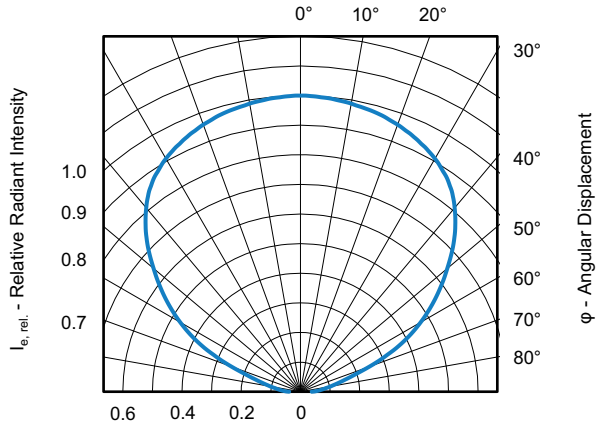

Fig. 8 - Relative Radiant Intensity vs. Angular Displacement

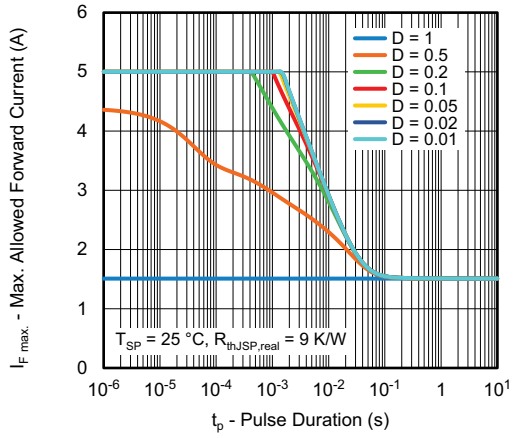

Fig. 9 - Max. Allowed Forward Current vs. Pulse Duration

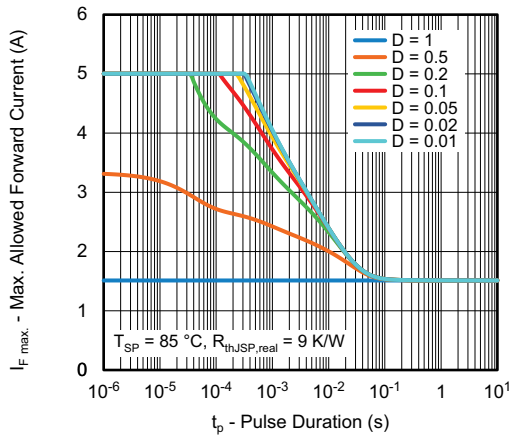

Fig. 10 - Max. Allowed Forward Current vs. Pulse Duration

For technical questions, contact: emittertechsupport@vishay.com
THIS DOCUMENT IS SUBJECT TO CHANGE WITHOUT NOTICE. THE PRODUCTS DESCRIBED HEREIN AND THIS DOCUMENT ARE SUBJECT TO SPECIFIC DISCLAIMERS, SET FORTH AT www.vishay.com/doc?91000

TAPING DIMENSIONS in millimeters

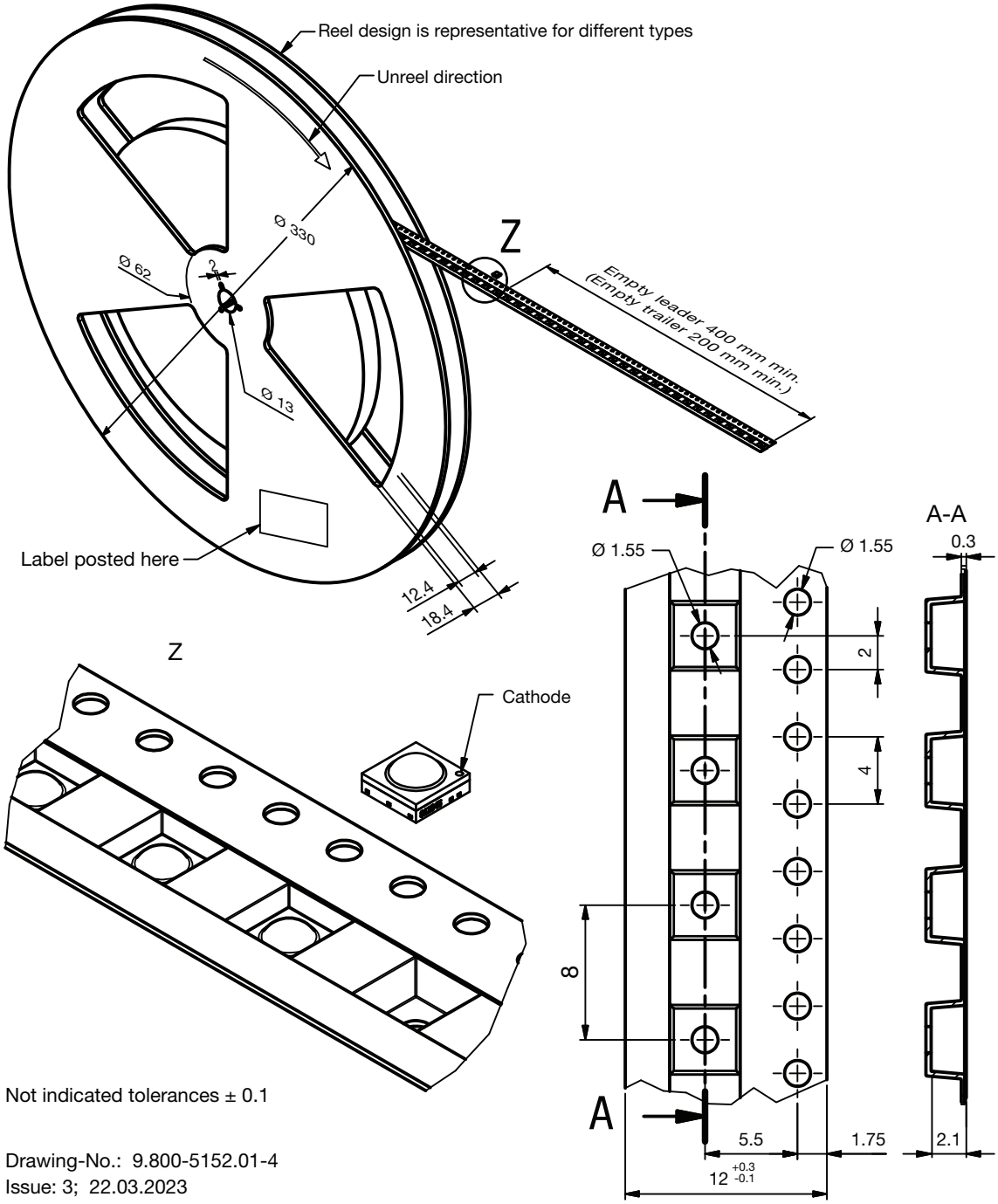

Not indicated tolerances ± 0.1

Drawing-No.: 9.800-5152.01-4
Issue: 3; 22.03.2023

Notes

- Empty component pockets sealed with top cover tape
- 7 inch reel - 600 pieces per reel
- The maximum number of consecutive missing lamps is two
- In accordance with ANSI / EIA 481-1-A-1994 specifications

For technical questions, contact: emittertechsupport@vishay.com
THIS DOCUMENT IS SUBJECT TO CHANGE WITHOUT NOTICE. THE PRODUCTS DESCRIBED HEREIN AND THIS DOCUMENT ARE SUBJECT TO SPECIFIC DISCLAIMERS, SET FORTH AT www.vishay.com/doc?91000

PACKAGE DIMENSIONS in millimeters

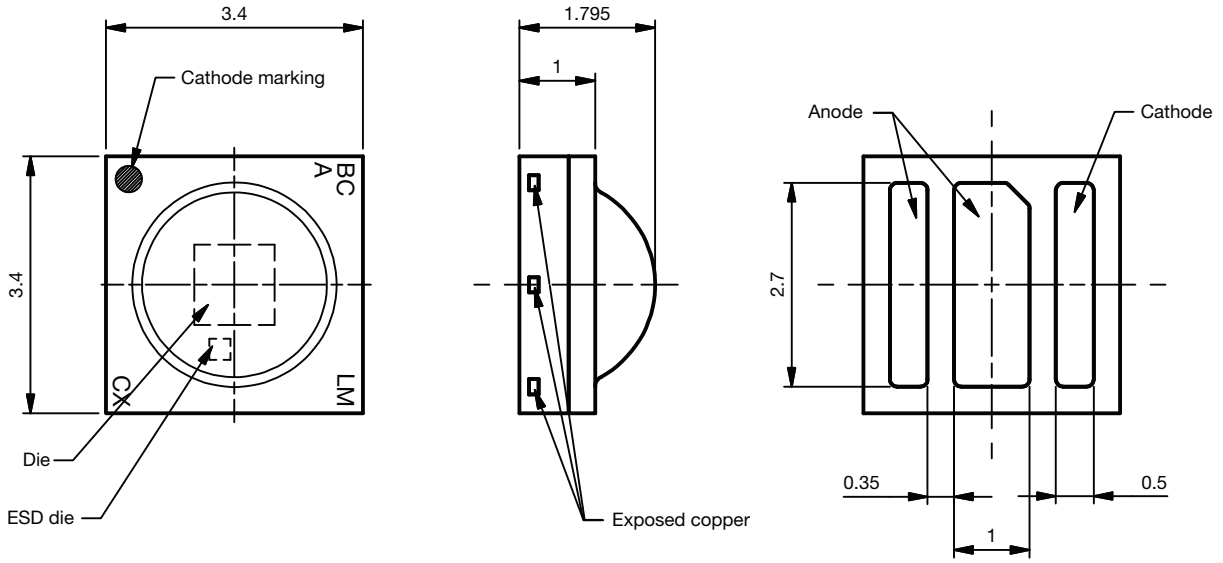

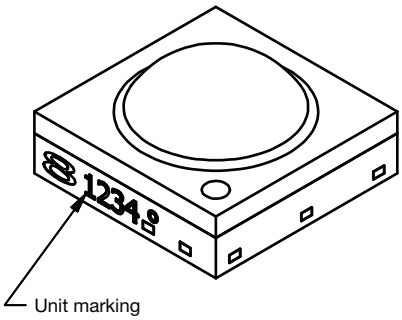

Not indicated tolerances ± 0.1

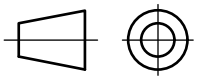

Technical drawings according to DIN specification

Drawing-No.: 6.550-5368.01-4
Issue: 2; 22.03.2023

Notes

- Tolerance is ± 0.10 mm (0.004") unless otherwise noted
- Specifications are subject to change without notice

For technical questions, contact: emittertechsupport@vishay.com
THIS DOCUMENT IS SUBJECT TO CHANGE WITHOUT NOTICE. THE PRODUCTS DESCRIBED HEREIN AND THIS DOCUMENT ARE SUBJECT TO SPECIFIC DISCLAIMERS, SET FORTH AT www.vishay.com/doc?91000

RECOMMENDED FOOTPRINT

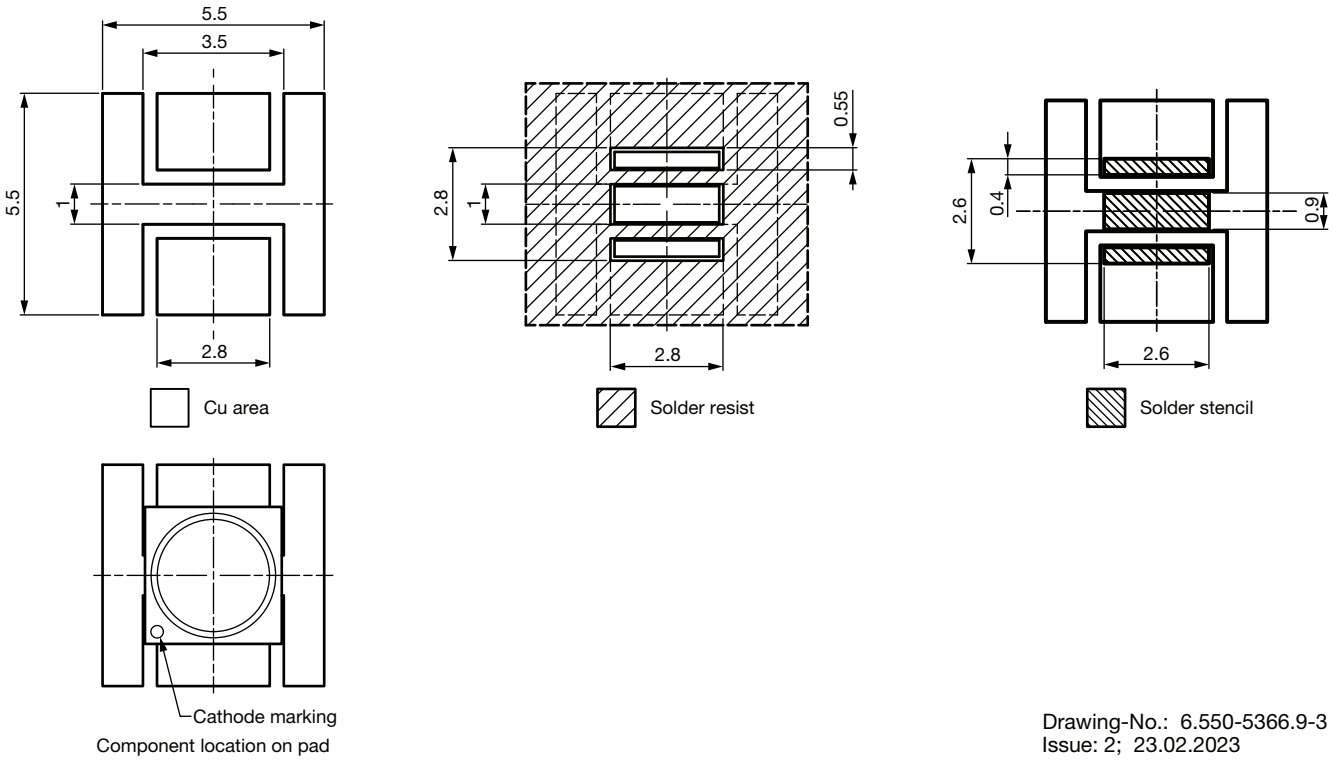

Drawing-No.: 6.550-5366.9-3
Issue: 2; 23.02.2023

SOLDER PROFILE

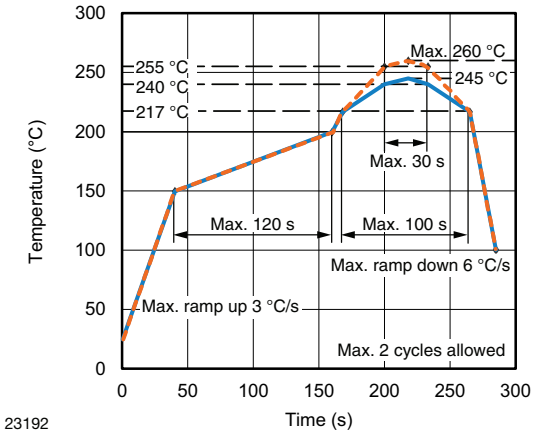

Fig. 11 - Lead (Pb)-free (Sn) Infrared Reflow Solder Profile According to J-STD-020E for Surface-Mount Components

DRYPACK

Devices are packed in moisture barrier bags (MBB) to prevent the products from moisture absorption during transportation and storage. Each bag contains a desiccant.

FLOOR LIFE

Floor life (time between soldering and removing from MBB) must not exceed the time indicated on MBB label:

Floor life: 168 h

Conditions: T_{amb} < 30 °C, RH < 60 %

Moisture sensitivity level 3, according to J-STD-020E

DRYING

In case of moisture absorption devices should be baked before soldering. Conditions see J-STD-033D or label. Devices taped on reel dry using recommended conditions 192 h at 40 °C (+ 5 °C), RH < 5 %.

For technical questions, contact: emittertechsupport@vishay.com
THIS DOCUMENT IS SUBJECT TO CHANGE WITHOUT NOTICE. THE PRODUCTS DESCRIBED HEREIN AND THIS DOCUMENT ARE SUBJECT TO SPECIFIC DISCLAIMERS, SET FORTH AT www.vishay.com/doc?91000

Disclaimer

ALL PRODUCT, PRODUCT SPECIFICATIONS AND DATA ARE SUBJECT TO CHANGE WITHOUT NOTICE TO IMPROVE RELIABILITY, FUNCTION OR DESIGN OR OTHERWISE.

Vishay Intertechnology, Inc., its affiliates, agents, and employees, and all persons acting on its or their behalf (collectively, “Vishay”), disclaim any and all liability for any errors, inaccuracies or incompleteness contained in any datasheet or in any other disclosure relating to any product.

Vishay makes no warranty, representation or guarantee regarding the suitability of the products for any particular purpose or the continuing production of any product. To the maximum extent permitted by applicable law, Vishay disclaims (i) any and all liability arising out of the application or use of any product, (ii) any and all liability, including without limitation special, consequential or incidental damages, and (iii) any and all implied warranties, including warranties of fitness for particular purpose, non-infringement and merchantability.

Statements regarding the suitability of products for certain types of applications are based on Vishay's knowledge of typical requirements that are often placed on Vishay products in generic applications. Such statements are not binding statements about the suitability of products for a particular application. It is the customer's responsibility to validate that a particular product with the properties described in the product specification is suitable for use in a particular application. Parameters provided in datasheets and / or specifications may vary in different applications and performance may vary over time. All operating parameters, including typical parameters, must be validated for each customer application by the customer's technical experts. Product specifications do not expand or otherwise modify Vishay's terms and conditions of purchase, including but not limited to the warranty expressed therein.

Hyperlinks included in this datasheet may direct users to third-party websites. These links are provided as a convenience and for informational purposes only. Inclusion of these hyperlinks does not constitute an endorsement or an approval by Vishay of any of the products, services or opinions of the corporation, organization or individual associated with the third-party website. Vishay disclaims any and all liability and bears no responsibility for the accuracy, legality or content of the third-party website or for that of subsequent links.

Except as expressly indicated in writing, Vishay products are not designed for use in medical, life-saving, or life-sustaining applications or for any other application in which the failure of the Vishay product could result in personal injury or death. Customers using or selling Vishay products not expressly indicated for use in such applications do so at their own risk. Please contact authorized Vishay personnel to obtain written terms and conditions regarding products designed for such applications.

No license, express or implied, by estoppel or otherwise, to any intellectual property rights is granted by this document or by any conduct of Vishay. Product names and markings noted herein may be trademarks of their respective owners.

© 2023 VISHAY INTERTECHNOLOGY, INC. ALL RIGHTS RESERVED