4.5 V to 20 V Input, 12 A microBuck® DC/DC Converter With PMBus Interface

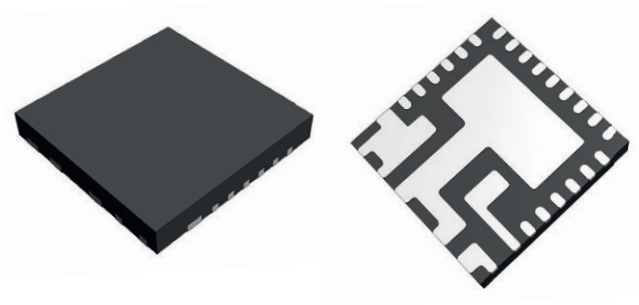

LINKS TO ADDITIONAL RESOURCES

PowerCAD Design Tool | Evaluation Boards | Design Tools

DESCRIPTION

The SiC454 is a PMBus 1.3 compliant non-isolated DC/DC buck regulator with integrated MOSFETs. It is capable of supplying up to 12 A continuous output current. Its output voltage is digitally adjustable from 0.3 V to 12 V from a 4.5 V to 20 V input with switching frequencies up to 1.5 MHz.

SiC454 architecture delivers ultrafast transient response with minimum output capacitance and tight regulation over a broad load range. The device has integrated internal compensation and is stable with any type of output capacitor. The device incorporates a power saving scheme that significantly increases light load efficiency.

The SiC454 allows power block configuration programs to be stored in non volatile memory (NVM). Various operation parameters can all be locally stored and used to determine fault behavior. Operation is firmware based and is field upgradable Pinstrap option is also available for default configuration without PMBus.

The SiC454 is available in lead (Pb)-free power enhanced MLP 5 mm x 5 mm package.

TYPICAL APPLICATION CIRCUIT

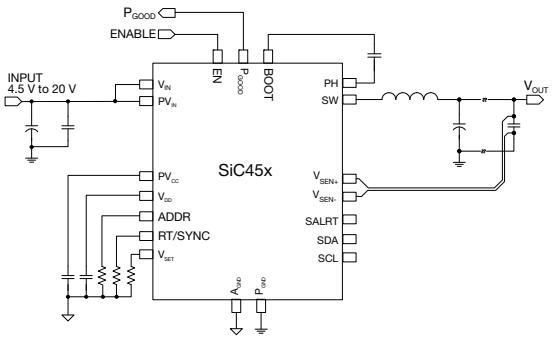

Fig. 1 - Typical Application Circuit

FEATURES

- Versatile
  - Single supply operation from 4.5 V to 20 V input voltage
  - Adjustable output voltage from 0.3 V to 12 V
  - Built in 5 V regulator for internal circuits and driver supply
  - 1 % output voltage accuracy over temperature
  - Ultrafast transient response
- Highly efficient
  - 98 % peak efficiency
  - Optional power save mode
- Highly configurable
  - PMBus 1.3 compliant with 1 MHz bus speed
  - Internal NVM
  - V_{OUT} adjustability and reading resolution of 2 mV
  - Supports over 50 PMBus commands
  - Supports in phase or 180° out of phase synchronization
  - Output voltage source and sink capability
- Robust and reliable
- PV_{IN}, V_{OUT}, I_{IN} and I_{OUT} and temperature reporting
  - Over current protection in pulse-by-pulse mode
  - Output over and under voltage protection
  - Over temperature protection with hysteresis
  - Differential output remote sensing

RoHS COMPLIANT HALOGEN FREE

APPLICATIONS

- Server, cloud, and infrastructure
- Networking, telecom, storage applications
- Distributed point of load power architectures
- DDR memory

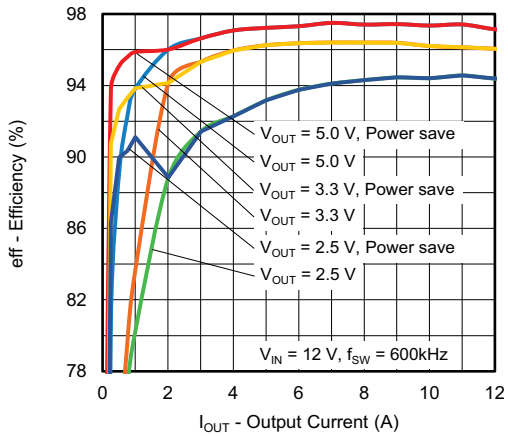

Fig. 2 - SiC454 Efficiency Curve

For technical questions, contact: powerictechsupport@vishay.com

THIS DOCUMENT IS SUBJECT TO CHANGE WITHOUT NOTICE. THE PRODUCTS DESCRIBED HEREIN AND THIS DOCUMENT ARE SUBJECT TO SPECIFIC DISCLAIMERS, SET FORTH AT www.vishay.com/doc?91000

PIN CONFIGURATION

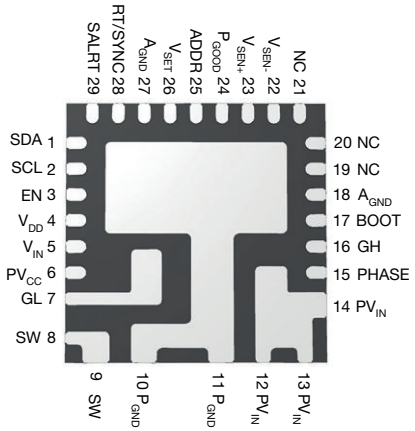

Fig. 3 - Pin Configuration - Top View

PIN DESCRIPTION		
PIN NUMBER	**SYMBOL**	**DESCRIPTION**
1	SDA	PMBus data. Connect to external host interface
2	SCL	PMBus clock. Connect to external host interface
3	EN	Enable pin. Active high 5 V logic level input
4	V_{DD}	Internal 5 V circuits supply voltage. VDD is a LDO output, connect a 1 µF to 4.7 µF decoupling capacitor to AGND
5	V_{IN}	Input of internal LDO. Connect to the input of power train with a 0.1 µF MLCC decoupling capacitor to AGND
6	PVCC	Supply voltage for internal gate drive. PVCC is a LDO output. Connect a 4.7 µF decoupling capacitor to PGND
7	GL	Low side MOSFET gate monitor
8, 9	SW	Switch node
10, 11	PGND	Power ground. Common return for internal MOSFETs
12, 13, 14	PVIN	Input voltage for power stage
15	PHASE	Phase node, return path of high side gate driver
16	GH	High side MOSFET gate monitor
17	BOOT	Bootstrap voltage for high side gate driver (referenced to PHASE)
18	AGND	Analog signal return ground
19, 20, 21	NC	Not internally connected. Leave it floating
22	VSEN-	Negative input of remote sense amplifier. Connect to output ground
23	VSEN+	Positive input of remote sense amplifier. Connect to output
24	PGOOD	Power good. Open-drain output indicating VOUT is within set limits. Connect a pull up resistor typically 10 kohm to VDD
25	ADDR	PMBus address programming pin
26	VSET	Output voltage set point by connecting a resistor from VSET to AGND
27	AGND	Analog signal return ground
28	RT/SYNC	Clock synchronization pin. Frequency can be set by connecting a resistor to AGND. Depending on master / salve configuration, a clock can be send / receive via the pin
29	SALRT	PMBus alert. Connect to external host interface if desired

ORDERING INFORMATION			
PART NUMBER	**PART MARKING**	**MAXIMUM CURRENT**	**PACKAGE**
SiC454ED-T1-GE3	SiC454	12 A	PowerPAK MLP29-55
SiC454EVB	Reference board		

For technical questions, contact: powerictechsupport@vishay.com
THIS DOCUMENT IS SUBJECT TO CHANGE WITHOUT NOTICE. THE PRODUCTS DESCRIBED HEREIN AND THIS DOCUMENT ARE SUBJECT TO SPECIFIC DISCLAIMERS, SET FORTH AT www.vishay.com/doc?91000

PART MARKING INFORMATION

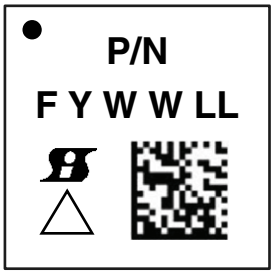

● = pin 1 indicator
P/N = part number code
= Siliconix logo
△ = ESD symbol
F = assembly factory code
Y = year code
WW = week code
LL = lot code

ABSOLUTE MAXIMUM RATINGS (T_A = 25 °C, unless otherwise noted)			
ELECTRICAL PARAMETER	**CONDITIONS**	**LIMITS**	**UNIT**
PV_{IN}, V_{IN}	Reference to P_{GND}	-0.3 to +28	V
SW / PH	Reference to P_{GND}	-0.3 to +28	
SW / PH (AC)	Reference to P_{GND} (100 ns)	-8 to +33	
BOOT		-0.3 to V_{PH} + P_{VCC}	
BOOT to SW		-0.3 to +6	
Drive supply voltage (PV_{CC})		-0.3 to +6	
Bias supply voltage (V_{DD})		-0.3 to +6	
A_{GND} to P_{GND}		-0.3 to +0.3	
All other pins	Reference to A_{GND}	-0.3 to V_{DD} + 0.3	
Temperature			
Junction temperature		-40 to +150	°C
Storage temperature		-65 to +150	
Power Dissipation			
Junction-to-ambient thermal impedance (R_{thJA})		24	°C/W
Thermal resistance from junction to case (R_{thJ-C})		4.5	
Thermal resistance from junction to PCB ($R_{thJ-PCB}$)		5	
ESD Protection			
Electrostatic discharge protection	HBM	2	kV
	CDM	750	V

Stresses beyond those listed under "Absolute Maximum Ratings" may cause permanent damage to the device. These are stress ratings only, and functional operation of the device at these or any other conditions beyond those indicated in the operational sections of the specifications is not implied. Exposure to absolute maximum rating / conditions for extended periods may affect device reliability.

RECOMMENDED OPERATING CONDITIONS (all voltages referenced to GND = 0 V)				
ELECTRICAL PARAMETER	**MIN.**	**TYP.**	**MAX.**	**UNIT**
PV_{IN}, V_{IN}	4.5	-	20	V
Logic pins	0	-	5.5	
V_{OUT}	0.3	-	12	
Drive supply voltage (P_{VCC})	4.75	5	5.25	
Bias supply voltage (V_{DD})	4.75	5	5.25	
Temperature				
Recommended ambient temperature	-40 to +85			°C
Operating junction temperature	-40 to +125			

For technical questions, contact: powerictechsupport@vishay.com
THIS DOCUMENT IS SUBJECT TO CHANGE WITHOUT NOTICE. THE PRODUCTS DESCRIBED HEREIN AND THIS DOCUMENT ARE SUBJECT TO SPECIFIC DISCLAIMERS, SET FORTH AT www.vishay.com/doc?91000

ELECTRICAL SPECIFICATIONS (PV_{IN} = 12 V, T_J = -40 °C to +125 °C, unless otherwise specified)						
PARAMETER	**SYMBOL**	**TEST CONDITIONS**	**LIMITS**			**UNIT**
			MIN.	**TYP.**	**MAX.**	
Power Supplies						
PV_{IN}, V_{IN}	PV_{IN}, V_{IN}		4.5	-	20	V
$V_{IN_ON, default}$	V_{IN_ON}	Default setting	-	10	-	
$V_{IN_OFF, default}$	V_{IN_OFF}	Default setting	-	9	-	
PV_{CC} supply	V_{PVCC}	V_{IN} = 4.5 V to 20 V	4.5	5	5.5	
V_{DD} supply	V_{DD}	Logic supply voltage	4.5	5	5.5	
PV_{CC} UVLO threshold	$V_{PVCC_UVLO_TH}$		3.4	3.6	3.8	
PV_{CC} UVLO hysteresis	$V_{PVCC_UVLO_HYS}$		-	300	-	mV
Input current	I_{VIN}	T_J = 25 °C, non-switching, no load, $V_{OUT} > V_{SET}$, $I_{PVCC} + I_{PVDD} + I_{PVIN}$	-	3.5	6	mA
Shutdown current	I_{VIN_SDN}	EN = 0 V, $I_{PVCC} + I_{PVDD} + I_{PVIN}$	-	2.5	6	
PV_{IN} Monitoring						
PV_{IN} monitor accuracy	$V_{PVIN_MON_ACC}$		-	3	-	%
PV_{IN} min. monitor resolution	$V_{PVIN_MON_RSO}$		-	70	-	mV
PV_{IN} monitor full scale	$V_{PVIN_MON_SCL}$		-	-	28	V
PV_{IN} read frequency	t_{PVIN_RSP}		-	78	-	Hz
I_{IN} Fault Response Time						
I_{IN} fault response time	t_{IIN_RSP}	$I_{IN_OC_WARN}$	-	78	-	Hz
Pin (Input power)						
Pin sense accuracy	$P_{PVIN_SNS_ACC}$	5 W to 160 W	-	5	-	%
Pin sense resolution	$P_{PVIN_SNS_RSO}$		-	0.5	-	W
Output Voltage						
V_{OUT} default set-point	V_{OUT}	V_{SET} resistor = OPEN or SHORT	-	0.6	-	V
V_{OUT} set-point accuracy	V_{OUT_ACC}	Measured as ΔV ($V_{SEN+} - V_{SEN-}$)	-1	-	1	%
V_{OUT} set-point range	V_{OUT_RNG}		0.3	-	12	V
V_{OUT} set-point resolution	V_{OUT_RSO}		-	2	-	mV
Line regulation	V_{OUT_REG}		-	1	-	%
Load regulation	V_{OUT_REG}		-	1	-	
V_{OUT} min. monitor resolution	$V_{OUT_MON_RSO}$	V_{OUT} scale loop = 1	-	5	-	mV
V_{OUT} start up delay range	$t_{S_DLY_RNG}$	From PV_{IN} valid until 1st PWM pulse	-	0	-	ms
V_{SEN+} common mode range	V_{VSNS_RNG}		-0.2	-	12	V
V_{SEN-} common mode range	V_{VSNS_RNG}		-200	-	200	mV
V_{OUT} read conversion frequency	t_{VOUT_RSP}		-	78	-	Hz
Controller and Timing						
Minimum on-time	t_{ON_MIN}		-	50	-	ns
Minimum off-time	t_{OFF_MIN}		-	250	-	
t_{ON} accuracy	t_{ON_ACC}		-10	-	10	%
Frequency, default	f_{SW}		540	600	660	kHz
Frequency setting range	f_{SW_RNG}	CCM mode	300	-	1500	
V_{OUT} Soft Start / Soft Stop						
t_{ON} rise, default	t_{ON_RISE}	From V_{OUT} = 0 V to V_{OUT} set point	-	5	-	ms
t_{ON} rise, setting range	t_{ON_RNG}		0	-	127	
t_{OFF} fall, default	t_{SSP}		-	5	-	
t_{OFF} fall, setting range	$t_{SSP,RNG}$		0	-	127	
t_{ON} delay, default	t_{ON_DLY}	From V_{OUT} = 0 V to V_{OUT} set point	-	0	-	
t_{ON} delay, setting range	$t_{ON_DLY,RNG}$		0	-	127	
t_{OFF} delay, default	t_{OFF_DLY}		-	0	-	
t_{OFF} delay, setting range	$t_{OFF_DLY,RNG}$		0	-	127	
t_{ON} max. fault limit, default	t_{max_FLT}		-	20	-	
t_{ON} max. fault limit, setting range	$t_{max_FLT,RNG}$		0	-	127	

For technical questions, contact: powerictechsupport@vishay.com
THIS DOCUMENT IS SUBJECT TO CHANGE WITHOUT NOTICE. THE PRODUCTS DESCRIBED HEREIN AND THIS DOCUMENT ARE SUBJECT TO SPECIFIC DISCLAIMERS, SET FORTH AT www.vishay.com/doc?91000

ELECTRICAL SPECIFICATIONS (PV_{IN} = 12 V, T_J = -40 °C to +125 °C, unless otherwise specified)						
PARAMETER	**SYMBOL**	**TEST CONDITIONS**	**LIMITS**			**UNIT**
			MIN.	**TYP.**	**MAX.**	
Enable						
EN pull down resistance	R_{EN}		-	5	-	MΩ
RT/SYNC						
Logic high level	$V_{RT/SYNC_HI}$		2	-	-	V
Logic low level	$V_{RT/SYNC_LO}$		-	-	0.8	
Input minimum pulse width	$t_{IN\ Pulse_min}$		-	100	-	ns
Sync switching	F_{SYNC}		300	-	1500	kHz
Power Good						
Power good output rising threshold	$V_{FB_RISING_TH}$	Default value respect to V_{OUT} default setting = 0.6 V	-	90	-	%
Power good output falling threshold	$V_{FB_FALLING_TH}$		-	85	-	
Power good hysteresis	V_{FB_HYST}		-	5	-	
Power good on resistance	R_{PG}		-	5.5	-	Ω
Power good delay time (rising)	$t_{PG_RISE_DLY}$		-	25	-	µs
Power good delay time (falling)	$t_{PG_FALL_DLY}$		-	100	-	
Temperature Monitor and Temperature Shutdown						
Monitoring resolution	T_{MON_RSO}		-	1	-	°C
Monitoring range	T_{MON_RNG}		-40	-	+150	
Monitoring accuracy	T_{MON_ACC}		-5	-	+5	
Thermal shutdown	T_{SD}		-	125	-	
Thermal shutdown hysteresis	T_{SD_HYS}		-	35	-	
Digital Inputs (ADDR, SALRT, SCLK, SDA, EN)						
Input high threshold	V_{IH}		2	-	-	V
Input low threshold	V_{IL}		-	-	0.8	
Input hysteresis	V_{HYST}		-	0.1	-	
Pin capacitance	C_{PIN}		-	5	-	pF
Fault Protections						
Valley current limit, default	I_{OCP}	SiC454, T_J = -40 °C to +85 °C	-	17	-	A
Output OVP threshold, default	V_{OVP}	V_{OUT} with respect to V_{SET}	-	115	-	%
Output UVP threshold, default	V_{UVP}		-	80	-	
Telemetry						
V_{IN}	V_{IN}	Load current, 20 % to 100 % (T_A = -40 °C to +125 °C)	-3	-	3	%
I_{IN}	I_{IN}	20 % of load current (T_A = 25 °C)	-15	-	15	
		50 % of load current (T_A = 25 °C)	-6	-	6	
		100 % of load current (T_A = 25 °C)	-5	-	5	
P_{IN}	P_{IN}	20 % of load current (T_A = 25 °C)	-9	-	9	
		50 % of load current (T_A = 25 °C)	-4	-	4	
		100 % of load current (T_A = 25 °C)	-3	-	3	
V_{OUT}	V_{OUT}	2 V < V_{OUT} < 5.5 V, load current, 20 % to 100 % (T_A = -40 °C to +125 °C)	-6	-	6	
		0.5 V < V_{OUT} < 2 V, load current, 20 % to 100 % (T_A = -40 °C to +125 °C)	-7	-	7	
I_{OUT}	I_{OUT}	20 % of load current (T_A = 25 °C)	-12	-	12	
		50 % of load current (T_A = 25 °C)	-4	-	4	
		100 % of load current (T_A = 25 °C)	-3	-	3	
P_{OUT}	P_{OUT}	20 % of load current (T_A = 25 °C)	-9	-	9	
		50 % of load current (T_A = 25 °C)	-4	-	4	
		100 % of load current (T_A = 25 °C)	-3	-	3	

For technical questions, contact: powerictechsupport@vishay.com
THIS DOCUMENT IS SUBJECT TO CHANGE WITHOUT NOTICE. THE PRODUCTS DESCRIBED HEREIN AND THIS DOCUMENT ARE SUBJECT TO SPECIFIC DISCLAIMERS, SET FORTH AT www.vishay.com/doc?91000

FUNCTIONAL BLOCK DIAGRAM

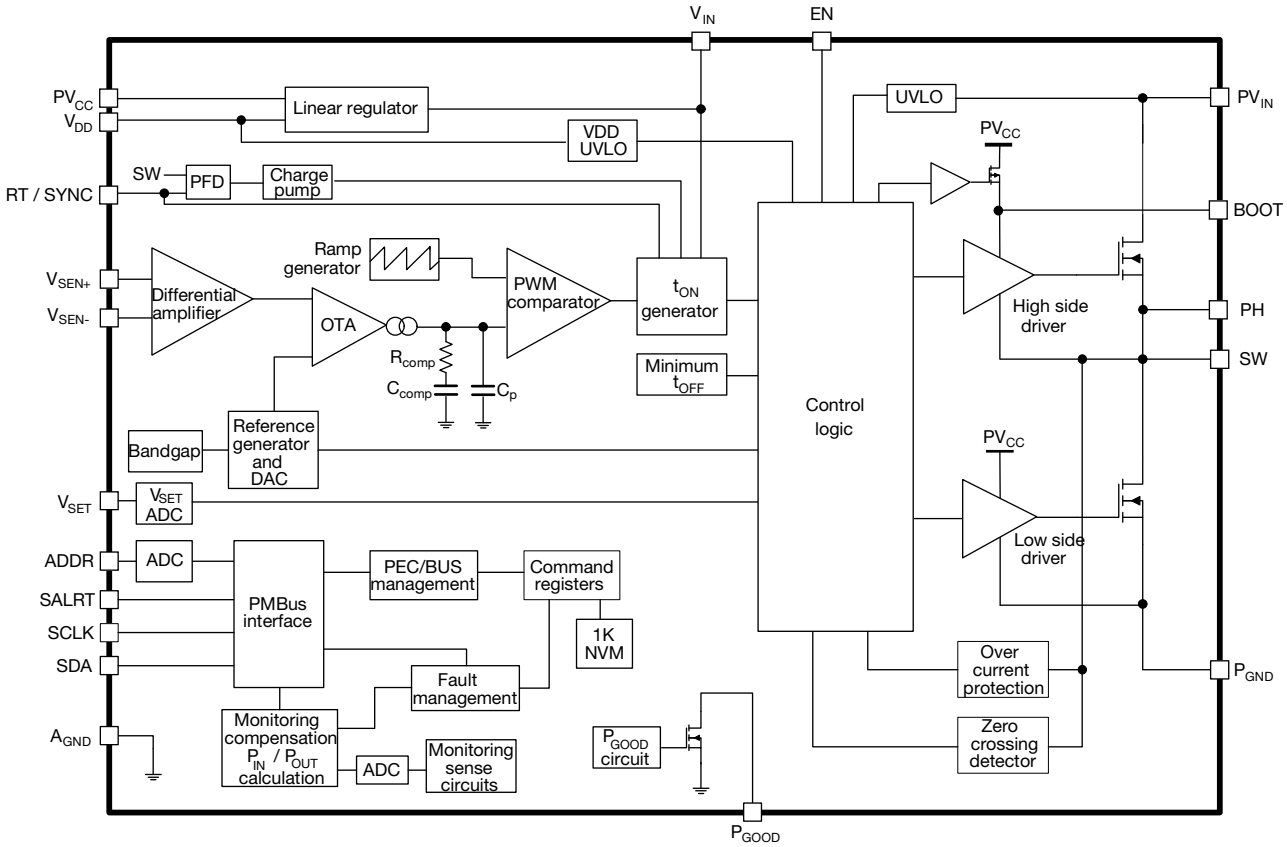

Fig. 4 - Functional Block Diagram

For technical questions, contact: powerictechsupport@vishay.com
THIS DOCUMENT IS SUBJECT TO CHANGE WITHOUT NOTICE. THE PRODUCTS DESCRIBED HEREIN AND THIS DOCUMENT ARE SUBJECT TO SPECIFIC DISCLAIMERS, SET FORTH AT www.vishay.com/doc?91000

OPERATIONAL DESCRIPTION

Device Overview

SiC454 is a high efficiency synchronous buck regulator capable of delivering up to 25 A continuous current. The device has programmable switching frequency of 300 kHz to 1.5 MHz. The control scheme delivers fast transient response and minimizes external components. Thanks to the internal current ramp information, no high ESR output bulk or virtual ESR network is required for the loop stability. This device also incorporates a power saving feature by enabling diode emulation mode and frequency fold back as the load decreases.

In addition, a built in PLL allows in phase or 180° out of phase synchronization under master / slave configuration.

SiC454 has a full set of protection and monitoring features with response that can be set with PMBus:

- Over current protection in pulse-by-pulse mode
- Output over voltage protection
- Output under voltage protection
- Over temperature protection with hysteresis
- Dedicated enable pin for easy power sequencing
- Power good open drain output

This device is available in MLP34-57 package to deliver high power density and minimize PCB area.

PWM Control Mechanism

SiC454 employs a voltage - mode COT control mechanism. During steady-state operation, feedback voltage is compared with internal reference and the amplified error signal (V_{COMP}) is generated in the internal comp node. An internally generated ramp signal and V_{COMP} are fed into a comparator. Once V_{RAMP} crosses V_{COMP}, a single shot on-time pulse is generated for a fixed time, programmed by the external R_{fsw}. During the on-time pulse, the high side MOSFET will be turned on. Once the on-time pulse expires, the low side MOSFET will be turned on after a break-before-make period. The low side MOSFET will be on for duration of minimum off-time pulse until V_{RAMP} crosses V_{COMP}. The cycle is then repeated.

Fig. 5 illustrates the basic block diagram for VM-COT architecture. In this architecture the following is achieved:

- The reference of a basic ripple control regulator is replaced with a high again error amplifier loop
- This establishes two parallel voltage regulating feedback paths, a fast and slow path
- Fast path is the ripple injection which ensures rapid correction of the transient perturbation
- Slow path is the error amplifier loop which ensures the DC component of the output voltage follows the internal accurate reference voltage

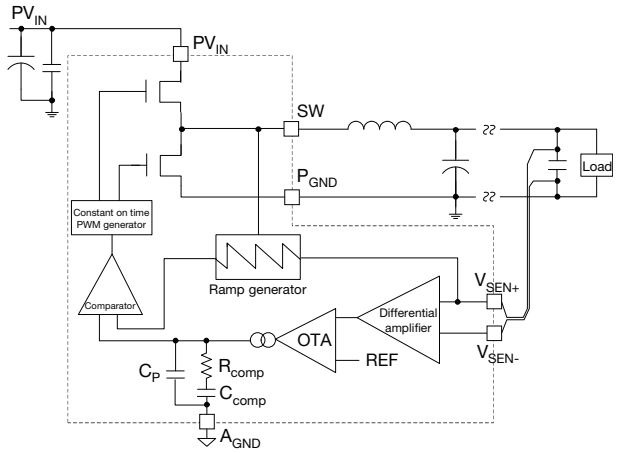

Fig. 5 - VM-COT Block Diagram

All components for RAMP signal generation and error amplifier compensation required for the control loop are internal to the IC, see Fig. 5. In order for the device to cover a wide range of V_{OUT} operation, the internal RAMP signal components are automatically selected depending on the V_{OUT} voltage and switching frequency. The error amplifier internal compensation consists of a resistor in series with a capacitor (R_{COMP}, C_{COMP}).

Fig. 6 demonstrates the basic operational waveforms:

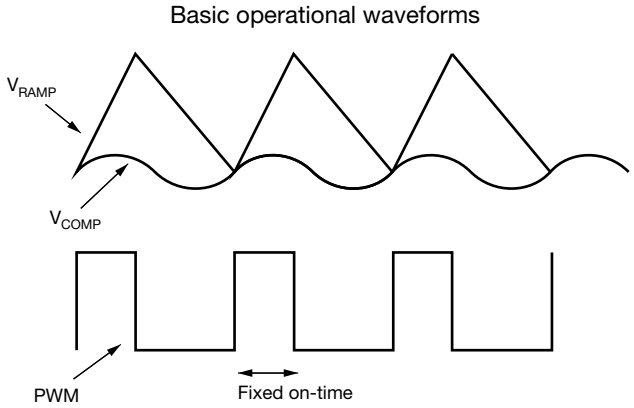

Fig. 6 - VM-COT Operational Principle

Light Load Condition

To improve efficiency at light-load condition, SiC454 provide a set of innovative implementations to eliminate LS recirculating current and switching losses. The internal zero crossing detector monitors SW node voltage to determine when inductor current starts to flow negatively. In power saving mode, as soon as inductor valley current crosses zero, the device deploys diode emulation mode by turning off low side MOSFET. If load further decreases, switching frequency is reduced proportional to load condition to save switching losses while keeping output ripple within tolerance. The switching frequency is set by the controller to

For technical questions, contact: powerictechsupport@vishay.com
THIS DOCUMENT IS SUBJECT TO CHANGE WITHOUT NOTICE. THE PRODUCTS DESCRIBED HEREIN AND THIS DOCUMENT ARE SUBJECT TO SPECIFIC DISCLAIMERS, SET FORTH AT www.vishay.com/doc?91000

maintain regulation. In the standard power save mode, there is no minimum switching frequency. If ultrasonic mode is selected via PMBus, the minimum switching frequency that the regulator will reduce to is > 20 kHz as the part avoids switching frequencies in the audible range.

Power Stage

SiC454 integrates a high performance power stage with a 4 mΩ n-channel high side MOSFET and a 1.4 mΩ n-channel low side MOSFET. The MOSFETs are optimized to achieve up to 96 % efficiency.

The power input voltage (PV_{IN}) can go up to 20 V and down as low as 4.5 V. The output voltage must always be less than the input voltage.

Sequencing of Input / Output Supplies

SiC454 has no sequencing requirements on any of its input / output, PV_{IN}, PV_{CC}, V_{IN}, V_{DD} and EN. V_{IN} is internal supply voltage and is used to implement on time of COT control. V_{IN} shall be directly connected to PV_{IN}.

EN

The SiC454 has an EN pin to turn the part on and off. Driving this pin high enables the device, while grounding it turns it off.

There are no sequencing requirements with respect to input / output supplies.

Output Overcurrent Protection (OCP)

SiC454 has pulse-by-pulse overcurrent (OC) limit control. The inductor valley current is monitored during low-side (LS) FET turn-on period through $R_{DS(on)}$ sensing. After a pre-defined blanking time, the valley current is compared with an internal OCP threshold named IOUT_OC_FAULT_LIMIT, which can be programmed via PMBus. Once monitored valley current is larger than IOUT_OC_FAULT_LIMIT, a pulse-by-pulse over-current limit is broken, high-side (HS) turn-on pulse is skipped and LS FET is kept on until the inductor valley current returns below OCP limit as illustrated by Fig. 7.

An equation is given in (1) to calculate IOUT_OC_FAULT_LIMIT from steady-state value of DC load current when OCP happens.

$$\text{IOUT_OC_FAULT_LIMIT} = I_{OUT_OCP} - \frac{(PV_{IN} - V_{OUT}) \times V_{OUT}}{2 \times L \times PV_{IN} \times f_{SW}} \quad (1)$$

where: IOUT_OC_FAULT_LIMIT is the OCP threshold to be programmed via PMBus; I_{OUT_OCP} is the steady-state value of DC load current when pulse-by-pulse OC event happens; PV_{IN} is the input voltage for power stage; V_{OUT} is the output voltage for power stage; L is inductance of power inductor; and f_{SW} is switching frequency for power stage.

SiC454 also provides secondary level OCP protection. If the pulse-by-pulse overcurrent limit is persistently broken for more than a specific number of consecutive switching pulses in a row, secondary level OC fault is recognized and both HS and LS MOSFETs are turned off. The device continues restart attempt in a delay time until the OC fault condition no longer exists.

The consecutive switching pulse in a row, the delay time, and other types of fault responses can be programmed via PMBus (see PMBus command section). The default number is 128 for counting consecutive switching pulse in a row. The default delay time is 20 ms.

The OCP is enabled immediately after V_{DD} passes UVLO level.

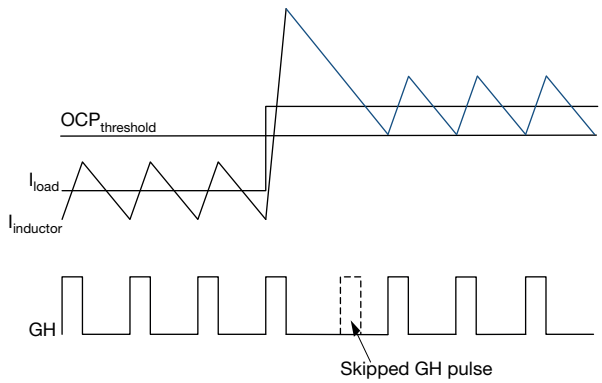

Fig. 7 - Over-Current Protection Illustration

Output Undervoltage Protection (UVP)

UVP is implemented by monitoring the output voltage. If the output voltage drops below a threshold voltage $V_{OUT_UV_FAULT_LIMIT}$ (V_{UFL}), the output-undervoltage (UV) fault condition is recognized and both the HS and LS MOSFETs are turned off. The device continues restart attempt in a delay time until the UV condition no longer exists.

The V_{UFL} and the delay time can be programmed via PMBus (see PMBus command section). The default value of V_{UFL} is 20 % less than the target V_{OUT}. The default delay time is 20 ms.

The UVP is only active after the completion of soft-start sequence.

Output-Overvoltage Protection (OVP)

OVP is implemented by monitoring the output voltage. If the output voltage is above a threshold voltage $V_{OUT_OV_FAULT_LIMIT}$ (V_{OFL}), the output-overvoltage (OV) fault condition is recognized and both the HS and LS MOSFETs are turned off. The device restarts when the OV fault condition no longer exists.

The UVFL can be programmed via PMBus (see PMBus command section). The default value of V_{OFL} is 15 % more than the target V_{OUT}.

The OVP is enabled immediately after V_{DD} passes UVLO level.

Input-Overvoltage Protection ($V_{IN\text{-}OVP}$)

$V_{IN\text{-}OVP}$ is implemented by monitoring the input voltage.

For technical questions, contact: powerictechsupport@vishay.com
THIS DOCUMENT IS SUBJECT TO CHANGE WITHOUT NOTICE. THE PRODUCTS DESCRIBED HEREIN AND THIS DOCUMENT ARE SUBJECT TO SPECIFIC DISCLAIMERS, SET FORTH AT www.vishay.com/doc?91000

When the input voltage is pulled above a threshold voltage $V_{IN_OV_FAULT_LIMIT}$ ($V_{IN\text{-}OFL}$), the input-overvoltage ($V_{IN\text{-}OV}$) fault condition is recognized and both the HS and LS MOSFETs are turned off. When the input voltage is pulled below the $V_{IN\text{-}OFL}$, the $V_{IN\text{-}OV}$ fault condition no longer exists and the device restarts.

The $V_{IN\text{-}OFL}$ can be programmed via PMBus (see PMBus command section). The default value of $V_{IN\text{-}OFL}$ is 15 V.

The $V_{IN\text{-}OVP}$ is enabled immediately after V_{DD} passes UVLO level.

Input-Undervoltage Protection ($V_{IN\text{-}UVP}$)

$V_{IN\text{-}UVP}$ is implemented by monitoring the input voltage. When the input voltage is pulled below a threshold V_{IN_OFF}, the input-undervoltage ($V_{IN\text{-}UV}$) fault condition is recognized and both the HS and LS MOSFETs are turned off. When the input voltage is pulled above a threshold V_{IN_ON}, the $V_{IN\text{-}UV}$ fault condition no longer exists and the device restarts.

The $V_{IN\text{-}OFF}$ and V_{IN_ON} can be programmed via PMBus (see PMBus command section). The default value of $V_{IN\text{-}OFF}$ is 9 V. The default value of V_{IN_ON} is 10 V.

The $V_{IN\text{-}UVP}$ is enabled immediately after V_{DD} passes UVLO level.

$t_{ON\text{-}MAX.}$ Protection (t_{MP})

SiC454 has power up time limit control. When the device does not power up the output voltage above the V_{UFL} in a time interval longer than $t_{ON_MAX_FAULT_LIMIT}$ (t_{MFL}), the $t_{ON\text{-}MAX.}$ (t_M) fault condition is recognized and both the HS and LS MOSFETs are turned off. The device continues restart attempt after the shutdown in a delay time until the t_M fault no longer exists.

The t_{MFL} and delay time can be programmed via PMBus (see PMBus command section). The default value of t_{MFL} is 20 ms. The default delay time is 20 ms.

The t_{MP} is enabled immediately after V_{DD} passes UVLO level.

Overtemperature Protection (OTP)

SiC454 has internal thermal monitor block to support device temperature control. When the device temperature rises above OT_FAULT_LIMIT (OFL), the overtemperature (OT) fault condition is recognized and both the HS and LS MOSFETs are turned off. When OT fault condition no longer exists, the device restarts.

The OFL can be programmed via PMBus (see PMBus command section). The default value of OFL is 125 °C.

The OTP is enabled immediately after V_{DD} passes UVLO level.

Pre-Bias Start-Up

V_{OUT} is monitored through differential output voltage sense pins V_{sen+} and V_{sen-}. If the sensed voltage is higher than V_{SET}, control logic prevents HS and LS FET from switching to avoid negative output voltage spike and excessive current sinking through LS FET.

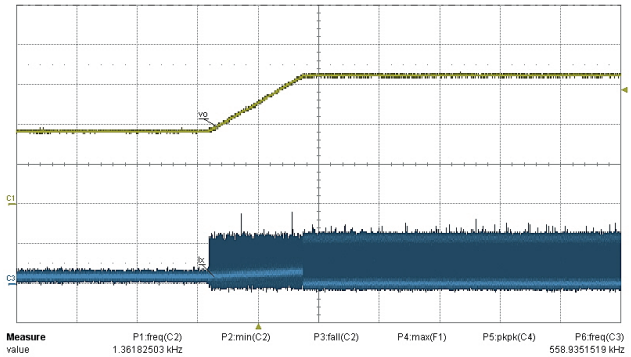

Fig. 8 - Pre-Bias Start-Up

Output Voltage Setting

Connecting a resistor from V_{SET} to A_{GND} will set output voltage (V_{OUT}), eight V_{OUT} related warning and fault voltage limits, and the value of VOUT_SCALE_LOOP as listed in the "VOUT_SCALE_LOOP look up" table. See below table for the list of supported output voltage (V_{OUT}) set by the V_{SET} resistor value. After V_{OUT} is set by the resistor, the voltage level of eight V_{OUT} related warning and fault limits defined by PMBus and the VOUT_SCALE_LOOP register are automatically set also. See below table for the list of the eight V_{OUT} related warning and fault limits set by V_{OUT} setting resistor. Please do not leave the setting resistor open or short, or contact Vishay for technical support. The resistor setting V_{OUT} or anyone of the eight V_{OUT} related warning and fault limits can be separately overridden by a PMBus command with resolution 1.953 mV (see PMBus command table).

OUTPUT VOLTAGE SETTINGS	
V_{SET} RESISTOR (kΩ)	V_{OUT} (V)
0.845	0.60
1.30	0.90
1.78	0.95
2.32	1.00
2.87	1.05
3.48	1.20
4.12	1.25
4.75	1.50
5.49	1.80
6.19	2.10
6.98	2.50
7.87	3.30
8.87	5.00
11.0	12.00

THIS DOCUMENT IS SUBJECT TO CHANGE WITHOUT NOTICE. THE PRODUCTS DESCRIBED HEREIN AND THIS DOCUMENT ARE SUBJECT TO SPECIFIC DISCLAIMERS, SET FORTH AT www.vishay.com/doc?91000

V_{OUT} RELATED WARNINGS AND FAULTS	VOLTAGE LEVEL
POWER_GOOD_ON	90 % V_{OUT}
POWER_GOOD_OFF	85 % V_{OUT}
VOUT_OV_FAULT_LIMIT	115 % V_{OUT}
VOUT_OV_WARN_LIMIT	110 % V_{OUT}
VOUT_UV_WARN_LIMIT	90 % V_{OUT}
VOUT_UV_FAULT_LIMIT	80 % V_{OUT}
VOUT_MARGIN_LOW	95 % V_{OUT}
VOUT_MARGIN_HIGH	105 % V_{OUT}

RT/SYNC PIN and Mode of Switching Configuration

The SiC454 has an RT / SYNC pin. This pin can be used to set the switching frequency and to send or receive a clock signal for synchronization between a master and slave. SiC454 will inject less than 1 mA DC current across the RT/SYNC pin to the ground during initial power up process, and connecting a resistor from the RT/SYNC pin to ground will be used to set the switching frequency according to the table listed below. The following table shows the supported frequency settings by the RT resistor value. Please do not leave the setting resistor open or short, or contact Vishay for technical support. The frequency set by the external resistor can be overridden by a PMBus command with resolution 50 kHz (see PMBus command table).

FREQUENCY SETTINGS	
RT RESISTOR (kΩ)	FREQUENCY (kHz)
0.845	300
1.30	400
1.78	500
2.32	550
2.87	600
3.48	650
4.12	700
4.75	750
5.49	800
6.19	850
6.98	900
7.87	950
8.87	1000
10	1250
11	1500

SiC454 supports four modes of switching configuration, including standalone mode, master mode, slave mode in phase, and slave mode 180° out of phase. The master mode is default one of switching configuration and user can override it to be either standalone mode, slave mode in phase, or slave mode 180° out of phase by PMBus command INTERLEAVE (see PMBus command table).

The following table introduces four modes of switching configuration, recommended RT/SYNC pin connections, and content of related PMBus command INTERLEAVE.

MODE OF SWITCHING CONFIGURATION, PIN CONNECTION, AND INTERLEAVE PMBus				
MODE TYPE	MODE DESCRIPTION	SWITCHING FREQUENCY AND RECOMMENDED RT/SYNC PIN CONNECTION	SWITCHING PHASE	INTERLEAVE COMMAND
Standalone	Chip works individually	Cross a resistor R_{RT} from RT / SYNC pin to ground. During power up, less than 1 mA DC current will be injected into resistor R_{RT} to determine default switching frequency. The default switching frequency can be overridden by PMBus command. After power up, RT / SYNC pin is released and connected to ground via R_{RT}.	Self determined	0x0000
Master	Chip works as a master chip outputting a clock signal in phase with its switching to drive an external slave chip's switching frequency and phase	Cross a resistor R_{RT} from RT / SYNC pin to ground. During power up, less than 1 mA DC current will be injected into resistor R_{RT} to determine default switching frequency. The default switching frequency can be overridden by PMBus command. After power up, RT / SYNC pin outputs a 50 % duty cycle pulse signal toggling between 0 and V_{DD}, which is in phase with the chip's switching node.	Self determined	0x0100
Slave in phase	Chip works as a slave chip receiving an external clock signal and synchronize its switching in phase with the clock signal	Cross a resistor R_{RT} from RT / SYNC pin to ground. During power up, less than 1 mA DC current will be injected into resistor R_{RT} to determine default switching frequency. The default switching frequency can be overridden by PMBus command. When there is an external clock signal presented at the RT / SYNC pin, the switching frequency will be overridden and the chip's switching node is in phase with the external clock signal. If the external clock signal comes from a SiC454 working in master mode switching configuration, the resistor R_{RT} shall be same to the R_{RT} used by the master chip.	In phase with the external clock, or self determined when individually works	0x0120

For technical questions, contact: powerictechsupport@vishay.com
THIS DOCUMENT IS SUBJECT TO CHANGE WITHOUT NOTICE. THE PRODUCTS DESCRIBED HEREIN AND THIS DOCUMENT ARE SUBJECT TO SPECIFIC DISCLAIMERS, SET FORTH AT www.vishay.com/doc?91000

MODE OF SWITCHING CONFIGURATION, PIN CONNECTION, AND INTERLEAVE PMBus				
MODE TYPE	MODE DESCRIPTION	SWITCHING FREQUENCY AND RECOMMENDED RT/SYNC PIN CONNECTION	SWITCHING PHASE	INTERLEAVE COMMAND
Slave 180 ° out of phase	Chip works as a slave chip receiving an external clock signal and synchronize its switching 180 ° out of phase with the clock signal	Cross a resistor R_{RT} from RT / SYNC pin to ground. During power up, less than 1 mA DC current will be injected into resistor R_{RT} to determine default switching frequency. The default switching frequency can be overridden by PMBus command. When there is an external clock signal presented at the RT / SYNC pin, the switching frequency will be overridden and the chip's switching node is 180° out of phase with the external clock signal. If the external clock signal comes from a SiC454 working in master mode switching configuration, the resistor R_{RT} shall be same to the R_{RT} used by the master chip	180° out of phase with the external clock, or self determined when individually works	0x0121

PMBus ADDRESS (ADDR pin)

The SiC454 has a 7-bit register that are used to set the base PMBus address of the device. A resistor assembled between ADDR pin and ground sets an offset from the default pre-configured MFR base address in the memory. Up to 15 different offsets can be set allowing 15 SiC454 devices with unique addresses in a single system. This offset and therefore the device address is read by the ADC during the initialization sequence. The table below provides the resistor values needed to set the 15 offsets from the base address. Please do not leave the setting resistor open or short, or contact Vishay for technical support.

MFR_BASE_ADDRESS				
CONNECTION	ADDRESS	HEX [3 : 0]	NVM [6 : 4]	BIN [6 : 0]
0.845K	1	0	001b	0010 000b
1.3K	2	1	001b	0010 001b
1.78K	3	2	001b	0010 010b
2.32K	4	3	001b	0010 011b
2.87K	5	4	001b	0010 100b
3.48K	6	5	001b	0010 101b
4.12K	7	6	001b	0010 110b
4.75K	8	7	001b	0010 111b
5.49K	9	8	001b	0011 000b
6.19K	10	9	001b	0011 001b
6.98K	11	A	001b	0011 010b
7.87K	12	B	001b	0011 011b
8.87K	13	C	001b	0011 100b
10K	14	D	001b	0011 101b
11K	15	E	001b	0011 110b

Vishay provides another 15 options of PMBus address listed in table of MFR_BASE_ADDRESS_2. Please contact Vishay for technical support.

MFR_BASE_ADDRESS_2				
CONNECTION	ADDRESS	HEX [3 : 0]	NVM [6 : 4]	BIN [6 : 0]
0.845K	1	0	101b	1010 000b
1.3K	2	1	101b	1010 001b
1.78K	3	2	101b	1010 010b
2.32K	4	3	101b	1010 011b
2.87K	5	4	101b	1010 100b
3.48K	6	5	101b	1010 101b
4.12K	7	6	101b	1010 110b
4.75K	8	7	101b	1010 111b
5.49K	9	8	101b	1011 000b
6.19K	10	9	101b	1011 001b
6.98K	11	A	101b	1011 010b
7.87K	12	B	101b	1011 011b
8.87K	13	C	101b	1011 100b
10K	14	D	101b	1011 101b
11K	15	E	101b	1011 110b

THIS DOCUMENT IS SUBJECT TO CHANGE WITHOUT NOTICE. THE PRODUCTS DESCRIBED HEREIN AND THIS DOCUMENT ARE SUBJECT TO SPECIFIC DISCLAIMERS, SET FORTH AT www.vishay.com/doc?91000

PMBus COMMAND LIST						
ADDRESS	**PMBus COMMAND NAME**	**TYPE**	**DATA FORMAT (UNITS)**	**DEFAULT VALUE IN NVM**	**DEFAULT**	**VALID RANGE**
01h	OPERATION	R/W	Byte	88h (1000,1000)	[7] 1: PMBus unit output is on [6] 0: output is turned off immediately and any power down sequencing commads are ignored [5 : 4] 00: V_{OUT} set by VOUT_COMMAND [3 : 2] 10: faults caused by selecting VOUT_MARGIN_HIGH or VOUT_MARGIN_LOW as the nominal output voltage source are acted upon according to the settings of the VOUT_OV_FAULT_RESPONSE and VOUT_IV_FAULT_RESPONSE data bytes [1] 0: not used [0]: reserved 02h	-
02h	ON_OFF_CONFIGURATION	R/W	Byte	1Fh (0001,1111)	[7 : 5] 000: reserved [4] 1: no power up until commanded by the CONTROL and OPERATION [3] 1: to start, the unit requires on/off portion of the OPERATION command [2] 1: to start, the unit requires CONTROL asserted [1] 1: active high to start the unit [0] 1: turn off V_{OUT} as fast as possible, ignore TOFF_DELAY and TOFF_FALL	-
03h	CLEAR_FAULTS	Write	-	-	-	-
10h	WRITE_PROTECT	Write	Byte	00h (0000,0000)	[7 : 0]: 0000,0000: allows write to all registers	-
15h	STORE_USER_ALL	Write	-	-	-	-
16h	RESTORE_USER_ALL	Write	-	-	-	-
19h	CAPABILITY	Read	Byte	D0h (1101,0000)	[7] 1: packet error checking is supported [6 : 5] 10: maximum supported bus speed is 1 MHz [4] 1: the unit has SMBALERT# pin and supports SMBus alert response protocol [3] 0: numeric data is in LINEAR11, LINEAR16, or DIRECT format [2] 0: AVSBUS not supported [1 : 0] 00: reserved	-
1Bh	SMBALERT_MASK	R/W	Block	0x0000 (0000,0000, 0000,0000)	-	-
20h	VOUT_MODE	Read	LINEAR16 (V)	17h (0001,0111)	[7 : 5] 000: the unit uses LINEAR16 format for V_{OUT} related commands [4 : 0] 1,0111: five bit two is complement exponent equals -9 for V_{OUT} related commands	-
21h	VOUT_COMMAND	R/W	LINEAR16 (V)	0133h (0000,0001, 0011,0011)	0.6 V	0.3 V to 14 V, 1.953 mV resolution

THIS DOCUMENT IS SUBJECT TO CHANGE WITHOUT NOTICE. THE PRODUCTS DESCRIBED HEREIN AND THIS DOCUMENT ARE SUBJECT TO SPECIFIC DISCLAIMERS, SET FORTH AT www.vishay.com/doc?91000

PMBus COMMAND LIST						
ADDRESS	PMBus COMMAND NAME	TYPE	DATA FORMAT (UNITS)	DEFAULT VALUE IN NVM	DEFAULT	VALID RANGE
22h	VOUT_TRIM	R/W	LINEAR16 (V)	xxxxh (xxxx,xxxx, xxxx,xxxx)	This command deviates from standard PMBus 1.3 specifications; a factory trim value varying by devices	-2 V to 2 V, 1.953 mV resolution
24h	VOUT_MAX	R/W	LINEAR16 (V)	1C00h (0001,1100, 0000,0000)	14 V	0.3 V to 14 V, 1.953 mV resolution
25h	VOUT_MARGIN_HIGH	R/W	LINEAR16 (V)	0142h (0000,0001, 0100,0010)	0.63 V	0.3 V to 14 V, 1.953 mV resolution
26h	VOUT_MARGIN_LOW	R/W	LINEAR16 (V)	0123h (0000,0001, 0010,0011)	0.57 V	0.3 V to 14 V, 1.953 mV resolution
27h	VOUT_TRANSITION_RATE	R/W	LINEAR11 (mV/µs)	E002h (1110,0000, 0000,0010)	0.125 mV/µs	0.0625 mV/µs to2 mV/µs, 0.0625 mV/µs resolution
29h	VOUT_SCALE_LOOP	R/W	LINEAR11 (V/V)	E808h (1110,1000, 0000,1000)	This command deviates from standard PMBus 1.3 specifications; 1 V/V	0.125 V/V, 0.25 V/V, 0.5 V/V, 1 V/V
33h	FREQUENCY_SWITCH	R/W	LINEAR11 (kHz)	0258h (0000,0010, 0101,1000)	600 kHz	300 kHz to 1500 kHz, 50 kHz resolution
35h	VIN_ON	R/W	LINEAR11 (V)	F814h (1111,1000, 0001,0100)	10 V	1 V to 80 V, 0.5 V resolution
36h	VIN_OFF	R/W	LINEAR11 (V)	0100h (0000,0001, 0000,0000)	9 V	1 V to 80 V, 0.5 V resolution
37h	INTERLEAVE	R/W	Word	0100h (0000,0001, 0000,0000)	[15 : 12] 0000: reserved [11 : 8] 0001: sets unit as Master or Slave [7 : 4] 0000: sets unit as master [3 : 0] 0000: not used	Standalone, master, slave in phase, slave 180° out of phase
40h	VOUT_OV_FAULT_LIMIT	R/W	LINEAR16 (V)	0161h (0000,0001, 0011,0011)	0.69 V	0.3 V to 14 V, 1.953 mV resolution
41h	VOUT_OV_FAULT_RESPONSE	R/W	Byte	F8h (1111,1000)	The device's output is disabled while the fault is present. Operation resumes and the output is enabled when the fault condition no longer exists. It attempts to restart continuously, without limitation, until it is commanded off (by the CONTROL pin or OPERATION command or both), bias power is removed, or another fault condition causes the unit to shut down	00h, 16h, 22h, 36h, C0h, D6h, E2h, F6h, F8h
42h	VOUT_OV_WARN_LIMIT	R/W	LINEAR16 (V)	0151h (0000,0001, 0101,0001)	0.66 V	0.3 V to 14 V, 1.953 mV resolution
43h	VOUT_UV_WARN_LIMIT	R/W	LINEAR16 (V)	0114h (0000,0001, 0001,0100)	0.54 V	0 V to 14 V, 1.953 mV resolution

THIS DOCUMENT IS SUBJECT TO CHANGE WITHOUT NOTICE. THE PRODUCTS DESCRIBED HEREIN AND THIS DOCUMENT ARE SUBJECT TO SPECIFIC DISCLAIMERS, SET FORTH AT www.vishay.com/doc?91000

PMBus COMMAND LIST						
ADDRESS	**PMBus COMMAND NAME**	**TYPE**	**DATA FORMAT (UNITS)**	**DEFAULT VALUE IN NVM**	**DEFAULT**	**VALID RANGE**
44h	VOUT_UV_FAULT_LIMIT	R/W	LINEAR16 (V)	00F5h (0000,0000, 1111,0101)	0.48 V	0 V to 14 V, 1.953 mV resolution
45h	VOUT_UV_FAULT_RESPONSE	R/W	Byte	B9h (1011,1001)	The device shuts down (disables the output) and attempts to restart continuously, without limitation, until it is commanded off (by the EN pin or OPERATION command or both), bias power is removed, or another fault condition causes the unit to shut down. 20 ms delay	00h, 16h, 22h, 36h, B9h, C0h, D6h, E2h, F6h
46h	IOUT_OC_FAULT_LIMIT	R/W	LINEAR11 (A)	SiC450:F870h (1111,1000, 0111,0000) SiC451: F846h (1111,1000, 0100,0110) SiC453: F82Ah (1111,1000, 0010,1010) SiC454: F821h (1111,1000, 0010,0001)	SiC450: 56 A SiC451: 35 A SiC453: 21 A SiC454: 17A	0 A to 127 A, 0.5 A resolution
47h	IOUT_OC_FAULT_RESPONSE	R/W	Byte	A1h (1010,0001)	This command deviates from standard PMBus 1.3 specifications. The device continues operation for 128 consecutive OC cycles and then shut down. Waiting for 20 ms, it hiccups until the fault condition no longer exists	00h, 16h, 22h, 36h, A1h, C0h, D6h, E2h, F6h, F8h
4Ah	IOUT_OC_WARN_LIMIT	R/W	LINEAR11 (A)	SiC450: F868h (1111,1000, 0110,1000) SiC451: F841h (1111,1000, 0100,0010) SiC453: F827h (1111,1000, 0001,1111) SiC454: F81Fh (1111,1000, 0001,1111)	SiC450: 52 A SiC451: 32.5 A SiC453: 19.5 A SiC454: 15.5 A	0 A to 127 A, 0.5 A resolution
4Fh	OT_FAULT_LIMIT	R/W	LINEAR11 (°)	007Dh (0000,0000, 0111,1101)	125 °C	0 °C to 150 °C, 1 °C resolution

THIS DOCUMENT IS SUBJECT TO CHANGE WITHOUT NOTICE. THE PRODUCTS DESCRIBED HEREIN AND THIS DOCUMENT ARE SUBJECT TO SPECIFIC DISCLAIMERS, SET FORTH AT www.vishay.com/doc?91000

PMBus COMMAND LIST						
ADDRESS	PMBus COMMAND NAME	TYPE	DATA FORMAT (UNITS)	DEFAULT VALUE IN NVM	DEFAULT	VALID RANGE
50h	OT_FAULT_RESPONSE	R/W	Byte	F9h (1111,1001)	The device's output is disabled while the fault is present. Operation resumes and the output is enabled when the fault condition no longer exists. It attempts to restart continuously, without limitation, until it is commanded off (by the EN pin or OPERATION command or both), bias power is removed, or another fault condition causes the unit to shut down	00h, 16h, 22h, 36h, C0h, D6h, E2h, F6h, F9h
51h	OT_WARN_LIMIT	R/W	LINEAR11 (°)	0069h (0000,0000, 0110,1001)	105 °C	0 °C to 150 °C, 1 °C resolution
55h	VIN_OV_FAULT_LIMIT	R/W	LINEAR11 (V)	F81Eh (1111,1000, 0001,1110)	15 V	1 V to 80 V, 0.5 V resolution
56h	VIN_OV_FAULT_RESPONSE	R/W	Byte	B8h (1011,1000)	This command deviates from standard PMBus 1.3 specifications.The device's output is disabled while the fault is present. Operation resumes and the output is enabled when the fault condition no longer exists. It does not attempt to restart. The output remains disabled until the fault is cleared	00h, 16h, 22h, 36h, B8h, C0h, D6h, E2h, F6h
58h	VIN_UV_WARN_LIMIT	R/W	LINEAR11 (V)	F812h (1111,1000, 0001,0010)	9 V	1 V to 80 V, 0.5 V resolution
5Dh	IIN_OC_WARN_LIMIT	R/W	LINEAR11 (A)	F80Ah (1111,1000, 0000,1010)	5 A	0 A to 127 A, 0.5 A resolution
5Eh	POWER_GOOD_ON	R/W	LINEAR16 (V)	0114h (0000,0001, 0001,0100)	0.54 V	0.24 V to 14 V, 1.953 mV resolution
5Fh	POWER_GOOD_OFF	R/W	LINEAR16 (V)	0105h (0000,0001, 0000,0101)	0.51 V	0.24 V to 14 V, 1.953 mV resolution
60h	TON_DELAY	R/W	LINEAR11 (ms)	0000h (0000,0000, 0000,0000)	0 ms	0 ms to 127 ms, 1 ms resolution
61h	TON_RISE	R/W	LINEAR11 (ms)	0005h (0000,0000, 0000,0101)	5 ms	0 ms to 127 ms, 1 ms resolution
62h	TON_MAX_FAULT_LIMIT	R/W	LINEAR11 (mS)	0014h (0000,0000, 0001,0100)	20 ms	0 ms to 127 ms, 1 ms resolution
63h	TON_MAX_FAULT_RESPONSE	R/W	Byte	B9h (1011,1001)	The device shuts down (disables the output). It attempts to restart continuously, without limitation, until it is commanded off (by the EN pin or OPERATION command or both), bias power is removed, or another fault condition causes the unit to shut down. 20 ms delay	80h, 83h, 86h, 88h, 89h, 8Ah, 8Bh, B9h
64h	TOFF_DELAY	R/W	LINEAR11 (ms)	0000h (0000,0000, 0000,0000)	0 ms	0 ms to 127 ms, 1 ms resolution

THIS DOCUMENT IS SUBJECT TO CHANGE WITHOUT NOTICE. THE PRODUCTS DESCRIBED HEREIN AND THIS DOCUMENT ARE SUBJECT TO SPECIFIC DISCLAIMERS, SET FORTH AT www.vishay.com/doc?91000

PMBus COMMAND LIST						
ADDRESS	PMBus COMMAND NAME	TYPE	DATA FORMAT (UNITS)	DEFAULT VALUE IN NVM	DEFAULT	VALID RANGE
65h	TOFF_FALL	R/W	LINEAR11 (ms)	0005h (0000,0000, 0000,0101)	5 ms	0 ms to 127 ms, 1 ms resolution
66h	TOFF_MAX_WARN_LIMIT	R/W	LINEAR11 (ms)	003Ch (0000,0000, 0011,1100)	60 ms	0 ms to 127 ms, 1 ms resolution
78h	STATUS_BYTE	Read	Byte	00h (0000,0000)	No faults	-
79h	STATUS_WORD	Read	Word	0000h (0000,0000, 0000,0000)	No faults	-
7Ah	STATUS_VOUT	Read	Byte	00h (0000,0000)	No faults	-
7Bh	STATUS_IOUT	Read	Byte	00h (0000,0000)	No faults	-
7Ch	STATUS_INPUT	Read	Byte	00h (0000,0000)	No faults	-
7Dh	STATUS_TEMPERATURE	Read	Byte	00h (0000,0000)	No faults	-
7Eh	STATUS_CML	Read	Byte	00h (0000,0000)	No faults	-
80h	STATUS_MFR_SPECIFIC	Read	Byte	00h (0000,0000)	No faults	-
88h	READ_VIN	Read	LINEAR11 (V)	n/a	n/a	0 V to 80 V
89h	READ_IIN	Read	ULINEAR1 1 (A)	n/a	n/a	exp: (-4) to (-16)
8Bh	READ_VOUT	Read	LINEAR16 (V)	n/a	n/a	0 V to 48 V
8Ch	READ_IOUT	Read	ULINEAR1 1 (A)	n/a	n/a	exp: (-4) to (-10)
8Dh	READ_TEMPERATURE	Read	LINEAR11 (°)	n/a	n/a	(-50)° to 150°
94h	READ_DUTY_CYCLE	Read	LINEAR11 (%)	n/a	n/a	0 % to 100 %
96h	READ_POUT	Read	ULINEAR1 1 (W)	n/a	n/a	exp: (-4) to (-16)
97h	READ_PIN	Read	ULINEAR1 1 (W)	n/a	n/a	exp: (-4) to (-16)
98h	PMBUS_REVISION	Read	Byte	33h (0011,0011)	[7 :4] 0011: part I revision 1.3 [3 : 0] 0011: part II revision 1.3	
9Eh	MFR_SERIAL	R/W	Block	n/a	For user to store customized information	
ADh	IC_DEVICE_ID	R/W	Block	0104h	-	
D7h	MFR_BASE_ADDRESS	Pins program	7-bit	10h	-	
E2h	MFR_BASE_ADDRESS_2	Pins program	7-bit	50h	-	

PMBus COMMAND DETAILS

OPERATION (01 h)

The OPERATION command sets the operational state of the regulator. It is used for the following functions:

- Turn the regulator output on and off in conjunction with the input from EN signal
- Set the output voltage with upper or lower margins

THIS DOCUMENT IS SUBJECT TO CHANGE WITHOUT NOTICE. THE PRODUCTS DESCRIBED HEREIN AND THIS DOCUMENT ARE SUBJECT TO SPECIFIC DISCLAIMERS, SET FORTH AT www.vishay.com/doc?91000

- Select the fault handling behavior when fault is caused by margining state

COMMAND	OPERATION							
Bit position	7	6	5	4	3	2	1	0
Function	On/off	Off B	Margin		MRGNFLT		Nouse	RSV
Default (88 h)	1	0	0	0	1	0	0	0

Bit Description (default setting in bold)

BITS	SYMBOL	VALUE	ACTION
7	On/off	0b	Output is disabled
		1b	**Output is enabled**
6	Off B	**0b**	**Output is turned off immediately and power off sequence commands ignored**
		1b	Regulator turns off following the TOFF_DELAY and TOFF_FALL command
5 : 4	Margin	**00b**	**Output voltage is set by the PMBus VOUT_COMMAND data**
		01b	Output voltage is set by the PMBus VOUT_MARGIN_LOW data
		10b	Output voltage is set by the PMBus VOUT_MARGIN_HIGH data
		11b	Not supported
3 : 2	MRGNFLT	00b	Not supported
		01b	Faults caused by selecting VOUT_MARGIN_HIGH or VOUT_MARGIN_LOW as the nominal output voltage source are ignored
		10b	**Faults caused by selecting VOUT_MARGIN_HIGH or VOUT_MARGIN_LOW as the nominal output voltage source are acted upon according to the settings of the VOUT_OV_FAULT_RESPONSE and VOUT_UV_FAULT_RESPONSE**
		11b	Not supported
1	Nouse	x	Not used
0	RSV	x	Reserved

ON_OFF_CONFIGURATION (02 h)

The ON_OFF_CONFIG command configures the combination of EN pin input and PMBus commands needed to turn the unit on and off. This includes how the unit responds when power is applied.

COMMAND	ON/OFF_CONFIGURATION							
Bit position	7	6	5	4	3	2	1	0
Function	RSV			PU	CMD	EN	ENPOL	Off B1
Default (1Fh)	0	0	0	1	1	1	1	1

Bit Description (default setting in bold)

BITS	SYMBOL	VALUE	ACTION
7 : 5	RSV	000b	Reserved
4	PU	0b	Regulator powers up any time power is present regardless of state of the EN signalpin
		1b	**Regulator does not power up until commanded by the CONTROLEN pin and OPERATION command**
3	CMD	0b	Regulator ignores the “on” bit in the OPERATION command
		1b	**Regulator responds the “on” bit in the OPERATION command**
2	EN	0b	Regulator ignores the EN pin. Power conversion is controlled only by the OPERATION command
		1b	**Regulator requires the EN pin to be asserted to start the unit**
1	ENPOL	0b	EN signal is active low
		1b	**EN signal is active high**
0	OFFB1	0b	Regulator turns off following the t_{OFF_DELAY} and t_{OFF_FALL} command when EN signal is used to turn off
		1b	**Regulator turns off immediately**

CLEAR_FAULTS (03 h)

The CLEAR_FAULTS command is used to clear any fault bits that have been set. This command clears all bits in all status registers simultaneously. At the same time, the device negates (clears, releases) its SALRT ALERT# signal output if the device is asserting the SALRT ALERT# signal.

THIS DOCUMENT IS SUBJECT TO CHANGE WITHOUT NOTICE. THE PRODUCTS DESCRIBED HEREIN AND THIS DOCUMENT ARE SUBJECT TO SPECIFIC DISCLAIMERS, SET FORTH AT www.vishay.com/doc?91000

WRITE_PROTECT (10 h)

The WRITE_PROTECT command is used to control writing to the PMBus device. The intent of this command is to provide protection against accidental changes. This command is not intended to provide protection against deliberate or malicious changes to a device's configuration or operation.

COMMAND	WRITE_PROTECT							
Bit position	7	6	5	4	3	2	1	0
Function	WTPRT			Nouse				
Default (00h)	0	0	0	0	0	0	0	0

Bit Description (default setting in bold)

BITS	SYMBOL	VALUE	ACTION
7 : 5	WTPRT	**000b**	**Enable writes to all commands**
		100b	Disable all writes except to the WRITE_PROTECT command
		010b	Disable all writes except to the WRITE_PROTECT and OPERATION commands
		001b	Disable all writes except to the WRITE_PROTECT, OPERATION, ON_OFF_CONFIG and $V_{OUT_COMMAND}$ commands
4 : 0	Nouse	00000b	Not used

STORE_USER_ALL (15 h)

The STORE_USER_ALL command instructs the PMBus device to copy the entire contents of the operating memory to the matching locations in the non-volatile User Store memory. Any items in operating memory that do not have matching locations in the User Store are ignored.

RESTORE_USER_ALL (16 h)

The RESTORE_USER_ALL command instructs the PMBus device to copy the entire contents of the nonvolatile user store memory (NVM) to the matching locations in the operating memory. The values in the operating memory are overwritten by the value retrieved from the user store. This feature is protected by the EEPROM_PASSWORD (DBh) command, see the section below for more information. Any items in user store that do not have matching locations in the operating memory are ignored, see the summary table for details.

CAPABILITY (19 h)

The CAPABILITY command provides a way for a host system to determine some key capabilities of the PMBus device.

This is a read only register.

COMMAND	WRITE_PROTECT							
Bit position	7	6	5	4	3	2	1	0
Function	PEC	SPD		ALRT	NFMT	AVS	RSV	
Default (D0h)	1	1	0	1	0	0	0	0

Bit Description

BITS	SYMBOL	VALUE	ACTION
7	PEC	1b	Packet error checking is supported
6 : 5	SPD	10b	Maximum supported bus speed is 1 MHz
4	ALRT	1b	The unit has ALERT# pin and supports PMBus alert response protocol
3	NFMT	0b	Numeric data is in LINEAR11, LINEAR16, or DIRECT format
2	AVS	0b	AVSBUS not supported
1 : 0	RSV	00b	Reserved

THIS DOCUMENT IS SUBJECT TO CHANGE WITHOUT NOTICE. THE PRODUCTS DESCRIBED HEREIN AND THIS DOCUMENT ARE SUBJECT TO SPECIFIC DISCLAIMERS, SET FORTH AT www.vishay.com/doc?91000

SMBALERT_MASK (1Bh)

The SMBALERT_MASK command may be used to prevent a warning or fault condition from asserting the SMBALERT# signal. The command format used to block a status bit or bits from causing the SMBALERT# signal to be asserted is shown in Fig. 9. The bits in the mask byte align with the bits in the corresponding status register. For example, if the STATUS_TEMPERATURE command code were sent with the mask byte 01000000b, then an over temperature warning OT_WARNING (overtemperature warning) condition would be blocked from asserting SMBALERT#.

	7	1	1	8	1	8	1	8	1	
S	Slave Address	W	A	SMBalert_mask Command_code	A	Status_x Command code	A	Mask BYTE	A	P

Fig. 9 - SMBALSER_MASK Command Packet Format

The command format used by the host to determine the SMALER_MASK setting for a given status register is shown in Fig. 10.

	7	1	1	8	1	8	1	8	1
S	Slave address	W	A	SMBalert_Mask Command_code	A	Block count (=1)	A	Status_x Command code	A

	7	1	1	8	1	8	1	
S r	Slave address	R	A	Block count (=1)	A	Mask byte	N A	P

Fig. 10 - Retrieving the SMBALSER_MASK Setting for a Given Status Register

VOUT_MODE (20 h)

The PMBus specification dictates that the data word for the V_{OUT_MODE} command is one byte that consists of a 3-bit mode and 5-bit exponent parameter, as shown below. The 3-bit mode sets whether the device uses the linear or direct modes for output voltage related commands. The 5-bit parameter sets the exponent value for the linear data mode. The mode and exponent parameters are fixed and do not permit the user to change the values.

This is a read only register

COMMAND	WRITE_PROTECT							
Bit position	7	6	5	4	3	2	1	0
Function	Mode			EXP				
Default (D0h)	0	0	0	1	0	1	1	1

Bit Description

BITS	SYMBOL	VALUE	ACTION
7 : 5	Mode	000b	The unit uses ULINEAR16 format for V_{OUT} related commands
4 : 0	EXP	10111b	5-bit two's complement binary integer equals -9 for V_{OUT} related commands

THIS DOCUMENT IS SUBJECT TO CHANGE WITHOUT NOTICE. THE PRODUCTS DESCRIBED HEREIN AND THIS DOCUMENT ARE SUBJECT TO SPECIFIC DISCLAIMERS, SET FORTH AT www.vishay.com/doc?91000

VOUT_COMMAND (21 h)

The VOUT_COMMAND is used to directly set the output voltage using the ULINEAR16 format, which is a 16- bit unsigned integer. This is a read and write register. The output voltage, in volts, is calculated from the equation:

$$V_{OUT_SET} = V_{OUT_COMMAND} \times 2^N$$

Where:

V_{OUT_SET} is the set output voltage in volt

VOUT_COMMAND is the 16- bit unsigned binary integer specified in the command

N is a 5- bit two's complement binary integer specified in V_{OUT} mode [4 : 0]

COMMAND	V_{OUT} COMMAND															
Bit position	7	6	5	4	3	2	1	0	7	6	5	4	3	2	1	0
Function	Data byte high								Data byte low							
Default (133h)	0	0	0	0	0	0	0	1	0	0	1	1	0	0	1	1

Bit Description

BITS	FORMAT	VALUE	ACTION
15 : 0	ULINEAR 16	0133h	VOUT_COMMAND is specified as 307 x 2^{-9} = 0.6 V

The output voltage's range is 0.3 V to 14 V, resolution is 1.953 mV, and its NVM register default store value is 0133h equivalent to 0.6 V.

VOUT_TRIM (22 h)

The VOUT_TRIM command is used to apply a fixed offset voltage to the output voltage command value. This is a read and write register. The VOUT_TRIM has two data bytes formatted as a two's complement binary integer (SLINEAR16 format). It is most typically used by the end user to trim the output voltage at the time the PMBus device is assembled into the end user's system.

The VOUT_TRIM command deviates from standard PMBus 1.3 specifications, at which it requires adding an integer calculating from the expected offset voltage and the VOUT_SCALE_LOOP to VOUT_TRIM's NVM register default store value varying by devices. The effect of this command on the output voltage, in volts, is calculated from the equation:

$$\Delta Voltage = \frac{\Delta V \times 2^N}{VOUT_SCALE_LOOP}$$

Where:

Δvoltage is the fixed offset voltage to the output voltage in volt

ΔV is the 16-bit two's complement integer specified in VOUT_TRIM

VOUT_SCALE_LOOP is the dimensionless scale factor specified in VOUT_SCALE_LOOP command

N is a 5-bit two's complement binary integer specified in VOUT_MODE [4:0].

COMMAND	V_{OUT} TRIM															
Bit position	15	14	13	12	11	10	9	8	7	6	5	4	3	2	1	0
Function	sign	data														
Default (0000h)	0	0	0	0	0	0	0	0	0	0	0	0	0	0	0	0

Bit Description

BITS	FORMAT	VALUE	ACTION
15 : 0	ULINEAR 16	0000h	ΔV is 0 V

The offset voltage's range is -2 V to 2 V, resolution is 1.953 mV, and its NVM register default store value is a factory trim value varying by devices. The users need to calculate a 16-bit two's complement integer number following the above equation and add the number to the factory trim value, so as to achieve the expected offset voltage to the output voltage.

THIS DOCUMENT IS SUBJECT TO CHANGE WITHOUT NOTICE. THE PRODUCTS DESCRIBED HEREIN AND THIS DOCUMENT ARE SUBJECT TO SPECIFIC DISCLAIMERS, SET FORTH AT www.vishay.com/doc?91000

VOUT_MAX (24 h)

The VOUT_MAX command sets an upper limit on the output voltage the unit can command regardless of any other commands or combinations. The intent of this command is to provide a safeguard against a user accidentally setting the output voltage to a possibly destructive level rather than to be the primary output overvoltage protection. This is a read and write register.

The VOUT_MAX uses ULINEAR16 format, which is a 16- bit unsigned integer according to the setting of the VOUT_MAX command.

Bit Description

BITS	FORMAT	VALUE	ACTION
15 : 0	Ulinear 16	1C00h	The VOUT_MAX is specified as 14 V

The VOUT_MAX range is 0.3 V to 14 V, resolution is 1.953 mV, and its NVM register default store value is 1C00h equivalent to 14 V.

VOUT_MARGIN_HIGH (25 h)

The VOUT_MARGIN_HIGH command loads the unit with the voltage to which the output is to be changed when the OPERATION command is set to “margin high”. This is a read and write register.

The VOUT_MARGIN_HIGH uses ULINEAR16 format, which is a 16-bit unsigned integer according to the setting of the VOUT_MODE command.

Bit Description

BITS	FORMAT	VALUE	ACTION
15 : 0	Ulinear 16	0142h	The VOUT_MARGIN_HIGH is specified as 0.63 V

The VOUT_MARGIN_HIGH range is 0.3 V to 14 V, resolution is 1.953 mV, and its NVM register default store value is 0142h equivalent to 0.63 V.

VOUT_MARGIN_LOW (26 h)

The VOUT_MARGIN_LOW command loads the unit with the voltage to which the output is to be changed when the OPERATION command is set to margin low. This is a read and write register.
The VOUT_MARGIN_LOW uses ULINEAR16 format, which is a 16-bit unsigned integer according to the setting of the VOUT_MODE command.

Bit Description

BITS	FORMAT	VALUE	ACTION
15 : 0	Ulinear 16	0123h	The VOUT_MARGIN_LOW is specified as 0.57 V

The VOUT_MARGIN_LOW range is 0.3 V to 14 V, resolution is 1.953 mV, and its NVM register default store value is 0123h equivalent to 0.57 V.

VOUT_TRANSITION_RATE (27 h)

The VOUT_TRANSITION_RATE command sets the rate in mV/μs at which the output voltage should change voltage when a PMBus device receives either a VOUT_COMMAND or OPERATION (margin high, margin low) that causes the output voltage to change. This commanded rate of change does not apply when the unit is commanded to turn on or to turn off. This is a read and write register.
The VOUT_TRANSITION_RATE uses LINEAR11 format, which has two data bytes with an 11-bit two’s complement mantissa and a 5-bit two’s complement exponent (scaling factor). The 5-bit two’s complement exponent of the VOUT_TRANSITION_RATE command is constant as 5’b11100, that is, -4 in decimal. The LINEAR11 format of the two data bytes is illustrated in table below.

Table - LINEAR11 Numeric Format Data Bytes

COMMAND	VOUT_TRANSITION_RATE															
Bit position	15	14	13	12	11	10	9	8	7	6	5	4	3	2	1	0
Function	EXP					MAN										
Default (E002h)	1	1	1	0	0	0	0	0	0	0	0	0	0	0	1	0

THIS DOCUMENT IS SUBJECT TO CHANGE WITHOUT NOTICE. THE PRODUCTS DESCRIBED HEREIN AND THIS DOCUMENT ARE SUBJECT TO SPECIFIC DISCLAIMERS, SET FORTH AT www.vishay.com/doc?91000

Bit Description

BITS	SYMBOL	VALUE	ACTION
15	EXP SGN	1b	Exponent value with negative sign
14 : 11	EXP	1100b	Five 5-bit two's complement exponent equals -4 for VOUT_TRANSITION_RATE command
10	MAN SGN	0b	Mantissa value with positive sign
19 : 0	MAN DATA	00, 0000, 0010b	Eleven 11-bit two's complement mantissa equals 2 for VOUT_TRANSITION_RATE command

The VOUT_TRANSITION_RATE range is 0.0625 - 2 mV/µs, resolution is 0.0625 mV/µs, and its NVM register default store value is E002h equivalent to 0.125 mV/µs. Any commands out of the valid range or with incorrect resolution will be ignored and reported.

VOUT_SCALE_LOOP (29 h)

The VOUT_SCALE_LOOP command deviates from standard PMBus 1.3 specifications. The VOUT_SCALE_LOOP command is used to scale down both the VOUT_COMMAND and the sense differential output voltage at the unit input, so as to extend operational range of the PMBus unit to reach the maximum output voltage 12 V without the requirement of external resistor divider on board. This is a read and write register.
The VOUT_SCALE_LOOP uses LINEAR11 format, which has two data bytes with an 11- bit two's complement mantissa and a 5-bit two's complement exponent (scaling factor). The 5-bit two's complement exponent of the VOUT_SCALE_LOOP command is constant as 5'b11101, that is, -3 in decimal.

The LINEAR11 format of the two data bytes is illustrated in Table "LINEAR11 Numeric Format Data Bytes".

Table - VOUT_SCALE_LOOP Look Up

SET OUTPUT VOLTAGE (V)	SCALE DOWN FACTOR (V/V)	VOUT_SCALE_LOOP BITS [15 : 0]
$0.3\ V < V_{OUT} < 1.8\ V$	1.0	E808h
$1.8\ V \leq V_{OUT} < 3.3\ V$	0.5	E804h
$3.3\ V \leq V_{OUT} \leq 5.0\ V$	0.25	E802h
$5.0\ V < V_{OUT} \leq 12.0\ V$	0.125	E801h

Bit Description

BITS	SYMBOL	VALUE	ACTION
15 to 0	Linear 11	E808h	The VOUT_SCALE_LOOP is specified as 1 V/V

The VOUT_SCALE_LOOP offers four options of scale down factor: 1.0 V/V, 0.5 V/V, 0.25 V/V, and 0.125 V/V. When V_{OUT} is set by a resistor between V_{SET} pin and ground, the value of VOUT_SCALE_LOOP is automatically chosen according to the "VOUT_SCALE_LOOP look up" table. When V_{OUT} is set by PMBus VOUT_COMMAND, the value of the VOUT_SCALE_LOOP shall be updated according to the "VOUT_SCALE_LOOP look up" table.

The VOUT_SCALE_LOOP NVM register default store value is E808h equivalent to 1.0 V/V. Any commands out of the valid options will be ignored and reported.

FREQUENCY_SWITCH (33 h)

The FREQUENCY_SWITCH command sets the switching frequency, in kHz, of the PMBus unit. This is a read and write register. The FREQUENCY_SWITCH uses LINEAR11 format, which has two data bytes with an 11- bit two's complement mantissa and a 5-bit two's complement exponent (scaling factor). The 5-bit two's complement exponent of the FREQUENCY_SWITCH command is constant as 5'b00000, that is, 0 in decimal. The LINEAR11 format of the two data bytes is illustrated in Table - "LINEAR11 Numeric Format Data Bytes".

Bit Description

BITS	SYMBOL	VALUE	ACTION
15 : 0	Linear 11	0258h	FREQUENCY_SWITCH is specified 600 kHz.

The FREQUENCY_SWITCH range is 300 kHz to 1500 kHz, resolution is 50 kHz, and its NVM register default store value is 0258h equivalent to 600 kHz. Any commands out of the valid range or with incorrect resolution will be ignored and reported.

THIS DOCUMENT IS SUBJECT TO CHANGE WITHOUT NOTICE. THE PRODUCTS DESCRIBED HEREIN AND THIS DOCUMENT ARE SUBJECT TO SPECIFIC DISCLAIMERS, SET FORTH AT www.vishay.com/doc?91000

VIN_ON (35 h)

The VIN_ON command sets the value of the input voltage, in volt, at which the PMBus unit should start power conversion. This is a read and write register. The VIN_ON uses LINEAR11 format, which has two data bytes with an 11-bit two's complement mantissa and a 5-bit two's complement exponent (scaling factor). The 5-bit two's complement exponent of the VIN_ON command is constant as 5'b11111, that is, -1 in decimal. The LINEAR11 format of the two data bytes is illustrated in Table - "LINEAR11 Numeric Format Data Bytes".

Bit Description

BITS	SYMBOL	VALUE	ACTION
15 : 0	Linear 11	F814h	The VIN_ON is specified as 10 V

The VIN_ON range is 1 V to 80 V, resolution is 0.5 V, and its NVM register default store value is F814h equivalent to 10 V. Any commands out of the valid range or with incorrect resolution will be ignored and reported.

VIN_OFF (36 h)

The VIN_OFF command sets the value of the input voltage, in volt, at which the PMBus unit, once operation has started, should stop power conversion. This is a read and write register. The VIN_OFF uses LINEAR11 format, which has two data bytes with an 11-bit two's complement mantissa and a 5-bit two's complement exponent (scaling factor). The 5-bit two's complement exponent of the VIN_OFF command is constant as 5'b11111, that is, -1 in decimal. The LINEAR11 format of the two data bytes is illustrated in Table - "LINEAR11 Numeric Format Data Bytes".

Bit Description

BITS	SYMBOL	VALUE	ACTION
15 : 0	Linear 11	F812h	The VIN_OFF is specified as 9 V

The VIN_OFF range is 1 V to 80 V, resolution is 0.5 V, and its NVM register default store value is F812h equivalent to 9 V. Any commands out of the valid range or with incorrect resolution will be ignored and reported.

INTERLEAVE (37 h)

The INTERLEAVE command deviates from standard PMBus 1.3 specifications. The INTERLEAVE command is used to sets the mode of switching frequency and phase, at which the PMBus unit, once operation has started, should use to generate switching frequency and phase angle. This is a read and write register.

The INTERLEAVE commands offer four modes of switching configuration: STANDALONE, MASTER, SLAVE in phase, and SALVE 180° out of phase.
The description of all four modes and the corresponding INTERLEAVE command is listed in the table below.

INTERLEAVE COMMAND AND MODE OF SWITCHING FREQUENCY GENERATION		
	DESCRIPTION	INTERLEAVE BITS [15 : 0]
STANDALONE	The value of unit switching frequency is set by resistance of a resistor connected to RT/SYNC unit designated pin. The setting value of the switching frequency will be overridden after the PMBus unit receiving the PMBus command FREQUENCY_SWITCH command. The RT/SYNC pin shall not be used for other purposes	0000h
MASTER	The value of unit switching frequency is set by resistance of a resistor connected to RT/SYNC pin. The setting value of the switching frequency will be overridden after the PMBus unit receiving the PMBus command FREQUENCY_SWITCH command. After inside power V_{DD} of the unit is above its under voltage level, the RT/SYNC pin will output a 50% duty cycle pulse signal in phase with the switching frequency, which may be used to drive other units set as the SLAVE mode by INTERLEAVE command. The RT/SYNC pin shall not be used for other purposes	0100h
SLAVE in phase	The value of unit switching frequency is set by resistance of a resistor connected to RT/SYNC pin. The setting value of the switching frequency will be overridden after the PMBus unit receiving the PMBus command FREQUENCY_SWITCH command. When an external pulse switching signal is connected to the /SYNC pin, the unit will synchronize its switching frequency to the external pulse switching signal with 0° phase difference. The RT/SYNC pin shall not be used for other purpose	0120h
SLAVE 180° out of phase	The value of unit switching frequency is set by resistance of a resistor connected to RT/SYNC pin. The setting value of the switching frequency will be overridden after the PMBus unit receiving the PMBus command FREQUENCY_SWITCH command. When an external pulse switching signal is connected to the /SYNC pin, the unit will synchronize its switching frequency to the external pulse switching signal with 180° phase difference. The RT/SYNC pin shall not be used for other purposes	0121h

THIS DOCUMENT IS SUBJECT TO CHANGE WITHOUT NOTICE. THE PRODUCTS DESCRIBED HEREIN AND THIS DOCUMENT ARE SUBJECT TO SPECIFIC DISCLAIMERS, SET FORTH AT www.vishay.com/doc?91000

Bit Description

BITS	SYMBOL	VALUE	ACTION
15:0	Linear 11	0100h	The INTERLEAVE is specified as MASTER mode

The INTERLEAVE NVM register default store value is 0100h equivalent to MASTER mode. Any commands out of the options will be ignored and reported.

VOUT_OV_FAULT_LIMIT (40 h)

The VOUT_OV_FAULT_LIMIT command sets the value of the output voltage measured at the sense of output pins that causes an output overvoltage fault. This is a read and write register.

The VOUT_OV_FAULT_LIMIT uses ULINEAR16 format, which is a 16-bit unsigned integer according to the setting of the VOUT_MODE command.

Bit Description

BITS	SYMBOL	VALUE	ACTION
15:0	Ulinear 16	0161h	The VOUT_OV_FAULT_LIMIT is specified as 0.69 V

The VOUT_OV_FAULT_LIMIT range is 0.3 V to 14 V, resolution is 1.953 mV, and its NVM register default store value is 0161h equivalent to 0.69 V.

VOUT_OV_FAULT_RESPONSE (41h)

The VOUT_OV_FAULT_RESPONSE command instructs the device on what action to take in response to an output overvoltage fault. This is a read and write register and the NVM register default store value is F8h.

COMMAND	VOUT_OV_FAULT_RESPONSE							
Bit position	7	6	5	4	3	2	1	0
Function	OVRSP		OVRTY			OVDLY		
Default (F8h)	1	1	1	1	1	0	0	0

Supported Commands

OVRSP		OVRTY			OVDLY			DESCRIPTIONS
1	1	1	1	1	0	0	0	The device's output is disabled while the fault is present. Operation resumes and the output is enabled when the fault condition no longer exists. It attempts to restart continuously, without limitation, until it is commanded off (by the CONTROL pin or OPERATION command or both), bias power is removed, or another fault condition causes the unit to shut down
0	0	0	0	0	0	0	0	The device continues operation
0	0	0	1	0	1	1	0	The device continues operation
0	0	1	0	0	0	1	0	The device continues operation
0	0	1	1	0	1	1	0	The device continues operation
1	1	0	0	0	0	0	0	The device's output is disabled while the fault is present. Operation resumes and the output is enabled when the fault condition no longer exists
1	1	0	1	0	1	1	0	The device's output is disabled while the fault is present. Operation resumes and the output is enabled when the fault condition no longer exists
1	1	1	0	0	0	1	0	The device's output is disabled while the fault is present. Operation resumes and the output is enabled when the fault condition no longer exists
1	1	1	1	0	1	1	0	The device's output is disabled while the fault is present. Operation resumes and the output is enabled when the fault condition no longer exists

VOUT_OV_WARN_LIMIT (42h)

The VOUT_OV_WARN_LIMIT command sets the value of the output voltage measured at the sense of output pins that causes an output voltage high warning. This is a read and write register.

The VOUT_OV_WARN_LIMIT uses ULINEAR16 format, which is a 16-bit unsigned integer according to the setting of the VOUT_MODE command.

THIS DOCUMENT IS SUBJECT TO CHANGE WITHOUT NOTICE. THE PRODUCTS DESCRIBED HEREIN AND THIS DOCUMENT ARE SUBJECT TO SPECIFIC DISCLAIMERS, SET FORTH AT www.vishay.com/doc?91000

Bit Description

BITS	SYMBOL	VALUE	ACTION
15:0	Ulinear 16	0151h	The VOUT_OV_WARN_LIMIT is specified as 0.66 V

The VOUT_OV_WARN_LIMIT range is 0.3 V to 14 V, resolution is 1.953 mV, and its NVM register default store value is 0151h equivalent to 0.66 V.

VOUT_UV_WARN_LIMIT (43h)

The VOUT_UV_WARN_LIMIT command sets the value of the output voltage measured at the sense of output pins that causes an output voltage low warning. This is a read and write register.

The VOUT_UV_WARN_LIMIT uses ULINEAR16 format, which is a 16-bit unsigned integer according to the setting of the VOUT_MODE command.

Bit Description

BITS	SYMBOL	VALUE	ACTION
15:0	Ulinear 16	0114h	The VOUT_UV_WARN_LIMIT is specified as 0.54 V

The VOUT_UV_WARN_LIMIT range is 0 V to 14 V, resolution is 1.953 mV, and its NVM register default store value is 0114h equivalent to 0.54 V.

VOUT_UV_FAULT_LIMIT (44h)

The VOUT_UV_FAULT_LIMIT command sets the value of the output voltage measured at the sense of output pins that causes an output undervoltage fault. This is a read and write register.

The VOUT_UV_FAULT_LIMIT uses ULINEAR16 format, which is a 16-bit unsigned integer according to the setting of the VOUT_MODE command.

Bit Description

BITS	SYMBOL	VALUE	ACTION
15:0	Ulinear 16	00F5h	The VOUT_UV_FAULT_LIMIT is specified as 0.48 V

The VOUT_UV_FAULT_LIMIT range is 0 V to 14 V, resolution is 1.953 mV, and its NVM register default store value is 00F5h equivalent to 0.48 V.

VOUT_UV_FAULT_RESPONSE (45h)

The VOUT_UV_FAULT_RESPONSE command instructs the device on what action to take in response to an output undervoltage fault. This is a read and write register and the NVM register default store value is B9h.

COMMAND	VOUT_UV_FAULT_RESPONSE							
Bit position	7	6	5	4	3	2	1	0
Function	UVRSP		UVRTY			UVDLY		
Default (B9h)	1	0	1	1	1	0	0	1

THIS DOCUMENT IS SUBJECT TO CHANGE WITHOUT NOTICE. THE PRODUCTS DESCRIBED HEREIN AND THIS DOCUMENT ARE SUBJECT TO SPECIFIC DISCLAIMERS, SET FORTH AT www.vishay.com/doc?91000

Supported Commands

UVRSP		UVRTY			UVDLY			DESCRIPTIONS
1	0	1	1	1	0	0	1	The device shuts down (disables the output) and attempts to restart continuously, without limitation, until it is commanded off (by the EN pin or OPERATION command or both), bias power is removed, or another fault condition causes the unit to shut down. 20 ms delay
0	0	0	0	0	0	0	0	The device continues operation
0	0	0	1	0	1	1	0	The device continues operation
0	0	1	0	0	0	1	0	The device continues operation
0	0	1	1	0	1	1	0	The device continues operation
1	1	0	0	0	0	0	0	The device's output is disabled while the fault is present. Operation resumes and the output is enabled when the fault condition no longer exists. The device does not attempt to restart. The output remains disabled until the fault is cleared
1	1	0	1	0	1	1	0	The device's output is disabled while the fault is present. Operation resumes and the output is enabled when the fault condition no longer exists. The device does not attempt to restart. The output remains disabled until the fault is cleared
1	1	1	0	0	0	1	0	The device's output is disabled while the fault is present. Operation resumes and the output is enabled when the fault condition no longer exists. The device does not attempt to restart. The output remains disabled until the fault is cleared
1	1	1	1	0	1	1	0	The device's output is disabled while the fault is present. Operation resumes and the output is enabled when the fault condition no longer exists. The device does not attempt to restart. The output remains disabled until the fault is cleared

IOUT_OC_FAULT_LIMIT (46h)

The IOUT_OC_FAULT_LIMIT command sets the value of the output current, in Amperes, that causes the overcurrent detector to indicate an overcurrent fault condition. This is a read and write register. The IOUT_OC_FAULT_LIMIT uses LINEAR11 format, which has two data bytes with an 11-bit two's complement mantissa and a 5-bit two's complement exponent (scaling factor). The 5-bit two's complement exponent of the IOUT_OC_FAULT_LIMIT command is constant as 5'b11111, that is, -1 in decimal. The LINEAR11 format of the two data bytes is illustrated in Table - "LINEAR11 Numeric Format Data Bytes".

Bit Description

BITS	SYMBOL	VALUE	ACTION
15:0	Linear 11	F870h	The IOUT_OC_FAULT_LIMIT is 56 A for SiC450
		F846h	The IOUT_OC_FAULT_LIMIT is 35 A for SiC451
		F82Ah	The IOUT_OC_FAULT_LIMIT is 21 A for SiC453
		F822h	The IOUT_OC_FAULT_LIMIT is 17 A for SiC454

The IOUT_OC_FAULT_LIMIT range is 0 A to 127 A, resolution is 0.5 A, and its NVM register default store value is F846h for SiC451 equivalent to 35 A. Any commands out of the valid range or with incorrect resolution will be ignored and reported.

IOUT_OC_FAULT_RESPONSE (47h)

The IOUT_OC_FAULT_RESPONSE is used to set device over current protection response (OCP) when valley inductor current is higher than IOUT_OC_FAULT_LIMIT. This is a read and write register and the NVM register default store value is A1h.

COMMAND	IOUT_OC_FAULT_RESPONSE							
Bit position	7	6	5	4	3	2	1	0
Function	OCRSP		OCCYCL			OCDLY		
Default (0xA1h)	1	0	1	0	0	0	0	1

This command deviates from standard PMBus 1.3 specifications. It provides users 3-bit [5 : 3] setting to generate OC fault based on total number of consecutive pulse-by-pulse OC counts. It also provides users 3-bit [2 : 0] delay time option between shutdown and next restart attempt. In case of bits [5 : 3] = 111b, the device does not report OC fault and continues to operate indefinitely while maintaining the output current at the value set by IOUT_OC_FAULT_LIMIT without regard to the output voltage.

THIS DOCUMENT IS SUBJECT TO CHANGE WITHOUT NOTICE. THE PRODUCTS DESCRIBED HEREIN AND THIS DOCUMENT ARE SUBJECT TO SPECIFIC DISCLAIMERS, SET FORTH AT www.vishay.com/doc?91000

Supported Commands

OCRSP		OCRTY			OCDLY			DESCRIPTIONS
1	0	1	0	0	0	0	1	The device continues operation for 128 consecutive OC cycles and then shut down. Waiting for 20 ms, it hiccups until the fault condition no longer exists
0	0	0	0	0	0	0	0	The device continues operation
0	0	0	1	0	1	1	0	The device continues operation
0	0	1	0	0	0	1	0	The device continues operation
0	0	1	1	0	1	1	0	The device continues operation
1	1	0	0	0	0	0	0	The device continues operation for 8 consecutive OC cycles and then shut down without delay
1	1	0	1	0	1	1	0	The device continues operation for 32 consecutive OC cycles and then shut down without delay
1	1	1	0	0	0	1	0	The device continues operation for 128 consecutive OC cycles and then shut down without delay.
1	1	1	1	0	1	1	0	The device continues operation for 512 consecutive OC cycles and then shut down without delay
1	1	1	1	1	0	0	0	The device continues operation and never shut down when OCP happens

IOUT_OC_WARN_LIMIT (4Ah)

The IOUT_OC_WARN_LIMIT command sets the value of the output current, in ampere, that causes an output overcurrent warning. This is a read and write register. The IOUT_OC_WARN_LIMIT uses LINEAR11 format, which has two data bytes with an 11-bit two's complement mantissa and a 5-bit two's complement exponent (scaling factor). The 5-bit two's complement exponent of the IOUT_OC_WARN_LIMIT command is constant as 5'b11111, that is, -1 in decimal. The LINEAR11 format of the two data bytes is illustrated in Table - "LINEAR11 Numeric Format Data Bytes".

Bit Description

BITS	SYMBOL	VALUE	ACTION
1 5: 0	Linear 11	F868h	The IOUT_OC_WARN_LIMIT is 52 A SiC450
		F841h	The IOUT_OC_WARN_LIMIT is 32.5 A for SiC451
		F827h	The IOUT_OC_WARN_LIMIT is 19.5 A for SiC453
		F81Fh	The IOUT_OC_WARN_LIMIT is 15.5 A for SiC454

The IOUT_OC_WARN_LIMIT range is 0 A to 127 A, resolution is 0.5 A, and its NVM register default store value is F841h for SiC451 equivalent to 32.5 A. Any commands out of the valid range or with incorrect resolution will be ignored and reported.

OT_FAULT_LIMIT (4Fh)

The OT FAULT LIMIT command sets the temperature of the unit, in degree celsius, at which it should indicate an overtemperature fault. This is a read and write register. The OT_FAULT_LIMIT uses LINEAR11 format, which has two data bytes with an 11- bit two's complement mantissa and a 5- bit two's complement exponent (scaling factor). The 5- bit two's complement exponent of the OT_FAULT_LIMIT command is constant as 5'b00000, that is, 0 in decimal. The LINEAR11 format of the two data bytes is illustrated in Table - "LINEAR11 Numeric Format Data Bytes".

Bit Description

BITS	SYMBOL	VALUE	ACTION
15:0	Linear 11	007Dh	The OT_FAULT_LIMIT is specified as 125 °C

The OT_FAULT_LIMIT range is 0 °C to 150 °C, resolution is 1 °C, and its NVM register default store value is 007Dh equivalent to 125 °C. Any commands out of the valid range or with incorrect resolution will be ignored and reported.

OT_FAULT_RESPONSE (50h)

The OT_FAULT_RESPONSE command instructs the device on what action to take in response to an overtemperature fault. This is a read and write register and the NVM register default store value is F9h.

COMMAND	OT FAULT RESPONSE							
Bit position	7	6	5	4	3	2	1	0
Function	OTRSP		OTRTY			OTDLY		
Default (F9h)	1	1	1	1	1	0	0	1

THIS DOCUMENT IS SUBJECT TO CHANGE WITHOUT NOTICE. THE PRODUCTS DESCRIBED HEREIN AND THIS DOCUMENT ARE SUBJECT TO SPECIFIC DISCLAIMERS, SET FORTH AT www.vishay.com/doc?91000

Supported Commands

OTRSP		OTRTY			OTDLY			DESCRIPTIONS
1	1	1	1	1	0	0	1	The device's output is disabled while the fault is present. Operation resumes and the output is enabled when the fault condition no longer exists. It attempts to restart continuously, without limitation, until it is commanded off (by the EN pin or OPERATION command or both), bias power is removed, or another fault condition causes the unit to shut down
0	0	0	0	0	0	0	0	The device continues operation
0	0	0	1	0	1	1	0	The device continues operation
0	0	1	0	0	0	1	0	The device continues operation
0	0	1	1	0	1	1	0	The device continues operation
1	1	0	0	0	0	0	0	The device's output is disabled while the fault is present. Operation resumes and the output is enabled when the fault condition no longer exists. It does not attempt to restart. The output remains disabled until the fault is cleared
1	1	0	1	0	1	1	0	The device's output is disabled while the fault is present. Operation resumes and the output is enabled when the fault condition no longer exists
1	1	1	0	0	0	1	0	The device's output is disabled while the fault is present. Operation resumes and the output is enabled when the fault condition no longer exists
1	1	1	1	0	1	1	0	The device's output is disabled while the fault is present. Operation resumes and the output is enabled when the fault condition no longer exists

OT_WARN_LIMIT (51h)

The OT_WARN_LIMIT command sets the temperature of the unit, in degree celsius, at which it should indicate an overtemperature warning alarm. This is a read and write register. The OT_WARN_LIMIT uses LINEAR11 format, which has two data bytes with an 11- bit two's complement mantissa and a 5-bit two's complement exponent (scaling factor). The 5-bit two's complement exponent of the OT WARN LIMIT command is constant as 5'b00000, that is, 0 in decimal. The LINEAR11 format of the two data bytes is illustrated in Table - "LINEAR11 Numeric Format Data Bytes".

Bit Description

BITS	SYMBOL	VALUE	ACTION
15 : 0	Linear 11	0069h	The OT_WARN_LIMIT is specified as 105 °C

The OT_WARN_LIMIT range is 0 °C to 150 °C, resolution is 1 °C, and its NVM register default store value is 0069h equivalent to 105 °C. Any commands out of the valid range or with incorrect resolution will be ignored and reported.

VIN_OV_FAULT_LIMIT (55h)

The VIN_OV_FAULT_LIMIT command sets the value of the input voltage, in volt, that causes an input overvoltage fault. This is a read and write register. The VIN_OV_FAULT_LIMIT uses LINEAR11 format, which has two data bytes with an 11-bit two's complement mantissa and a 5 bit two's complement exponent (scaling factor). The 5-bit two's complement exponent of the VIN_OV_FAULT_LIMIT command is constant as 5'b11111, that is, -1 in decimal. The LINEAR11 format of the two data bytes is illustrated in Table - "LINEAR11 Numeric Format Data Bytes".

Bit Description

BITS	SYMBOL	VALUE	ACTION
15 : 0	Linear 11	F81Eh	The VIN_OV_FAULT_LIMIT is specified as 15 V

The VIN_OV_FAULT_LIMIT range is 1 V to 80 V, resolution is 0.5 V, and its NVM register default store value is F81Eh equivalent to 15 V. Any commands out of the valid range or with incorrect resolution will be ignored and reported.

VIN_OV_FAULT_RESPONSE (56h)

The VIN_OV_FAULT_RESPONSE command instructs the device on what action to take in response to an input overvoltage fault. This is a read and write register and the NVM register default store value is B8h.

COMMAND	VIN_OV_FAULT_RESPONSE							
Bit position	7	6	5	4	3	2	1	0
Function	VIOVRSP		VIOVRTY			VIOVDLY		
Default (B8h)	1	0	1	1	1	0	0	0

THIS DOCUMENT IS SUBJECT TO CHANGE WITHOUT NOTICE. THE PRODUCTS DESCRIBED HEREIN AND THIS DOCUMENT ARE SUBJECT TO SPECIFIC DISCLAIMERS, SET FORTH AT www.vishay.com/doc?91000

Supported Commands

OTRSP		OTRTY			OTDLY			DESCRIPTIONS
1	0	1	1	1	0	0	0	This command deviates from standard PMBus 1.3 specifications. The device's output is disabled while the fault is present. Operation resumes and the output is enabled when the fault condition no longer exists. It does not attempt to restart. The output remains disabled until the fault is cleared
0	0	0	0	0	0	0	0	The device continues operation
0	0	0	1	0	1	1	0	The device continues operation
0	0	1	0	0	0	1	0	The device continues operation
0	0	1	1	0	1	1	0	The device continues operation
1	1	0	0	0	0	0	0	The device's output is disabled while the fault is present. Operation resumes and the output is enabled when the fault condition no longer exists. It does not attempt to restart. The output remains disabled until the fault is cleared
1	1	0	1	0	1	1	0	The device's output is disabled while the fault is present. Operation resumes and the output is enabled when the fault condition no longer exists
1	1	1	0	0	0	1	0	The device's output is disabled while the fault is present. Operation resumes and the output is enabled when the fault condition no longer exists
1	1	1	1	0	1	1	0	The device's output is disabled while the fault is present. Operation resumes and the output is enabled when the fault condition no longer exists

VIN_UV_WARN_LIMIT (58h)

The VIN_UV_WARN_LIMIT command sets the value of the input voltage, in volt, that causes an input voltage low warning. This is a read and write register. The VIN_UV_WARN_LIMIT uses LINEAR11 format, which has two data bytes with an 11-bit two's complement mantissa and a 5-bit two's complement exponent (scaling factor). The 5-bit two's complement exponent of the VIN_UV_WARN_LIMIT command is constant as 5'b11111, that is, -1 in decimal. The LINEAR11 format of the two data bytes is illustrated in Table - "LINEAR11 Numeric Format Data Bytes".

Bit Description

BITS	SYMBOL	VALUE	ACTION
15 : 0	Linear 11	F812h	The VIN_UV_WARN_LIMIT is specified as 9 V

The VIN_UV_WARN_LIMIT range is 1 V to 80 V, resolution is 0.5 V, and its NVM register default store value is F812h equivalent to 9 V. Any commands out of the valid range or with incorrect resolution will be ignored and reported.

IIN_OC_WARN_LIMIT (5Dh)

The IIN_OC_WARN_LIMIT command sets the value of the input current, in ampere, that causes an input current overcurrent Warning. This is a read and write register. The IIN_OC_WARN_LIMIT uses LINEAR11 format, which has two data bytes with an 11-bit two's complement mantissa and a 5-bit two's complement exponent (scaling factor). The 5-bit two's complement exponent of the IIN_OC_WARN_LIMIT command is constant as 5'b11111, that is, -1 in decimal. The LINEAR11 format of the two data bytes is illustrated in Table - "LINEAR11 Numeric Format Data Bytes".

Bit Description

BITS	SYMBOL	VALUE	ACTION
15 : 0	Linear 11	F80Ah	The IIN_OC_WARN_LIMIT is specified as 5 A

The IIN_OC_WARN_LIMIT range is 0 A to 127 A, resolution is 0.5 A, and its NVM register default store value is F80Ah equivalent to 5 A. Any commands out of the valid range or with incorrect resolution will be ignored and reported.

POWER_GOOD_ON (5Eh)

The POWER_GOOD_ON command sets the value of the output voltage at which an optional power good signal should be asserted, indicating that the output voltage is valid. This is a read and write register. The POWER_GOOD_ON uses ULINEAR16 format, which is a 16-bit unsigned integer according to the setting of the VOUT_MODE command.

Bit Description

BITS	SYMBOL	VALUE	ACTION
15 : 0	Ulinear 16	0114h	The POWER_GOOD_ON is specified as 0.54 V

The POWER_GOOD_ON range is 0.24 V to 14 V, resolution is 1.953 mV, and its NVM register default store value is 0114h equivalent to 0.54 V.

POWER_GOOD_OFF (5Fh)

The POWER_GOOD_OFF command sets the value of the output voltage at which an optional power good signal should be negated, indicating that the output voltage is not valid. This is a read and write register. The POWER_GOOD_OFF uses ULINEAR16 format, which is a 16-bit unsigned integer according to the setting of the VOUT_MODE command.

THIS DOCUMENT IS SUBJECT TO CHANGE WITHOUT NOTICE. THE PRODUCTS DESCRIBED HEREIN AND THIS DOCUMENT ARE SUBJECT TO SPECIFIC DISCLAIMERS, SET FORTH AT www.vishay.com/doc?91000

Bit Description

BITS	SYMBOL	VALUE	ACTION
15 : 0	Ulinear 16	0105h	The POWER_GOOD_OFF is specified as 0.51 V

The POWER_GOOD_OFF range is 0.24 V to 14 V, resolution is 1.953 mV, and its NVM register default store value is 0105h equivalent to 0.51 V.

TON_DELAY(60h)

The TON_DELAY command sets the time, in millisecond, from which a start condition is received (as programmed by the ON_OFF_CONFIG command) until the output voltage starts to rise. This is a read and write register. The TON_DELAY uses LINEAR11 format, which has two data bytes with an 11-bit two's complement mantissa and a 5-bit two's complement exponent (scaling factor). The 5 bit two's complement exponent of the TON_DELAY command is constant as 5'b0000, that is, 0 in decimal. The LINEAR11 format of the two data bytes is illustrated in Table - "LINEAR11 Numeric Format Data Bytes".

Bit Description

BITS	SYMBOL	VALUE	ACTION
15 : 0	Linear 11	0000h	The TON_DELAY is specified as 0 ms

The TON_DELAY range is 0 ms to 127 ms, resolution is 1 ms, and its NVM register default store value is 0000h equivalent to 0 ms. Any commands out of the valid range or with incorrect resolution will be ignored and reported.

TON_RISE (61h)

The TON_RISE command sets the time, in millisecond, from when the output starts to rise until the voltage has entered the regulation band. This is a read and write register. The TON_RISE uses LINEAR11 format, which has two data bytes with an 11-bit two's complement mantissa and a 5-bit two's complement exponent (scaling factor). The 5-bit two's complement exponent of the TON_RISE command is constant as 5'b0000, that is, 0 in decimal. The LINEAR11 format of the two data bytes is illustrated in Table - "LINEAR11 Numeric Format Data Bytes".

Bit Description

BITS	SYMBOL	VALUE	ACTION
15 : 0	Linear 11	0005h	The TON_RISE is specified as 5 ms

The TON_RISE range is 0 ms to 127 ms, resolution is 1 ms, and its NVM register default store value is 0005h equivalent to 5 ms. Any commands out of the valid range or with incorrect resolution will be ignored and reported.

TON_MAX_FAULT_LIMIT (62h)

The TON_MAX_FAULT_LIMIT command sets an upper limit, in millisecond, on how long the unit can attempt to power up the output without reaching the output undervoltage fault limit. This is a read and write register. The TON_MAX_FAULT_LIMIT uses LINEAR11 format, which has two data bytes with an 11-bit two's complement mantissa and a 5-bit two's complement exponent (scaling factor). The 5-bit two's complement exponent of the TON_MAX_FAULT_LIMIT command is constant as 5'b0000, that is, 0 in decimal. The LINEAR11 format of the two data bytes is illustrated in Table - "LINEAR11 Numeric Format Data Bytes".

Bit Description

BITS	SYMBOL	VALUE	ACTION
15 : 0	Linear 11	0014h	The TON_MAX_FAULT_LIMIT is specified as 20 ms

The TON_MAX_FAULT_LIMIT range is 0 ms to 127 ms, resolution is 1 ms, and its NVM register default store value is 0014h equivalent to 20 ms. Any commands out of the valid range or with incorrect resolution will be ignored and reported.

TON_MAX_FAULT_RESPONSE (63h)

The TON_MAX_FAULT_RESPONSE command instructs the device on what action to take in response to an input overcurrent fault. This is a read and write register and the NVM register default store value is B9h.

COMMAND	TON_MAX_FAULT_RESPONSE							
Bit position	7	6	5	4	3	2	1	0
Function	ONMXRSP		ONMXRTY			ONMXDLY		
Default (0xB9h)	1	0	1	1	1	0	0	1

THIS DOCUMENT IS SUBJECT TO CHANGE WITHOUT NOTICE. THE PRODUCTS DESCRIBED HEREIN AND THIS DOCUMENT ARE SUBJECT TO SPECIFIC DISCLAIMERS, SET FORTH AT www.vishay.com/doc?91000

Supported Commands

ONMXRSP		ONMXRTY			ONMXDLY			DESCRIPTIONS
1	0	1	1	1	0	0	1	The device shuts down (disables the output). It attempts to restart continuously, without limitation, until it is commanded off (by the EN pin or OPERATION command or both), bias power is removed, or another fault condition causes the unit to shut down. 20 ms delay
1	0	0	0	0	0	0	0	The device shuts down (disables the output). It does not attempt to restart. The output remains disabled until the fault is cleared
1	0	0	0	0	0	1	1	The device shuts down (disables the output). It does not attempt to restart. The output remains disabled until the fault is cleared
1	0	0	0	0	1	1	0	The device shuts down (disables the output). It does not attempt to restart. The output remains disabled until the fault is cleared
1	0	0	0	1	0	0	0	The device shuts down (disables the output). It attempts to restart 1 time. No delay
1	0	0	0	1	0	0	1	The device shuts down (disables the output). It attempts to restart 1 time. 20 ms delay
1	0	0	0	1	0	1	0	The device shuts down (disables the output). It attempts to restart 1 time. 30 ms delay
1	0	0	0	1	0	1	1	The device shuts down (disables the output). It attempts to restart 1 time. 40 ms delay

TOFF_DELAY (64h)

The TOFF_DELAY command sets the time, in millisecond, from when a stop condition is received until the unit stops transferring energy to the output. This is a read and write register. The TOFF_DELAY uses LINEAR11 format, which has two data bytes with an 11-bit two's complement mantissa and a 5-bit two's complement exponent (scaling factor). The 5-bit two's complement exponent of the TOFF_DELAY command is constant as 5'b0000, that is, 0 in decimal. The LINEAR11 format of the two data bytes is illustrated in Table - "LINEAR11 Numeric Format Data Bytes".

Bit Description

BITS	SYMBOL	VALUE	ACTION
15 : 0	Linear 11	0000h	The TOFF_DELAY is specified as 0 ms

The TOFF_DELAY range is 0 ms to 127 ms, resolution is 1 ms, and its NVM register default store value is 0000h equivalent to 0 ms. Any commands out of the valid range or with incorrect resolution will be ignored and reported.

TOFF_FALL (65h)

The TOFF_FALL command sets the time, in millisecond, from the end of the turn-off delay time until the voltage is commanded to zero. Note that this command can only be used with a device whose output can sink enough current to cause the output voltage to decrease at a controlled rate. This is a read and write register. The TOFF_FALL uses LINEAR11 format, which has two data bytes with an 11-bit two's complement mantissa and a 5-bit two's complement exponent (scaling factor). The 5-bit two's complement exponent of the TOFF_FALL command is constant as 5'b0000, that is, 0 in decimal. The LINEAR11 format of the two data bytes is illustrated in Table - "LINEAR11 Numeric Format Data Bytes".

Bit Description

BITS	SYMBOL	VALUE	ACTION
15 : 0	Linear 11	0005h	The TOFF_FALL is specified as 5 ms

The TOFF_FALL range is 0 ms to 127 ms, resolution is 1 ms, and its NVM register default store value is 0005h equivalent to 5 ms. Any commands out of the valid range or with incorrect resolution will be ignored and reported.

TOFF_MAX_WARN_LIMIT (66h)

The TOFF_MAX_WARN_LIMIT command sets an upper limit, in millisecond, on how long the unit can attempt to power down the output without reaching 12.5 % of the output voltage programmed at the time the unit is turned off. This is a read and write register. The TOFF_MAX_WARN_LIMIT uses LINEAR11 format, which has two data bytes with an 11-bit two's complement mantissa and a 5-bit two's complement exponent (scaling factor). The 5- bit two's complement exponent of the TOFF_MAX_WARN_LIMIT command is constant as 5'b0000, that is, 0 in decimal. The LINEAR11 format of the two data bytes is illustrated in Table - "LINEAR11 Numeric Format Data Bytes".

Bit Description

BITS	SYMBOL	VALUE	ACTION
15 : 0	Linear 11	003Ch	The TOFF_MAX_WARN_LIMIT is specified as 60 ms

The TOFF_MAX_WARN_LIMIT range is 0 ms to 127 ms, resolution is 1 ms, and its NVM register default store value is 003Ch equivalent to 60 ms. Any commands out of the valid range or with incorrect resolution will be ignored and reported.

THIS DOCUMENT IS SUBJECT TO CHANGE WITHOUT NOTICE. THE PRODUCTS DESCRIBED HEREIN AND THIS DOCUMENT ARE SUBJECT TO SPECIFIC DISCLAIMERS, SET FORTH AT www.vishay.com/doc?91000

STATUS_BYTE (78h)

The STATUS_BYTE command returns one byte of information with a summary of the most critical faults. The STATUS_BYTE message content is described in the table below. This is a read register.

Table - STATUS_BYTE Message Contents

BIT	STATUS BIT NAME	MEANING
7	BUSY	A fault was declared because the device was busy and unable to respond
6	OFF	This bit is asserted if the unit is not providing power to the output, regardless of the reason, including simply not being enabled
5	VOUT_OV_FAULT	An output overvoltage fault has occurred
4	IOUT_OC_FAULT	An output overcurrent fault has occurred
3	VIN_UV_FAULT	An input undervoltage fault has occurred
2	Temperature	A temperature fault or warning has occurred
1	CML	A communications, memory or logic fault has occurred
0	None of the above	A fault or warning not listed in bits (7 to 1) has occurred

STATUS_WORD (79h)

The STATUS_WORD command returns two bytes of information with a summary of the unit's fault condition. Based on the information in these bytes, the host can get more information by reading the appropriate status registers. The low byte of the status word is the same register as the STATUS_BYTE command. The STATUS_WORD message content is described in the following table. This is a read register.

BYTE	BIT	STATUS BIT NAME	MEANING
Low	7	Busy	A fault was declared because the device was busy and unable to respond
	6	OFF	This bit is asserted if the unit is not providing power to the output, regardless of the reason, including simply not being enabled
	5	VOUT_OV_FAULT	An output overvoltage fault has occurred
	4	IOUT_OC_FAULT	An output overcurrent fault has occurred
	3	VIN_UV_FAULT	An input undervoltage fault has occurred
	2	Temperature	A temperature fault or warning has occurred
	1	CML	A communications, memory or logic fault has occurred
	0	None of the above	A fault or warning not listed in bits [7 : 1] has occurred
High	7	V_{OUT}	An output voltage fault or warning has occurred
	6	I_{OUT} / P_{OUT}	An output current or output power fault or warning has occurred
	5	Input	An input voltage, input current, or input power fault or warning has occurred
	4	MFR specific	A manufacturer specific fault or warning has occurred
	3	P_G status #	The power good signal, if present, is negated
	2	Fans	Not available
	1	Other	Not available
	0	Unknown	Not available

STATUS_VOUT (7Ah)

The STATUS_VOUT command returns one byte with contents described in the following table. This is a read register.

BIT	MEANING
7	V_{OUT} OV fault (output overvoltage fault)
6	V_{OUT} OV warning (output overvoltage warning)
5	V_{OUT} UV warning (output undervoltage warning)
4	V_{OUT} OV fault (output undervoltage fault)
3	V_{OUT} max. min. (an attempt has been made to set the output voltage toa value higher than allowed by the V_{OUT} max. or lower than the limited allowed by the V_{OUT} min.)
2	t_{ON} max. fault (output overvoltage fault)
1	t_{OFF} max. warning (output overvoltage fault)
0	Not available

THIS DOCUMENT IS SUBJECT TO CHANGE WITHOUT NOTICE. THE PRODUCTS DESCRIBED HEREIN AND THIS DOCUMENT ARE SUBJECT TO SPECIFIC DISCLAIMERS, SET FORTH AT www.vishay.com/doc?91000

STATUS_IOUT (7Bh)

The STATUS_IOUT command returns one byte with contents described in the following table. This is a read register.

BIT	MEANING
7	I_{OUT} OC fault (output overcurrent fault)
6	Not available
5	I_{OUT} OC warning (output overcurrent warning)
4	Not available
3	Not available
2	Not available
1	Not available
0	Not available

STATUS_INPUT (7Ch)

The STATUS_INPUT command returns one byte with contents described in the following table. This is a read register.

BIT	MEANING
7	V_{IN} OV fault (input overvoltage fault)
6	Not available
5	V_{IN} UV warning (input undervoltage warning)
4	Not available
3	Unit off for insufficient input voltage
2	Not available
1	I_{IN} OC warning (input overcurrent warning)
0	Not available

STATUS_TEMPERATURE (7Dh)

The STATUS_TEMPERATURE command returns one byte with contents described in the following table. This is a read register.

BIT	MEANING
7	OT fault (overtemperature fault)
6	OT warning (overtemperature warning)
5 to 0	Not available

STATUS_CML (7Eh)

The STATUS_CML command returns one byte with contents described in the following table. This is a read register.

BIT	MEANING
7	Invalid or unsupported command received
6	Invalid or unsupported data received
5	Packet error check failed
4	Memory fault detected
3	Not available
2	Reserved
1	A communication fault other than the ones listed in this table has occurred
0	Not available

STATUS_MFR Specific (80h)

The STATUS_MFR specific command returns one byte with contents described in the following table. This is a read register.

BIT	MEANING
7 to 4	Not available
3	IL master fault
2	YF verify fault
1	YF erase fault
0	YF PGM fault

THIS DOCUMENT IS SUBJECT TO CHANGE WITHOUT NOTICE. THE PRODUCTS DESCRIBED HEREIN AND THIS DOCUMENT ARE SUBJECT TO SPECIFIC DISCLAIMERS, SET FORTH AT www.vishay.com/doc?91000

READ_VIN (88h)

The READ_VIN command returns the input voltage in volt. The two data bytes are encoded in LINEAR11 format. The LINEAR11 format of the two data bytes is illustrated in Table - “LINEAR11 Numeric Format Data Bytes”. This is a read register.

READ_IIN (89h)

The READ_IIN command returns the input current in ampere. The two data bytes in this register are encoded in unsigned LINEAR11 format, ULINEAR11. The ULINEAR11 has the format shown in “Table - ULINEAR11 Format” Table - ULINEAR11 Format

COMMAND EXAMPLE	READ_IIN															
Bit position	15	14	13	12	11	10	9	8	7	6	5	4	3	2	1	0
Function	Two’s compliment exponent, N						Integer, M									

The relation between N, M and real-world value, X is:

$$X = M \times 2^{N}$$

For example, an input current of 0.501 A will return a value of AC03h in ULINEAR11 format when READ_IIN is implemented.

Bit position	15	14	13	12	11	10	9	8	7	6	5	4	3	2	1	0
Data	1	0	1	0	1	1	0	0	0	0	0	0	0	0	1	1
Function	Two’s compliment exponent, N						Integer, M									

In this case, M = 1027, N = -11 and X = 0.50146

READ_VOUT (8Bh)

The read V_{OUT} command returns the actual, measured output voltage in volt. The two data bytes are encoded in ULINEAR16 format, which is a 16 bit unsigned integer according to the setting of the VOUT_MODE command. This is a read register.

READ_IOUT (8Ch)

The READ_IOUT command returns the output current in ampere. The two data bytes are encoded in ULINEAR11 format. The ULINEAR11 format of the two data bytes is illustrated in Table - “ULINEAR11 Format”. This is a read register.

READ_TEMPERATURE (8Dh)

The READ_TEMPERATURE command returns the measured temperature of the PMBus unit in degree celsius. The two data bytes are encoded in LINEAR11 format. The LINEAR11 format of the two data bytes is illustrated in Table - “LINEAR11 Numeric Format Data Bytes”. This is a read register.

READ_DUTY_CYCLE (94h)

The READ_DUTY_CYCLE command returns the duty of the PMBus unit’s power conversion in percent. The two data bytes are encoded in LINEAR11 format. The LINEAR11 format of the two data bytes is illustrated in Table - “LINEAR11 Numeric Format Data Bytes”. This is a read register.

READ_POUT (96h)

The READ_POUT command returns the output power in watt. The two data bytes are encoded in ULINEAR11 format. The ULINEAR11 format of the two data bytes is illustrated in Table - “ULINEAR11 Format”. This is a read register.

READ_PIN (97h)

The READ_PIN command returns the input power in watt. The two data bytes are encoded in ULINEAR11 format. The ULINEAR11 format of the two data bytes is illustrated in Table - “ULINEAR11 Format”. This is a read register.

PMBus_REVISION (98h)

The PMBUS_REVISION command stores or reads the revision of the PMBus to which the device is compliant. The command has one data byte. Bits (7 to 4) indicate the revision of PMBus specification Part I to which the device is compliant. Bits (3 to 0) indicate the revision of PMBus specification part II to which the device is compliant. The permissible values are shown in the table below. This is a read register.

Table - PMBUS_REVISION DATA Byte Contents

BITS (7 TO 4)	PART I REVISION	BIT (3 TO 0)	PART II REVISION
0000b	1.0	0000b	1.0
0001b	1.1	0001b	1.1
0010b	1.2	0010b	1.2
0011b	1.3	0011b	1.3

THIS DOCUMENT IS SUBJECT TO CHANGE WITHOUT NOTICE. THE PRODUCTS DESCRIBED HEREIN AND THIS DOCUMENT ARE SUBJECT TO SPECIFIC DISCLAIMERS, SET FORTH AT www.vishay.com/doc?91000

MFR_SERIAL (9Eh)

The MFR_SERIAL command is used to store user's customized information. This is a read and write 16-bit block register.

Bit Description

BITS	SYMBOL	VALUE	ACTION
15 to 0	Block	0000h	A block register to store user's customized information

IC_DEVICE_ID (ADh)

The IC_DEVICE_ID command is used to either set or read the type or part number of an IC embedded within a PMBus that is used for the PMBus interface. Each manufacturer uses the format of their choice for the IC device identification. IC_DEVICE_ID is typically only set once, at the time of manufacture.

Bit Description

BITS	SYMBOL	VALUE	ACTION
15 to 0	Block	0000h	The part number of the unit

EEPROM_PASSWORD (DBh)

The EEPROM_PASSWORD command will unlock write access to the internal NVM. This command must be sent before the STORE_USER_ALL command. Access to the NVM can be disabled by sending any other data and will be automatically disabled on each power-cycle.

Bit Description

BITS	SYMBOL	VALUE	ACTION
15 to 0	Block	1234h	Default password for unlocking access to the NVM before the STORE_USER_ALL command

MFR_BASE_ADDRESS (D7h) and MFR_BASE_ADDRESS_2 (E2h)

The data in either the MFR_BASE_ADDRESS (D7h) or MFR_BASE_ADDRESS_2 (E2h) register is used along with data from ADDR resistor and V_{SET} setting to generate the device's PMBUS address, which consists of 7 bits. Its most significant 3 bits are contributed by bits 6 to 4 of either MFR_BASE_ADDRESS register or MFR_BASE_ADDRESS_2 register, and its least significant 4 bits come from the data determined by the resistor connected to ADDR pin. When V_{SET} pin is shorted or connected to AGND via a resistor, MFR_BASE_ADRESS register will be used to set bits 6 - 4. MFR_BASE_ADDRESS register has a default value of 10 h and MFR_BASE:ADDRESS_" register 50 h. Both register can be READ or WRITTEN.

Here shows 2 examples.

1. Assume V_{SET} pin is shorted or connected to AGND via a resistor, and a 4.75 kΩ resistor is connected between ADDR pin and AGND, which corresponds to an address offset of 07 h, then MFR_BASE_ADDRESS register will be used to set the PBMBUS address, which is 17 h.

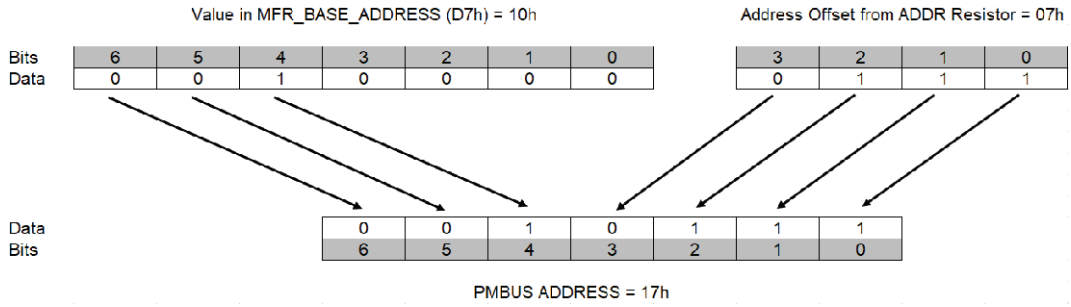

2. Assume V_{SET} pin is floating, and a 7.87 kΩ resistor is connected between ADDR pin and AGND, which corresponds to an address offset of 0 Bh, then MFR_BASE_ADRESS_2 register will be used to set the PMBUS address, which is 5 Bh.

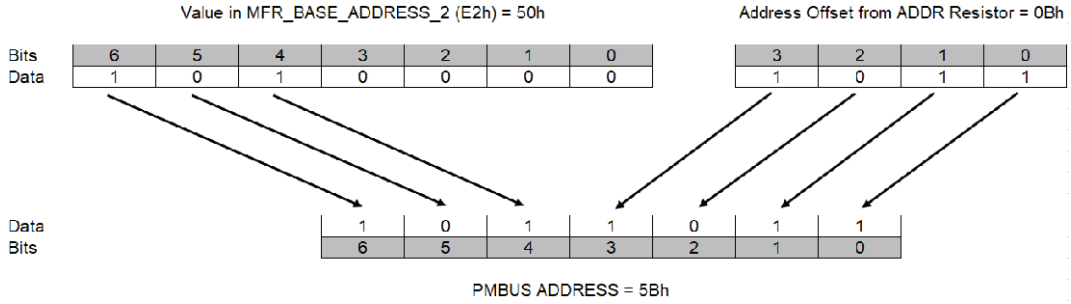

For technical questions, contact: powerictechsupport@vishay.com
THIS DOCUMENT IS SUBJECT TO CHANGE WITHOUT NOTICE. THE PRODUCTS DESCRIBED HEREIN AND THIS DOCUMENT ARE SUBJECT TO SPECIFIC DISCLAIMERS, SET FORTH AT www.vishay.com/doc?91000

ELECTRICAL CHARACTERISTICS (V_{IN} = 12 V, V_{OUT} = 3.3 V, f_{sw} = 600 kHz, unless otherwise noted)

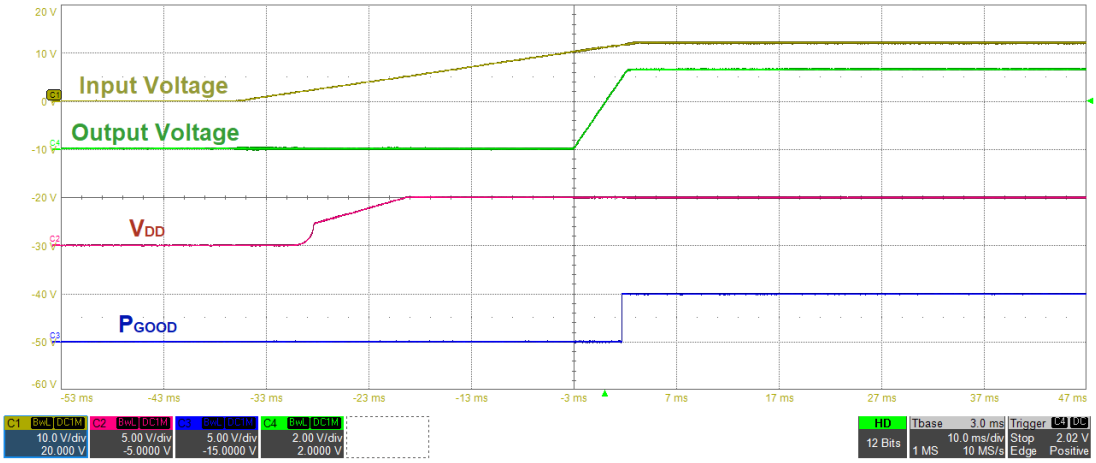

Fig. 11 - Startup with V_{IN}, No Load (10 ms/div)

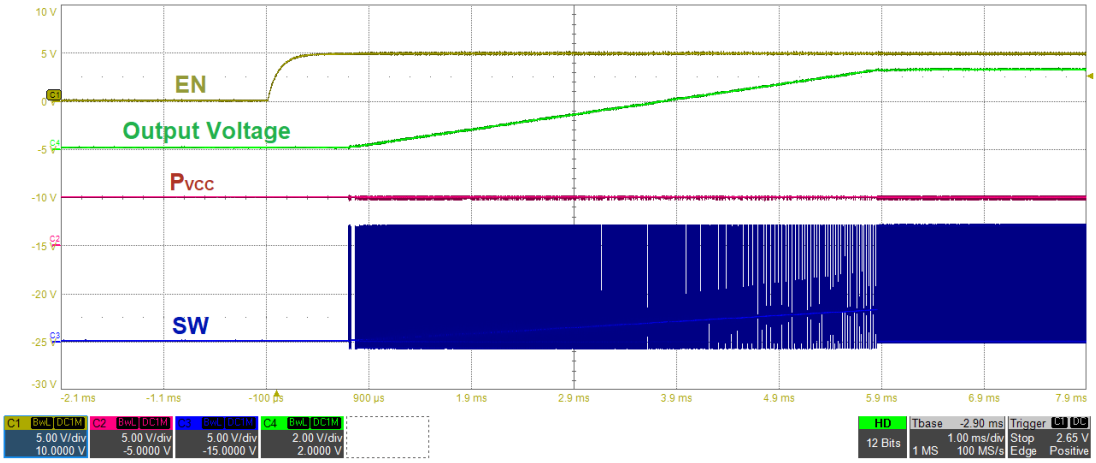

Fig. 12 - Startup with EN, No Load (1 ms/div)

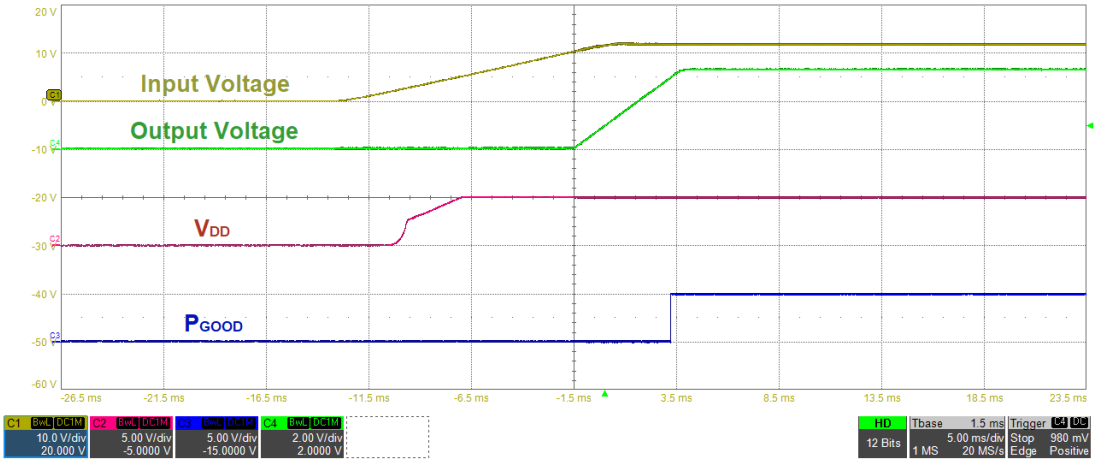

Fig. 13 - Startup with V_{IN}, 12 A Load (5 ms/div)

THIS DOCUMENT IS SUBJECT TO CHANGE WITHOUT NOTICE. THE PRODUCTS DESCRIBED HEREIN AND THIS DOCUMENT ARE SUBJECT TO SPECIFIC DISCLAIMERS, SET FORTH AT www.vishay.com/doc?91000

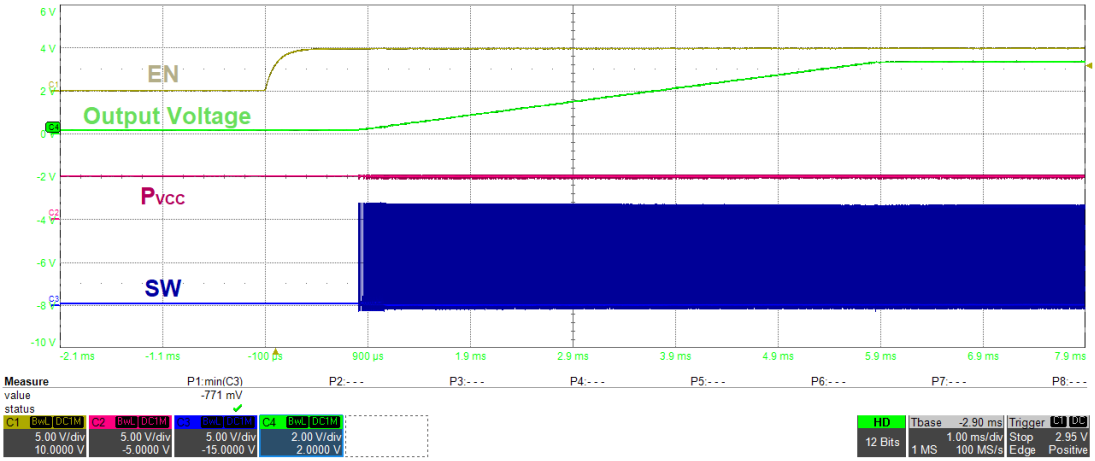

Fig. 14 - Startup with EN, 12 A Load (5 ms/div)

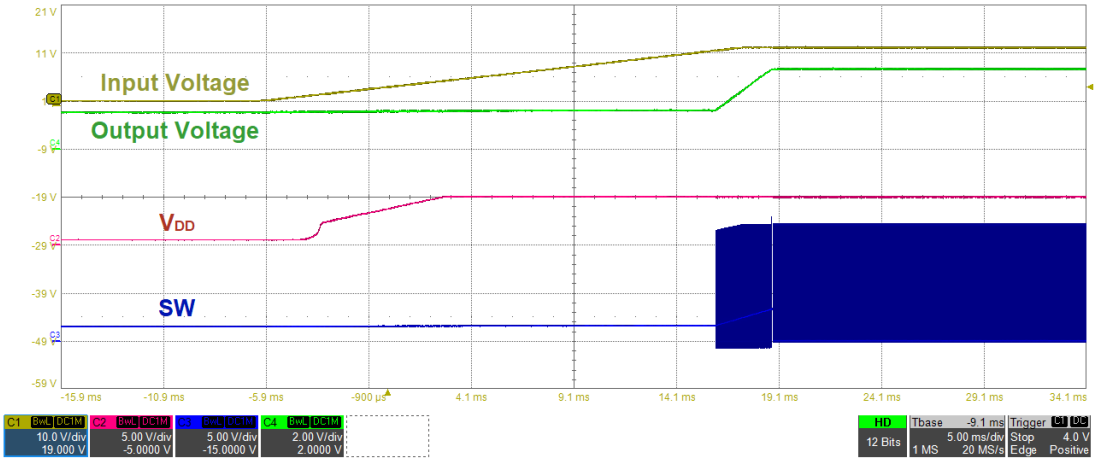

Fig. 15 - 1.5 V Pre-biased Startup with V_{IN}, No Load (5 ms/div)

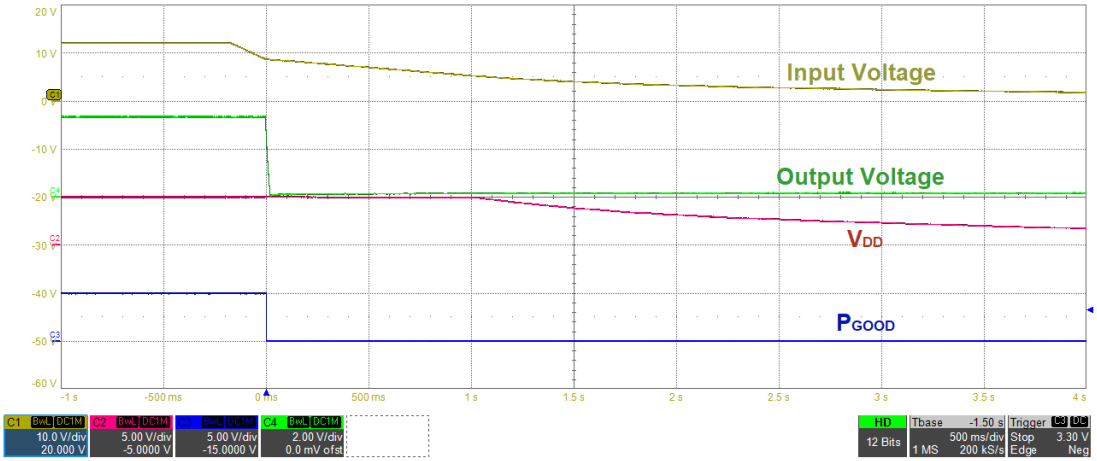

Fig. 16 - Shutdown with V_{IN}, No Load (500 ms/div)

For technical questions, contact: powerictechsupport@vishay.com
THIS DOCUMENT IS SUBJECT TO CHANGE WITHOUT NOTICE. THE PRODUCTS DESCRIBED HEREIN AND THIS DOCUMENT ARE SUBJECT TO SPECIFIC DISCLAIMERS, SET FORTH AT www.vishay.com/doc?91000

ELECTRICAL CHARACTERISTICS (V_{IN} = 12 V, V_{OUT} = 3.3 V, f_{sw} = 600 kHz, unless otherwise noted)

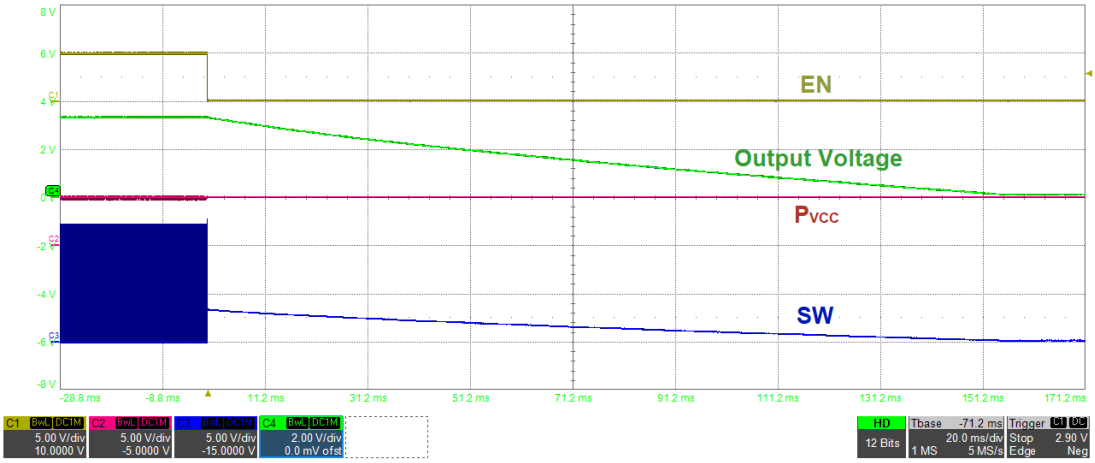

Fig. 17 - Shutdown with EN, No Load (20 ms/div)

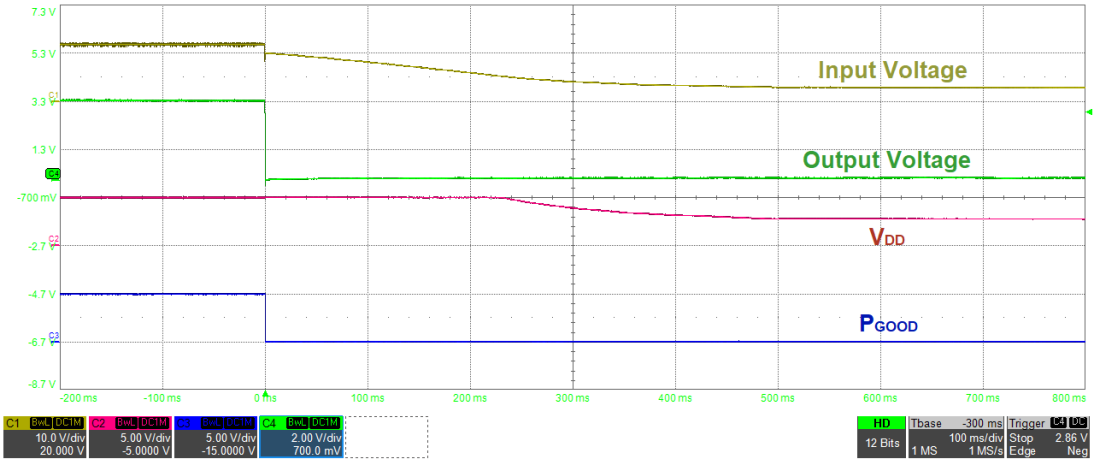

Fig. 18 - Shutdown with V_{IN}, 12 A Load (100 ms/div)

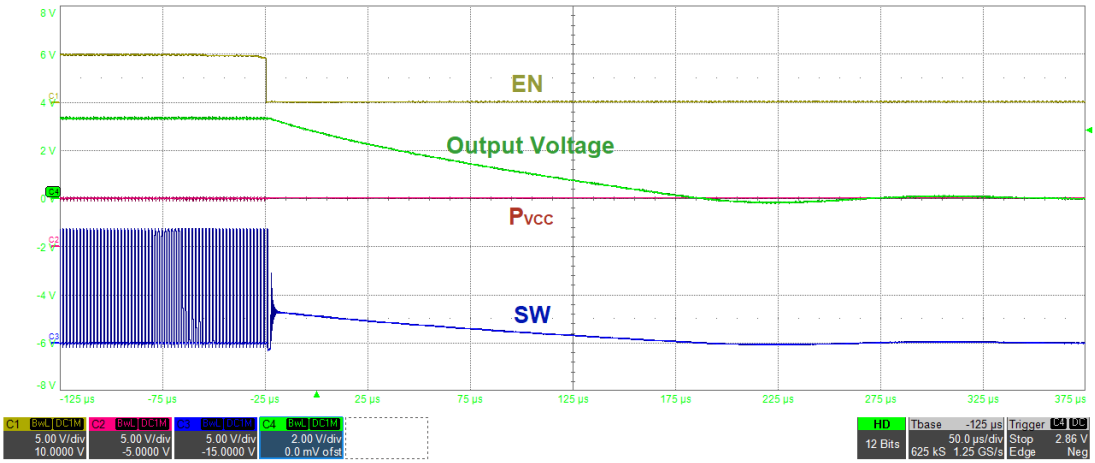

Fig. 19 - Shutdown with EN, 12 A Load (50 µs/div)

THIS DOCUMENT IS SUBJECT TO CHANGE WITHOUT NOTICE. THE PRODUCTS DESCRIBED HEREIN AND THIS DOCUMENT ARE SUBJECT TO SPECIFIC DISCLAIMERS, SET FORTH AT www.vishay.com/doc?91000

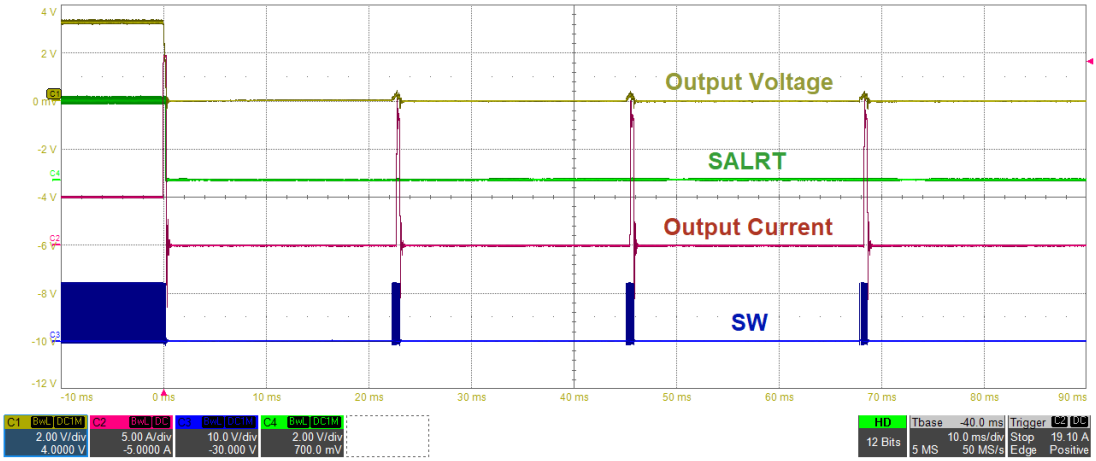

Fig. 20 - Overcurrent Protection (10 ms/div)

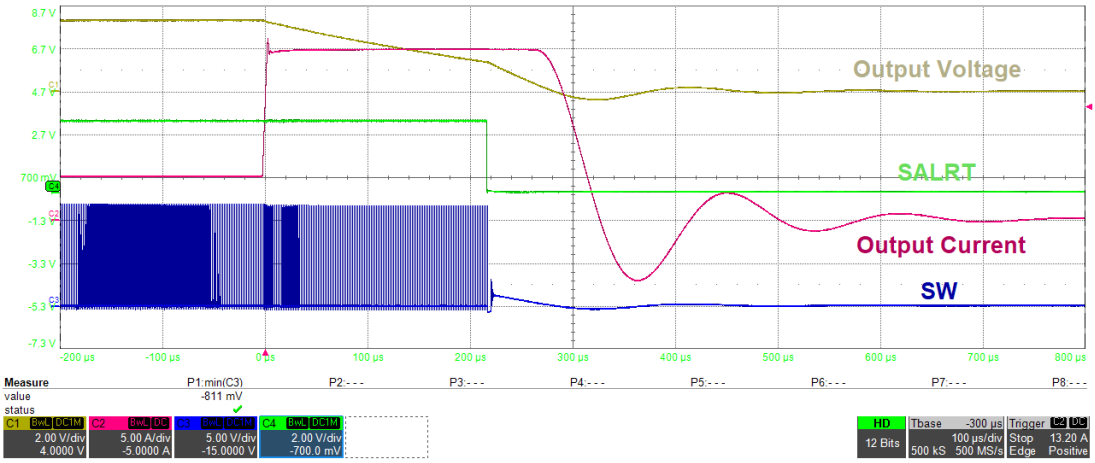

Fig. 21 - Overcurrent Protection (100 µs/div)

THIS DOCUMENT IS SUBJECT TO CHANGE WITHOUT NOTICE. THE PRODUCTS DESCRIBED HEREIN AND THIS DOCUMENT ARE SUBJECT TO SPECIFIC DISCLAIMERS, SET FORTH AT www.vishay.com/doc?91000

ELECTRICAL CHARACTERISTICS (V_{IN} = 12 V, V_{OUT} = 3.3 V, f_{sw} = 600 kHz, unless otherwise noted)

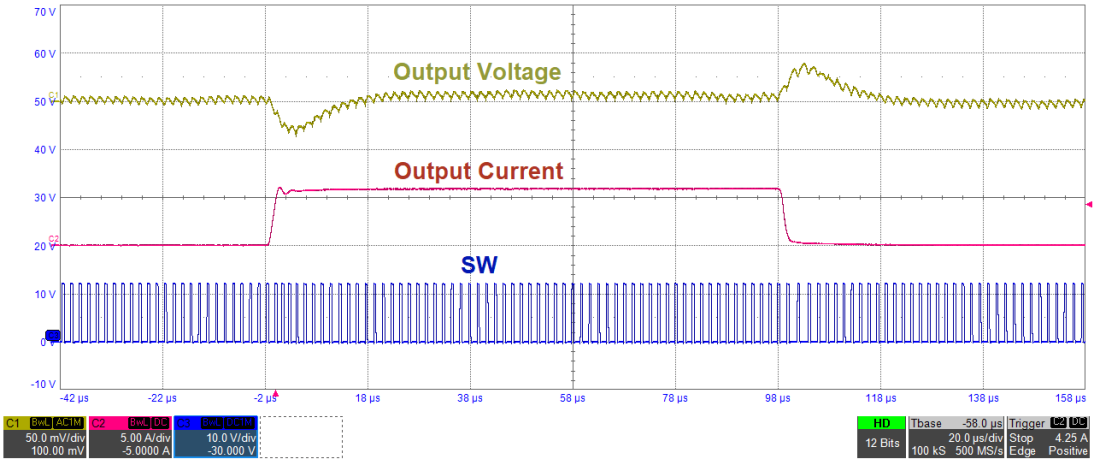

Fig. 22 - Load Step between 0 A and 6 A in CCM (20 µs/div)

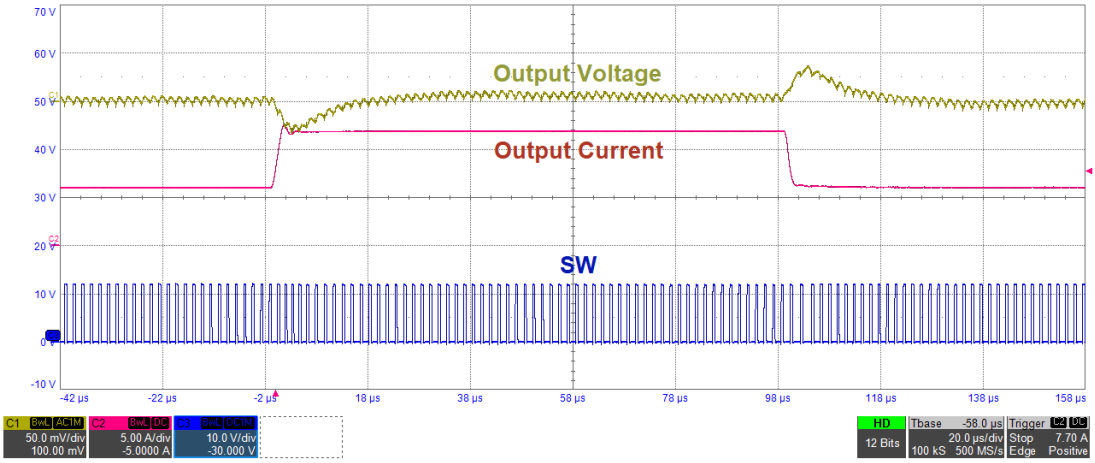

Fig. 23 - Load Step between 6 A and 12 A in CCM (20 µs/div)

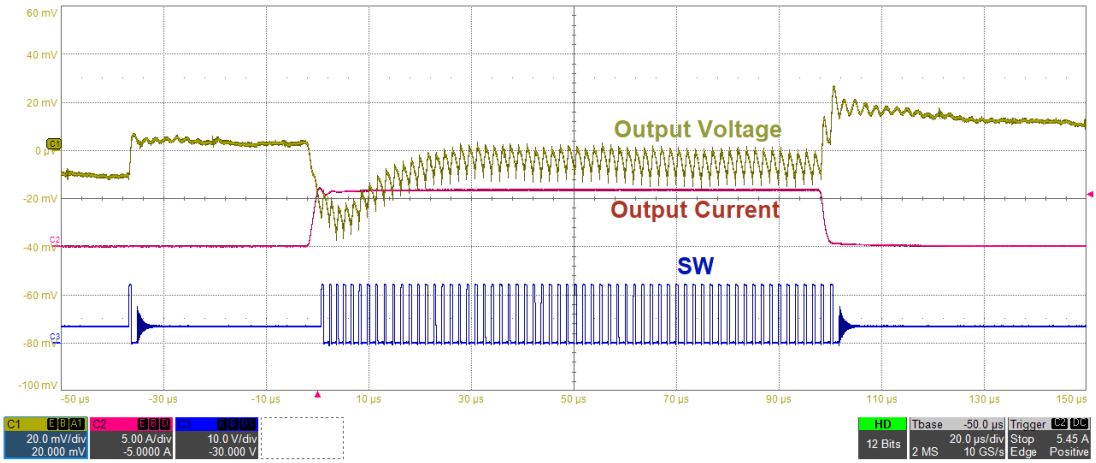

Fig. 24 - Load Step between 0 A and 6 A in DCM (20 µs/div)

For technical questions, contact: powerictechsupport@vishay.com
THIS DOCUMENT IS SUBJECT TO CHANGE WITHOUT NOTICE. THE PRODUCTS DESCRIBED HEREIN AND THIS DOCUMENT ARE SUBJECT TO SPECIFIC DISCLAIMERS, SET FORTH AT www.vishay.com/doc?91000

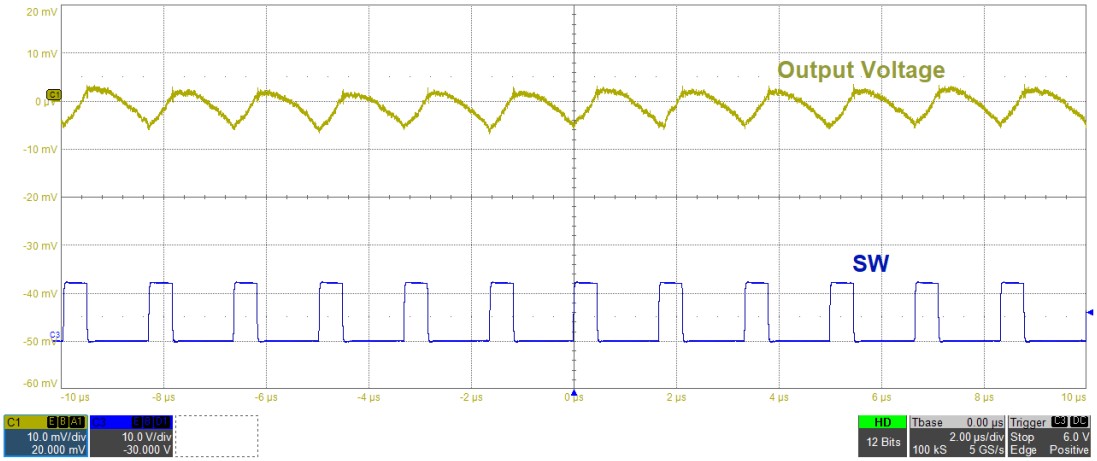

Fig. 25 - Steady State, No Load in CCM (2 µs/div)

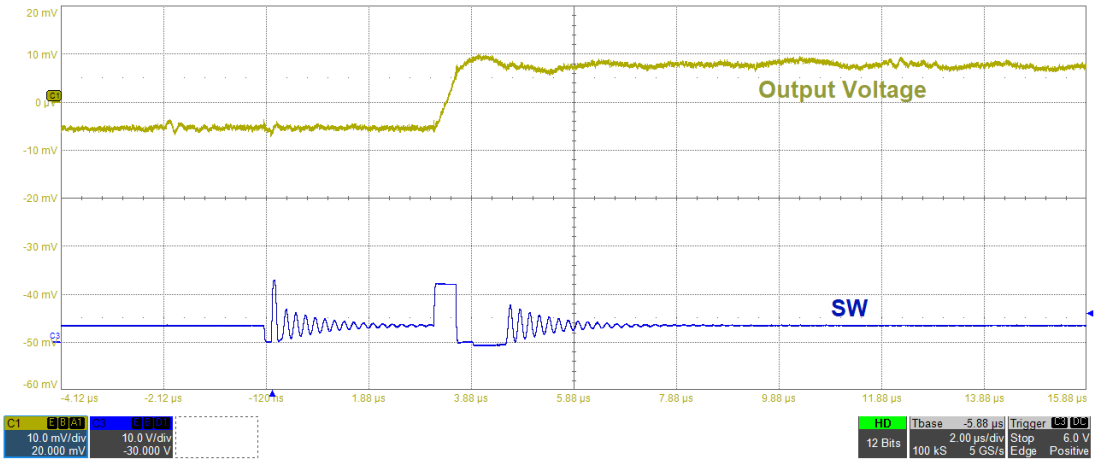

Fig. 26 - Steady State, No Load in DCM (2 µs/div)

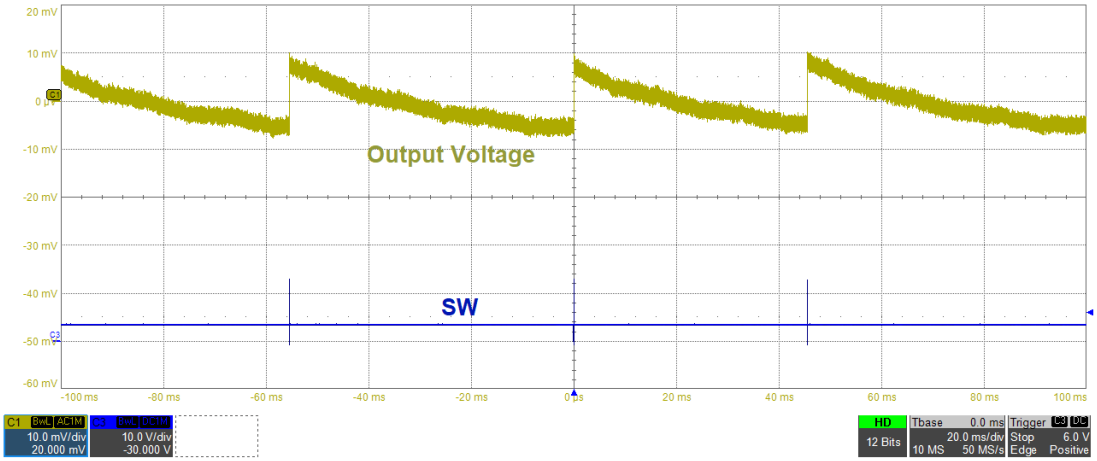

Fig. 27 - Steady State, No Load in DCM (20 ms/div)

THIS DOCUMENT IS SUBJECT TO CHANGE WITHOUT NOTICE. THE PRODUCTS DESCRIBED HEREIN AND THIS DOCUMENT ARE SUBJECT TO SPECIFIC DISCLAIMERS, SET FORTH AT www.vishay.com/doc?91000

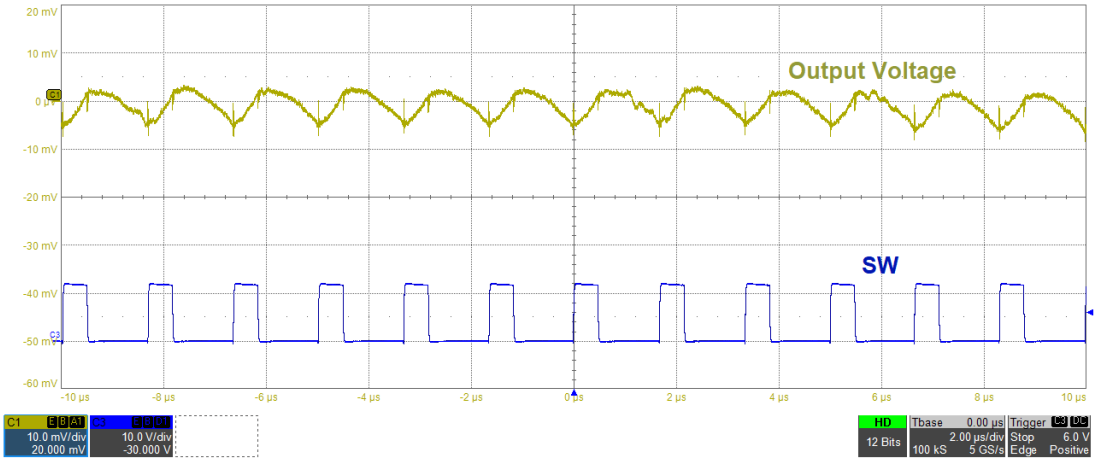

Fig. 28 - Steady State, 12 A Load (2 µs/div)

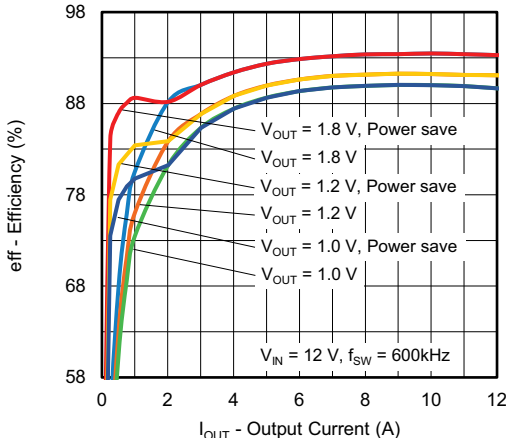

Fig. 29 - SiC454 Efficiency Curve

For technical questions, contact: powerictechsupport@vishay.com
THIS DOCUMENT IS SUBJECT TO CHANGE WITHOUT NOTICE. THE PRODUCTS DESCRIBED HEREIN AND THIS DOCUMENT ARE SUBJECT TO SPECIFIC DISCLAIMERS, SET FORTH AT www.vishay.com/doc?91000

PCB LAYOUT RECOMMENDATIONS

Step 1: V_{IN}/GND Planes and Decoupling

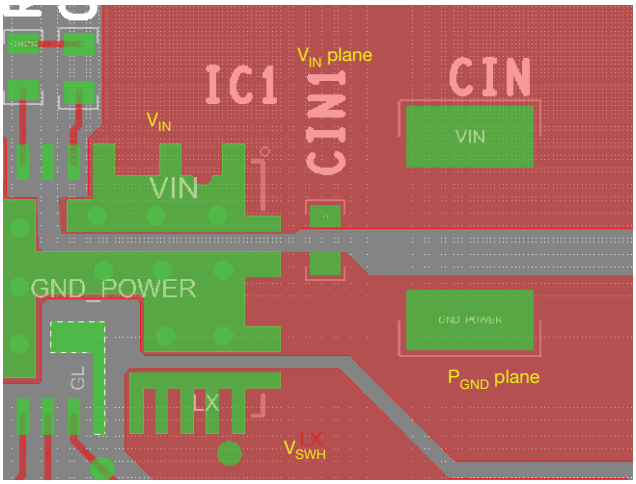

Fig. 30

1. Layout V_{IN} and P_{GND} planes as shown above
2. Ceramic capacitors should be placed right between V_{IN} and P_{GND}, and very close to the device for best decoupling effect
3. Difference values / packages of ceramic capacitors should be used to cover entire decoupling spectrum e.g. 1210 and 0603
4. Smaller capacitance value, closer to device V_{IN} pin(s) - better high frequency noise absorbing

Step 2: V_{IN} Pin

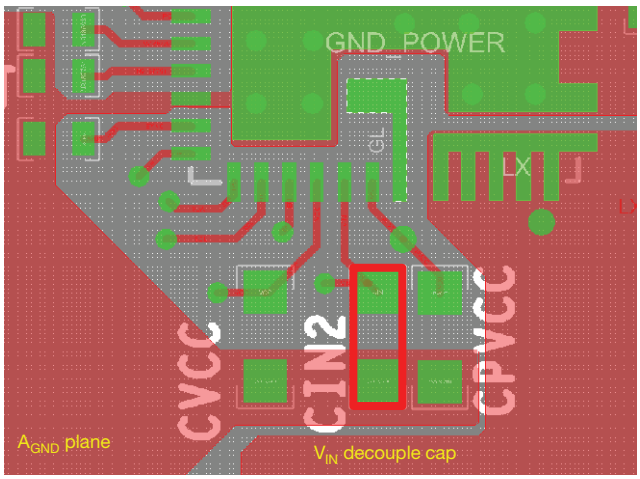

Fig. 31

1. V_{IN} (pin 23) is the input pin for both internal LDO and t_{ON} block. t_{ON} time varies based on input voltage. It is necessary to put a decouple cap close to this pin

Step 3: V_{SWH} Plane

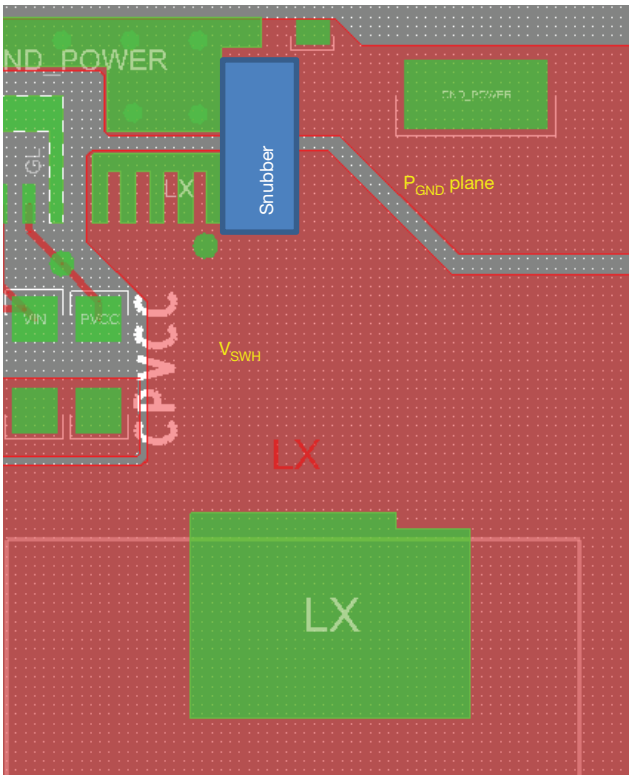

Fig. 32

1. Connect output inductor to SiC454 with large plane to lower the resistance
2. If any snubber network is required, place the components on the bottom side as shown above

For technical questions, contact: powerictechsupport@vishay.com
THIS DOCUMENT IS SUBJECT TO CHANGE WITHOUT NOTICE. THE PRODUCTS DESCRIBED HEREIN AND THIS DOCUMENT ARE SUBJECT TO SPECIFIC DISCLAIMERS, SET FORTH AT www.vishay.com/doc?91000

Step 4: V_{DD}/PV_{CC} Input Filter

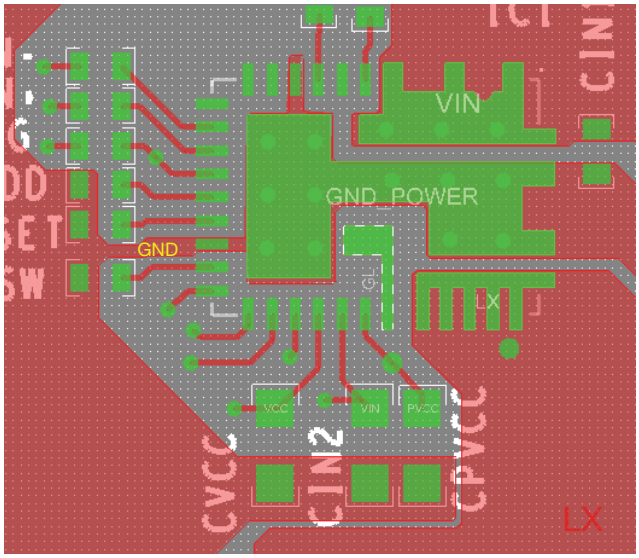

Fig. 33

1. C_{VDD} and C_{PVCC} caps should be placed close to the IC to filter noise and provide maximum instantaneous driver current for low side MOSFET during switching cycle

Step 5: BOOT Resistor and Capacitor Placement

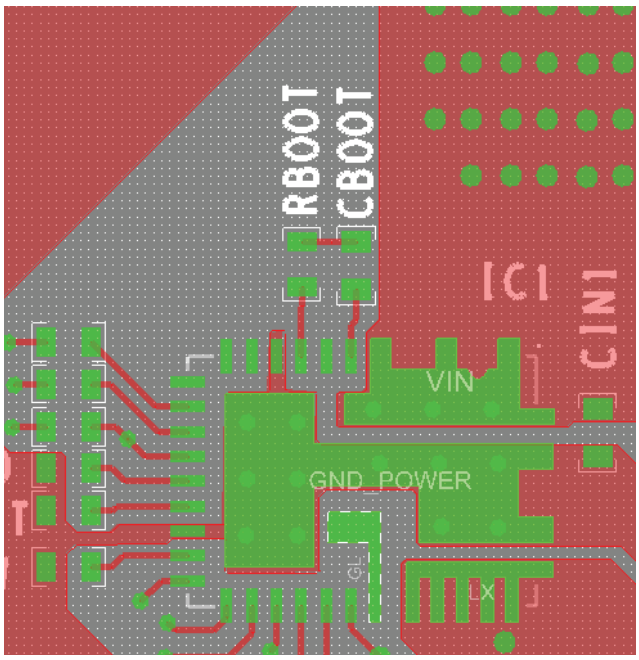

Fig. 34

1. These components need to be placed very close to SiC454, right between PHASE (pin 4) and BOOT (pin 6)
2. To reduce parasitic inductance, chip size 0402 can be used

Step 6: Signal Routing

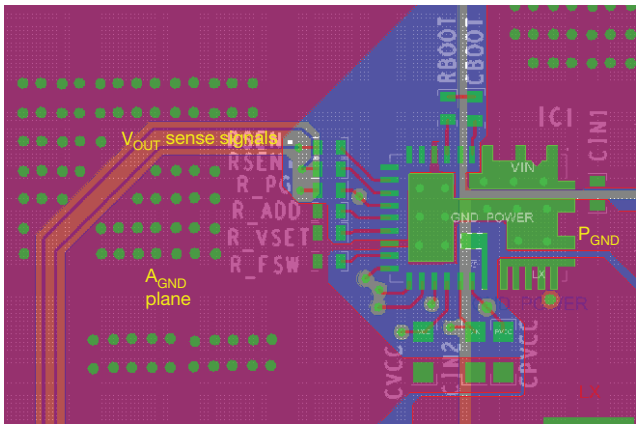

Fig. 35

1. Separate the small analog signal from high current path. As shown above, the high current paths with high dv/dt, di/dt are placed on the right side of the IC, while the small control signals are placed on the left side of the IC. All the components for small analog signal should be placed closer to IC with minimum trace length
2. Pin 16 is considered as IC analog ground, which should have single connection to power ground. The A_{GND} ground plane connected with pin 16 helps to keep A_{GND} quite and improve noise immunity
3. V_{sen+} / V_{sen-} differential analog signal pair should layout using minimum clearance. Also, the differential pair should be far away from V_{SWH} node and other signals throughout the length of the trace. Ground shield is highly recommended

For technical questions, contact: powerictechsupport@vishay.com
THIS DOCUMENT IS SUBJECT TO CHANGE WITHOUT NOTICE. THE PRODUCTS DESCRIBED HEREIN AND THIS DOCUMENT ARE SUBJECT TO SPECIFIC DISCLAIMERS, SET FORTH AT www.vishay.com/doc?91000

Step 7: Adding Thermal Relief Vias and Duplicate Power Path Plane

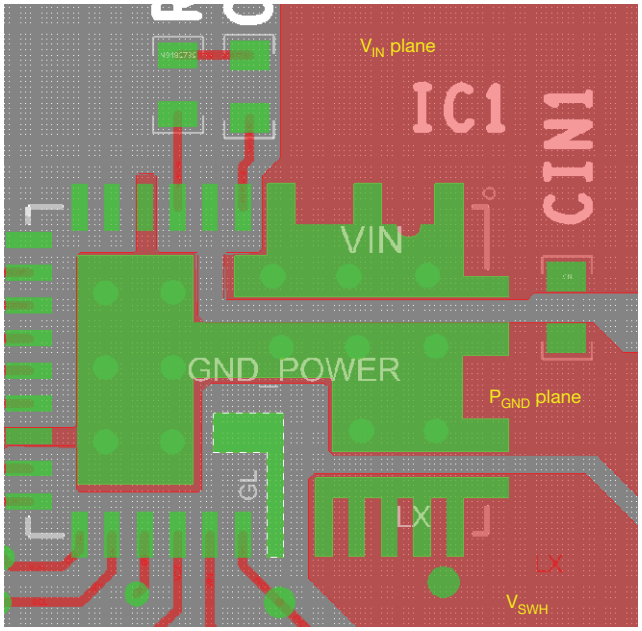

Fig. 36

1. Thermal relief Vias can be added on the V_{IN} and P_{GND} pads to utilize inner layers for high current and thermal dissipation
2. To achieve better thermal performance, additional Vias can be put on V_{IN} plane and P_{GND} plane. It is also necessary to duplicate the V_{IN} and ground plane at bottom layer to maximize the power dissipation capability from PCB
3. V_{SWH} pad is a noise source and not recommended to put Vias on this pad
4. 8 mil drill for pads and 10 mils drill for plane can be the optional Via size. The Vias on pad may drain solder during assembly and cause assembly issue. Please consult with the assembly house for guideline

Step 8: Ground Layer

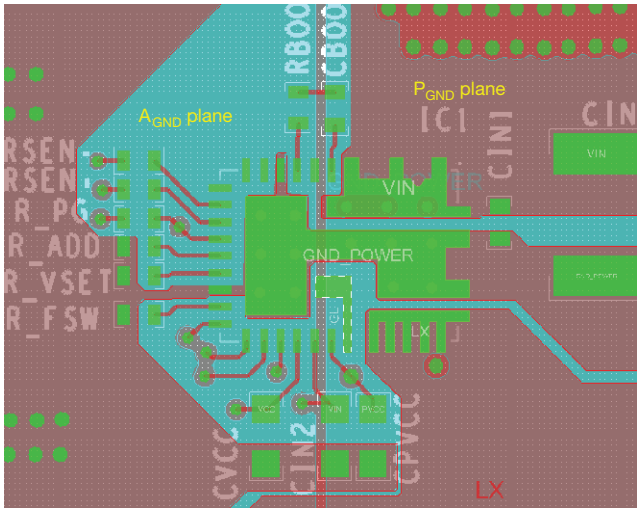

Fig. 37

1. It is recommended to make the whole inner 1 layer (next to top layer) ground plane
2. This ground plane provides shielding between noise source on top layer and signal trace within inner layer
3. The ground plane can be broken into two section as power ground and analogue ground

THIS DOCUMENT IS SUBJECT TO CHANGE WITHOUT NOTICE. THE PRODUCTS DESCRIBED HEREIN AND THIS DOCUMENT ARE SUBJECT TO SPECIFIC DISCLAIMERS, SET FORTH AT www.vishay.com/doc?91000

PRODUCT SUMMARY	
Part number	SiC454
Description	4.5 V to 20 V input 12 A microBUCK DC/DC converter with PMBus
Input voltage min. (V)	4.5
Input voltage max. (V)	20
Output voltage min. (V)	0.3
Output voltage max. (V)	12
Continuous current (A)	12
Switch frequency min. (kHz)	300
Switch frequency max. (kHz)	1500
Pre-bias operation (yes / no)	Yes
Internal bias reg. (yes / no)	Yes
Compensation	Internal
Enable (yes / no)	Yes
P_{GOOD} (yes / no)	Yes
Over current protection	Yes
Protection	OVP, OCP, UVP/SCP, OTP, UVLO
Light load mode	Yes
Peak efficiency (%)	98
Package type	PowerPAK MLP29-55
Package size (W, L, H) (mm)	5.0 x 5.0 x 0.75
Status code	1
Product type	microBUCK
Applications	Datacenter, cloud computing, industrial, telecom

Vishay Siliconix maintains worldwide manufacturing capability. Products may be manufactured at one of several qualified locations. Reliability data for Silicon Technology and Package Reliability represent a composite of all qualified locations. For related documents such as package / tape drawings, part marking, and reliability data, see www.vishay.com/ppg?63042.

THIS DOCUMENT IS SUBJECT TO CHANGE WITHOUT NOTICE. THE PRODUCTS DESCRIBED HEREIN AND THIS DOCUMENT ARE SUBJECT TO SPECIFIC DISCLAIMERS, SET FORTH AT www.vishay.com/doc?91000

Disclaimer

ALL PRODUCT, PRODUCT SPECIFICATIONS AND DATA ARE SUBJECT TO CHANGE WITHOUT NOTICE TO IMPROVE RELIABILITY, FUNCTION OR DESIGN OR OTHERWISE.

Vishay Intertechnology, Inc., its affiliates, agents, and employees, and all persons acting on its or their behalf (collectively, “Vishay”), disclaim any and all liability for any errors, inaccuracies or incompleteness contained in any datasheet or in any other disclosure relating to any product.

Vishay makes no warranty, representation or guarantee regarding the suitability of the products for any particular purpose or the continuing production of any product. To the maximum extent permitted by applicable law, Vishay disclaims (i) any and all liability arising out of the application or use of any product, (ii) any and all liability, including without limitation special, consequential or incidental damages, and (iii) any and all implied warranties, including warranties of fitness for particular purpose, non-infringement and merchantability.

Statements regarding the suitability of products for certain types of applications are based on Vishay's knowledge of typical requirements that are often placed on Vishay products in generic applications. Such statements are not binding statements about the suitability of products for a particular application. It is the customer's responsibility to validate that a particular product with the properties described in the product specification is suitable for use in a particular application. Parameters provided in datasheets and / or specifications may vary in different applications and performance may vary over time. All operating parameters, including typical parameters, must be validated for each customer application by the customer's technical experts. Product specifications do not expand or otherwise modify Vishay's terms and conditions of purchase, including but not limited to the warranty expressed therein.

Hyperlinks included in this datasheet may direct users to third-party websites. These links are provided as a convenience and for informational purposes only. Inclusion of these hyperlinks does not constitute an endorsement or an approval by Vishay of any of the products, services or opinions of the corporation, organization or individual associated with the third-party website. Vishay disclaims any and all liability and bears no responsibility for the accuracy, legality or content of the third-party website or for that of subsequent links.

Except as expressly indicated in writing, Vishay products are not designed for use in medical, life-saving, or life-sustaining applications or for any other application in which the failure of the Vishay product could result in personal injury or death. Customers using or selling Vishay products not expressly indicated for use in such applications do so at their own risk. Please contact authorized Vishay personnel to obtain written terms and conditions regarding products designed for such applications.

No license, express or implied, by estoppel or otherwise, to any intellectual property rights is granted by this document or by any conduct of Vishay. Product names and markings noted herein may be trademarks of their respective owners.

© 2023 VISHAY INTERTECHNOLOGY, INC. ALL RIGHTS RESERVED