Printed Circuit Dip Solder Connector

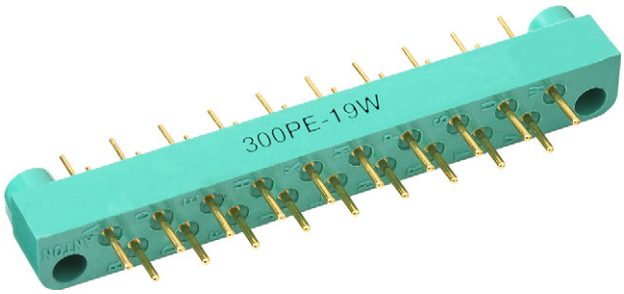

FEATURES

- Right angle or straight through dip solder terminals
- Threaded mounting studs
- Male contacts molded in
- Mating connector has solder cup or dip solder terminals
- Female contacts float to aid in alignment and resist vibration
- Permanent mounting provides greater reliability
- Polarization provided by contact arrangement and guide pin location
- Meets applicable paragraphs of MIL-C-55302

MATERIAL SPECIFICATIONS

Contact Pin: phosphor bronze

Contact Socket: phosphor bronze

Contact Plating: gold plated

Guide Pins: stainless steel, passivated

Standard Body: glass-filled diallyl phthalate per MIL-M-14, type SDG-F green; other body material supplied upon request

APPLICATIONS

Where permanent mounting of male connector to printed circuit board is required with mating female connector available.

ELECTRICAL SPECIFICATIONS

Current Rating: 7.5 A

Breakdown Voltage:
at sea level: 3600 V_{RMS}
at 70 000 feet: 975 V_{RMS}

PHYSICAL SPECIFICATIONS

Number of Contacts: 15, 19, and 25

Contact Spacing: 0.250", staggered rows provide a 0.125" grid

Contact Gauge: #20 AWG

Minimum Creepage Path between Contacts: 0.16"

Minimum Air Space between Contacts: 0.11"

ORDERING INFORMATION

300	PR	-15	W
MODEL	CONTACTS	NUMBER OF CONTACTS	WITHOUT GUIDES
	S = Socket with solder cup PE = Pin with dip solder terminals SE = Socket with dip solder terminals PR = Pin with right angle dip solder terminals		(optional on S, PE, and SE models only)

MODEL NUMBERS AVAILABLE

15 CONTACTS	19 CONTACTS	25 CONTACTS
300PE-15	300PE-19	300PE-25
300PE-15W	300PE-19W	300PE-25W
300PR-15	300PR-19	300PR-25
	300S-19	
	300S-19W	
	300SE-19	
	300SE-19W	

For technical questions, contact: connectors@vishay.com
THIS DOCUMENT IS SUBJECT TO CHANGE WITHOUT NOTICE. THE PRODUCTS DESCRIBED HEREIN AND THIS DOCUMENT ARE SUBJECT TO SPECIFIC DISCLAIMERS, SET FORTH AT www.vishay.com/doc?91000

DIMENSIONS in inches (millimeters)

300PR

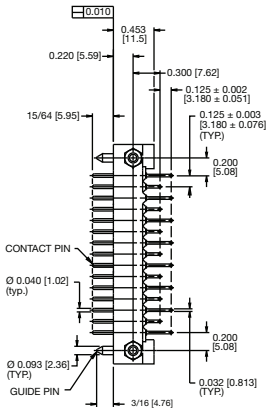

TYPICAL SIDE VIEW

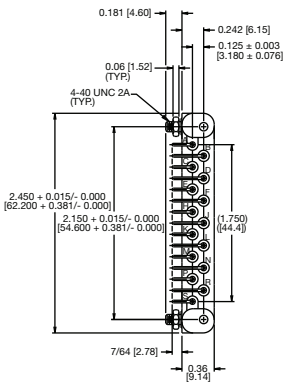

15 CONTACTS

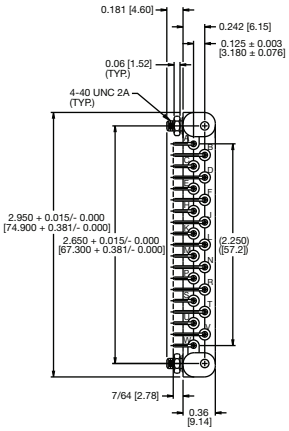

19 CONTACTS

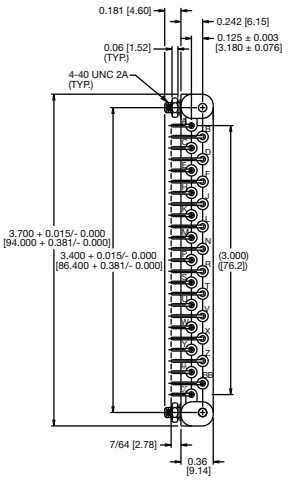

25 CONTACTS

300S

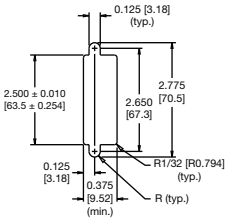

PANEL CUTOUT

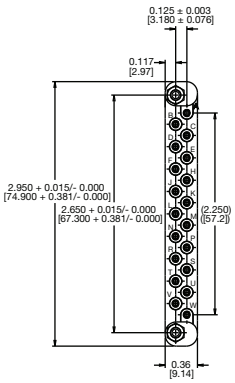

19 CONTACTS

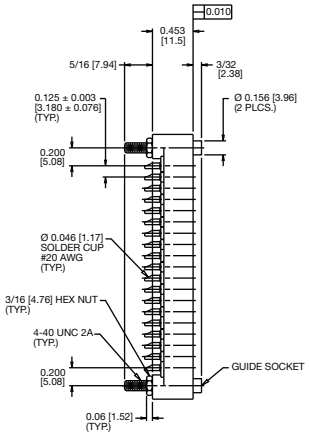

TYPICAL SIDE VIEW

300SE

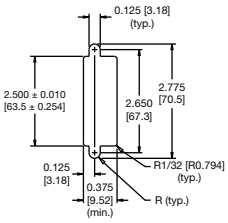

PANEL CUTOUT

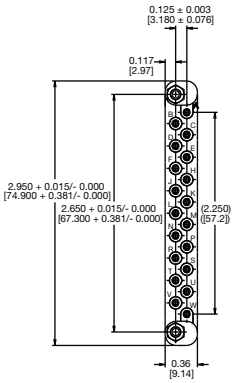

19 CONTACTS

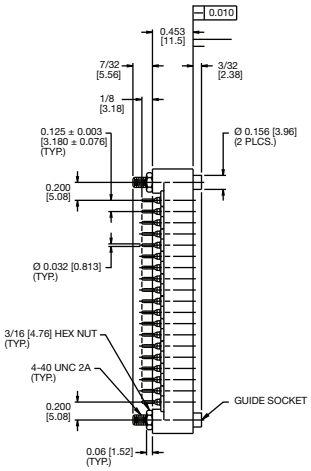

TYPICAL SIDE VIEW

For technical questions, contact: connectors@vishay.com

THIS DOCUMENT IS SUBJECT TO CHANGE WITHOUT NOTICE. THE PRODUCTS DESCRIBED HEREIN AND THIS DOCUMENT ARE SUBJECT TO SPECIFIC DISCLAIMERS, SET FORTH AT www.vishay.com/doc?91000

DIMENSIONS in inches (millimeters)

300PE

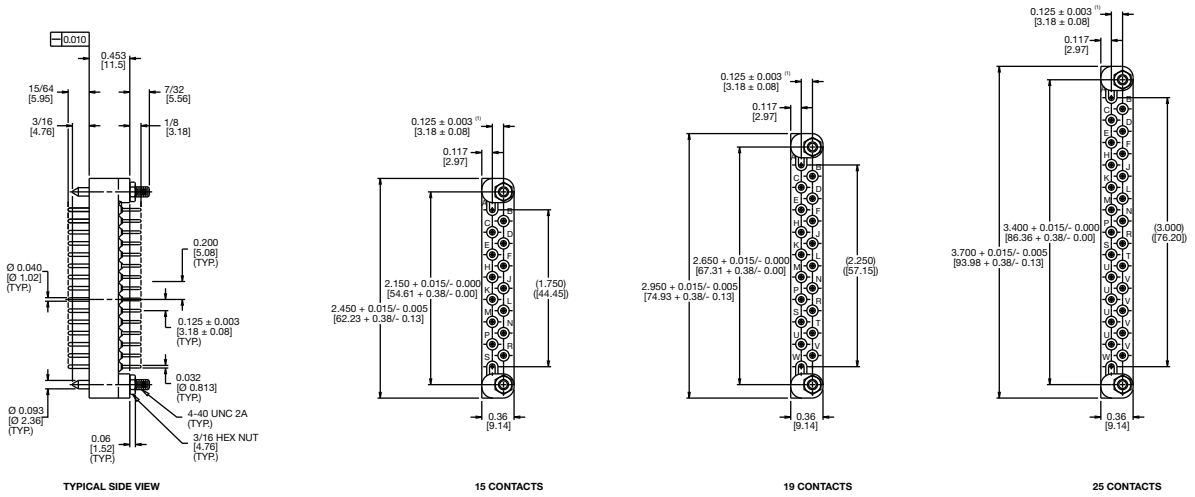

Note

(1) 0.003" tolerance applies to contact to contact spacing, contact to mounting hole spacing has a tolerance of 0.035"

For technical questions, contact: connectors@vishay.com

THIS DOCUMENT IS SUBJECT TO CHANGE WITHOUT NOTICE. THE PRODUCTS DESCRIBED HEREIN AND THIS DOCUMENT ARE SUBJECT TO SPECIFIC DISCLAIMERS, SET FORTH AT www.vishay.com/doc?91000

Disclaimer

ALL PRODUCT, PRODUCT SPECIFICATIONS AND DATA ARE SUBJECT TO CHANGE WITHOUT NOTICE TO IMPROVE RELIABILITY, FUNCTION OR DESIGN OR OTHERWISE.

Vishay Intertechnology, Inc., its affiliates, agents, and employees, and all persons acting on its or their behalf (collectively, “Vishay”), disclaim any and all liability for any errors, inaccuracies or incompleteness contained in any datasheet or in any other disclosure relating to any product.

Vishay makes no warranty, representation or guarantee regarding the suitability of the products for any particular purpose or the continuing production of any product. To the maximum extent permitted by applicable law, Vishay disclaims (i) any and all liability arising out of the application or use of any product, (ii) any and all liability, including without limitation special, consequential or incidental damages, and (iii) any and all implied warranties, including warranties of fitness for particular purpose, non-infringement and merchantability.

Statements regarding the suitability of products for certain types of applications are based on Vishay's knowledge of typical requirements that are often placed on Vishay products in generic applications. Such statements are not binding statements about the suitability of products for a particular application. It is the customer's responsibility to validate that a particular product with the properties described in the product specification is suitable for use in a particular application. Parameters provided in datasheets and / or specifications may vary in different applications and performance may vary over time. All operating parameters, including typical parameters, must be validated for each customer application by the customer's technical experts. Product specifications do not expand or otherwise modify Vishay's terms and conditions of purchase, including but not limited to the warranty expressed therein.

Hyperlinks included in this datasheet may direct users to third-party websites. These links are provided as a convenience and for informational purposes only. Inclusion of these hyperlinks does not constitute an endorsement or an approval by Vishay of any of the products, services or opinions of the corporation, organization or individual associated with the third-party website. Vishay disclaims any and all liability and bears no responsibility for the accuracy, legality or content of the third-party website or for that of subsequent links.

Vishay products are not designed for use in life-saving or life-sustaining applications or any application in which the failure of the Vishay product could result in personal injury or death unless specifically qualified in writing by Vishay. Customers using or selling Vishay products not expressly indicated for use in such applications do so at their own risk. Please contact authorized Vishay personnel to obtain written terms and conditions regarding products designed for such applications.

No license, express or implied, by estoppel or otherwise, to any intellectual property rights is granted by this document or by any conduct of Vishay. Product names and markings noted herein may be trademarks of their respective owners.

© 2025 VISHAY INTERTECHNOLOGY, INC. ALL RIGHTS RESERVED

THIS DOCUMENT IS SUBJECT TO CHANGE WITHOUT NOTICE. THE PRODUCTS DESCRIBED HEREIN AND THIS DOCUMENT ARE SUBJECT TO SPECIFIC DISCLAIMERS, SET FORTH AT www.vishay.com/doc?91000