Power Resistors Cooled by Auxiliary Heatsink (Not Supplied) Thick Film Technology

FEATURES

- System without external radiation
- High power / volume ratio
- Non-inductive
- M4 screw-on outputs (M5 on option)
- Easy assembly, self-calibrated pressure (400 N)
- Material categorization: for definitions of compliance please see www.vishay.com/doc?99912

RoHS COMPLIANT

LINKS TO ADDITIONAL RESOURCES

3D Models

STANDARD ELECTRICAL SPECIFICATIONS

MODEL	RESISTANCE RANGE Ω	MAX. RATED POWER $BC_{85\,°C}$ W	TOLERANCE ± %	TEMPERATURE COEFFICIENT ± ppm/°C	E-SERIES OHMIC VALUES (3)
RCEC 750	0.15 (2) to 0.49	800	10, 5	700 (typical)	E24
	0.5 to 3	800	10, 5 (1)	300 (typical)	E24
	3.3 to 1M	800	10, 5 (1)	100 (typical)	E24

Notes

(1) ± 2 % or ± 1 % on special request for limited resistance value and with reduction of maximum power and pulse rating (contact us for details)

(2) Current limitation for 0.15 Ω: 30 A_{RMS} max.

(3) Other on request

MECHANICAL SPECIFICATIONS

UL 94 flame classifications	Material complies with the standard UL 94 V-0
Resistive element	Cermet
Substrate	Alumina
Encapsulation	Resin filled in case

TECHNICAL SPECIFICATIONS

PARAMETER	750	750HV
Operating temperature range	-55 °C to +155 °C	
Maximum operating voltage between terminals	5000 V_{DC}	
Dielectric strength V_{RMS} (50 Hz / 1 min)	7000 V (other case contact us)	12 000 V (other case contact us)
Creeping distance	> 42 mm	> 75 mm
Clearance distance	> 12 mm	> 30 mm
CTI index	> 600	
Partial discharge	< 10 pC at 5000 V_{eff} (≤ 10 pC at 7000 V_{eff} on request) Other cases: contact us	
Capacitance / ground (frequency 10 kHz)	120 pF (typical)	
Self-inductance (frequency 10 kHz)	< 40 nH (typical)	
Insulation resistance	> 100 GΩ at 1000 V_{DC}	
Weight	120 g (maximum)	

For technical questions, contact: mcbfixedresistors@vishay.com

THIS DOCUMENT IS SUBJECT TO CHANGE WITHOUT NOTICE. THE PRODUCTS DESCRIBED HEREIN AND THIS DOCUMENT ARE SUBJECT TO SPECIFIC DISCLAIMERS, SET FORTH AT www.vishay.com/doc?91000

DIMENSIONS in millimeters

STANDARD	HV
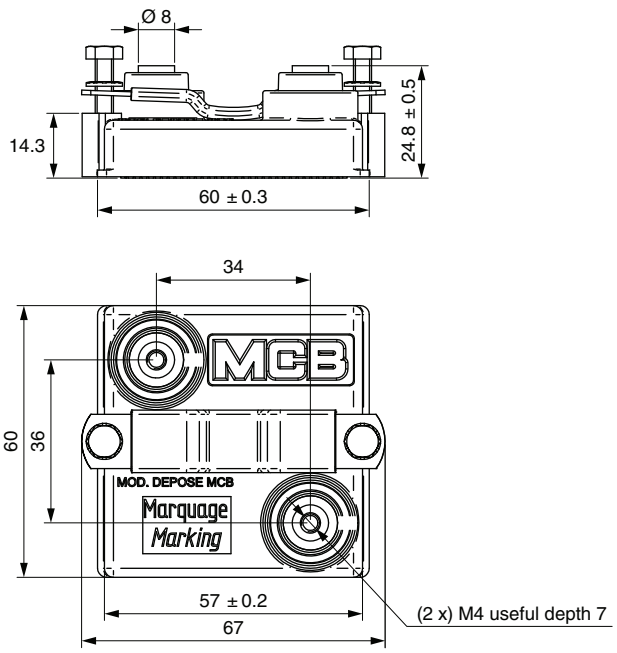	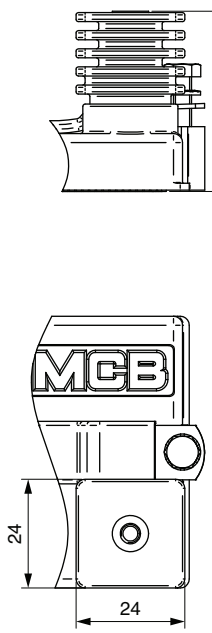

PERFORMANCES

TESTS	CONDITIONS	REQUIREMENTS	TYPICAL VALUES
Damp heat	56 days, 40 °C, 93 % RH (IEC 60068-2-78)	± (1 % + 0.05 Ω) Insul. > 10^3 MΩ	< 0.2 %
Climatic sequence	Low temperature: -55 °C High temperature 150 °C Number of cycles: 21 Exposure time: 3 hours for high temperature and 2 hours for low temperature (IEC 60068-2-14 Nb)	± (1 % + 0.05 Ω)	< 0.2 %
Rapid change of temperature	Low temperature: -55 °C High temperature: 125 °C Number of cycles: 5 Exposure time: 30 min Manual transition time: 2 min. (IEC 60068-2-14 Na)	± (0.25 % + 0.05 Ω)	< 0.1 %
Shock	Shock type: half-sine Amplitude: 100 m/s^2 Duration: 6 ms Frequency: 1 bump per second Number of bumps: 3000 Directions tested: 6 (500 bumps in each direction) (IEC 600068-2-29 test Eb)	± (0.25 % + 0.05 Ω)	< 0.2 %

For technical questions, contact: mcbfixedresistors@vishay.com
THIS DOCUMENT IS SUBJECT TO CHANGE WITHOUT NOTICE. THE PRODUCTS DESCRIBED HEREIN AND THIS DOCUMENT ARE SUBJECT TO SPECIFIC DISCLAIMERS, SET FORTH AT www.vishay.com/doc?91000

PERFORMANCES			
TESTS	**CONDITIONS**	**REQUIREMENTS**	**TYPICAL VALUES**
Vibrations	Random frequency range: from 10 Hz to 200 Hz / ASD: 0.0104 g^2/Hz from 200 Hz to 500 Hz / ASD: 0.00312 g^2/Hz Overall acceleration level: 1.87 G_{RMS} Axis tested: 3 (X, Y, and Z) / 150 min per axis (IEC 60068-2-64)	± (0.25% + 0.05 Ω)	< 0.2 %
Terminal strength	2 Nm / 200 N	± (1 % + 0.05 Ω)	< 0.1 %
Endurance	1000 h Pn 90 min on / 30 min off with $\theta_{bottom\ case}$ = 85 °C (IEC 60115-1)	± (1 % + 0.05 Ω)	< 0.5 %

Note

(1) All tests were done in Vishay MCB laboratory conditions

ENERGY	
R ≤ 390 Ω	**R > 390 Ω**
Repetitive operation = 8 J Pulse τ = 50 µs	Repetitive operation = 4 J Pulse τ = 50 µs
Accidental operation = 20 J Pulse τ = 50 µs 120 pulses	Other τ values: consult us

DISSIPATION

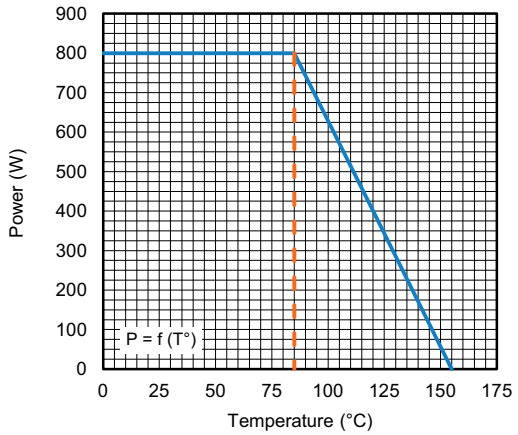

Permanent Applicable Power (W) as a Function of Bottom Case Temperature (°C)

OVERLOAD

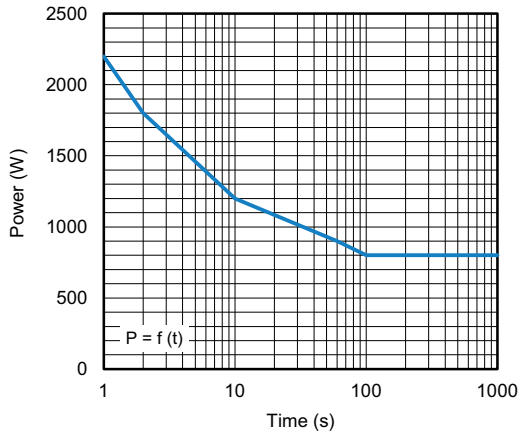

Intermittent Overload (Exceptional Operation)
Bottom Case Temperature +85 °C

For technical questions, contact: mcbfixedresistors@vishay.com
THIS DOCUMENT IS SUBJECT TO CHANGE WITHOUT NOTICE. THE PRODUCTS DESCRIBED HEREIN AND THIS DOCUMENT ARE SUBJECT TO SPECIFIC DISCLAIMERS, SET FORTH AT www.vishay.com/doc?91000

ASSEMBLY

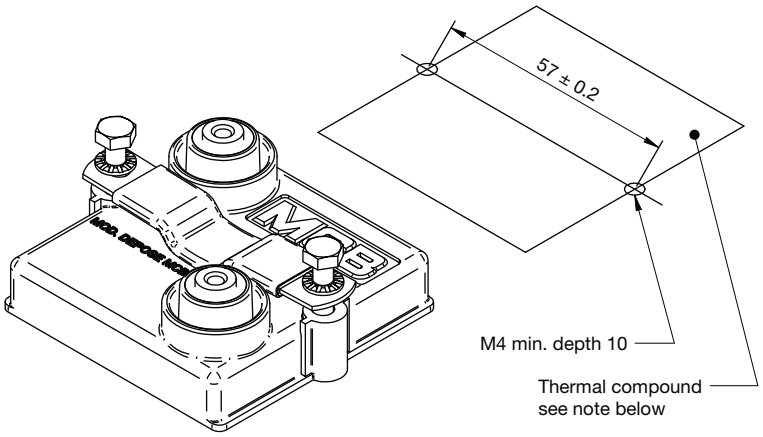

Tightening torque for mechanical fixation	1.8 Nm to 2 Nm
Tightening torque for electrical connections	1.8 Nm to 2 Nm

COOLING

The temperature of the heatsink may be maintained at the specified values with:

- Forced air ventilation or internal circulation of a liquid cooling
- Heatsink contact surface: < Ra 6.3 μ
- Evenness defect: 0.05 mm max.
- Surface temperature gradient (isotherm): 20 °C max.
- Thermal compound not supplied (resistance < 0.025 °C/W / 0.05 mm preconized)
- Mounting recommendation: www.vishay.com/doc?32558

The user must select the thermal resistance of the heatsink according to the power applied.

TERMINAL OPTIONS

- Electrical terminals M5
- Other terminal size
- Output cable

ORDERING INFORMATION

RCEC	750	HV	100K	5 %	XXX	BO15
MODEL	STYLE	TERMINALS	RESISTANCE VALUE	TOLERANCE	CUSTOM DESIGN	PACKAGING
				± 5 % ± 10 % Other on request	Optional On request: special value, tolerance shape, M5 terminals, etc.	

For technical questions, contact: mcbfixedresistors@vishay.com
THIS DOCUMENT IS SUBJECT TO CHANGE WITHOUT NOTICE. THE PRODUCTS DESCRIBED HEREIN AND THIS DOCUMENT ARE SUBJECT TO SPECIFIC DISCLAIMERS, SET FORTH AT www.vishay.com/doc?91000

GLOBAL PART NUMBER INFORMATION

R	C	E	C	7	5	0	H	V	5	R	6	0	K	B			
1							2		3				4	5	6		

1	2	3	4	5	6
GLOBAL MODEL	TERMINAL	OHMIC VALUE	TOLERANCE	PACKAGING	INDUSTRIALIZATION NUMBER
RCEC 750	**(if applicable)** **Standard (no digit)** = dielectric strength 7 kV + partial discharge **HV** = dielectric strength 12 kV + partial discharge	**The first three digits are significant figures and the last specifies the number of zeros to follow, R designates decimal point.** **4702 = 47 kΩ** **1000 = 100 Ω** **47R0 = 47 Ω** **4R70 = 4.7 Ω**	**J = 5 %** **K = 10 %**	**B = box** (24 pcs for standard, 15 pcs for HV)	**3 specific digits (if applicable)**

For technical questions, contact: mcbfixedresistors@vishay.com
THIS DOCUMENT IS SUBJECT TO CHANGE WITHOUT NOTICE. THE PRODUCTS DESCRIBED HEREIN AND THIS DOCUMENT ARE SUBJECT TO SPECIFIC DISCLAIMERS, SET FORTH AT www.vishay.com/doc?91000

Disclaimer

ALL PRODUCT, PRODUCT SPECIFICATIONS AND DATA ARE SUBJECT TO CHANGE WITHOUT NOTICE TO IMPROVE RELIABILITY, FUNCTION OR DESIGN OR OTHERWISE.

Vishay Intertechnology, Inc., its affiliates, agents, and employees, and all persons acting on its or their behalf (collectively, “Vishay”), disclaim any and all liability for any errors, inaccuracies or incompleteness contained in any datasheet or in any other disclosure relating to any product.

Vishay makes no warranty, representation or guarantee regarding the suitability of the products for any particular purpose or the continuing production of any product. To the maximum extent permitted by applicable law, Vishay disclaims (i) any and all liability arising out of the application or use of any product, (ii) any and all liability, including without limitation special, consequential or incidental damages, and (iii) any and all implied warranties, including warranties of fitness for particular purpose, non-infringement and merchantability.

Statements regarding the suitability of products for certain types of applications are based on Vishay's knowledge of typical requirements that are often placed on Vishay products in generic applications. Such statements are not binding statements about the suitability of products for a particular application. It is the customer's responsibility to validate that a particular product with the properties described in the product specification is suitable for use in a particular application. Parameters provided in datasheets and / or specifications may vary in different applications and performance may vary over time. All operating parameters, including typical parameters, must be validated for each customer application by the customer's technical experts. Product specifications do not expand or otherwise modify Vishay's terms and conditions of purchase, including but not limited to the warranty expressed therein.

Hyperlinks included in this datasheet may direct users to third-party websites. These links are provided as a convenience and for informational purposes only. Inclusion of these hyperlinks does not constitute an endorsement or an approval by Vishay of any of the products, services or opinions of the corporation, organization or individual associated with the third-party website. Vishay disclaims any and all liability and bears no responsibility for the accuracy, legality or content of the third-party website or for that of subsequent links.

Vishay products are not designed for use in life-saving or life-sustaining applications or any application in which the failure of the Vishay product could result in personal injury or death unless specifically qualified in writing by Vishay. Customers using or selling Vishay products not expressly indicated for use in such applications do so at their own risk. Please contact authorized Vishay personnel to obtain written terms and conditions regarding products designed for such applications.

No license, express or implied, by estoppel or otherwise, to any intellectual property rights is granted by this document or by any conduct of Vishay. Product names and markings noted herein may be trademarks of their respective owners.

© 2025 VISHAY INTERTECHNOLOGY, INC. ALL RIGHTS RESERVED

THIS DOCUMENT IS SUBJECT TO CHANGE WITHOUT NOTICE. THE PRODUCTS DESCRIBED HEREIN AND THIS DOCUMENT ARE SUBJECT TO SPECIFIC DISCLAIMERS, SET FORTH AT www.vishay.com/doc?91000